Limited Warranty

Steel Fence Systems

Skilled craftsmen, to meet the highest standards of workmanship, manufacture our Ornamental Steel Fence Systems from the highest quality materials. All Loc LLC warrants our steel fence products to be free from defects in workmanship or materials for 15 years.

Our state-of-the-art polyester powder-coated surface on all steel products is guaranteed under normal and proper usage, against cracking, peeling, chipping, blistering or corroding for the same amount of time. Normal and proper usage does not include physical damage, abrasion or exposure to salty environments to the protective coating of the products. Damage as a result of improper installation is not included.

Should any ornamental steel fence manufactured by All Loc LLC fail in accordance with any of the above conditions, All Loc LLC warrants to the original purchaser their redemption through replacement or renewal. The decision as to which method of redemption is allowed is solely at the discretion of All Loc LLC. Notice of failure under the conditions of this warranty shall be sent to All Loc LLC or it authorized representative, in writing, together with proof of purchase and shall specify the nature of the defect and when it was first observed. Should the fence be improperly installed, All Loc LLC shall not be responsible for guaranteed performance or appearance of the material. Neither does this guarantee apply when failure or damage is due to improper use or application, abuse or misuse, vandalism or acts of God. All Loc LLC Fence Products reserves the right to inspect the material to determine validity of the claim.

Upon validation of the claim by All Loc LLC Fence Products or its authorized representative, replacement or renewal shall be made by All Loc. Reimbursement for the costs of removal and installation of materials are not included in the guarantee, nor will All Loc provide those services.

The above constitutes the complete warranty by the manufacturer. No other agreement, written or implied, is valid. All Loc LLC does not authorize any other person or agent to make any other express warranties. All Loc LLC neither assumes nor authorizes any other person or agent to assume any other liability in connection with All Loc LLC Steel Fence Systems. Some jurisdictions do not allow limitations on how long an implied warranty lasts, nor do they allow an exclusion or limitation of incidental or consequential damages; Therefore, the limitations and exclusions noted herein may not apply.

Customer Name _____

Dealer Name _____

Purchase Date _____

All Loc L.L.C.

SECTION 32 31 19
Steel Ornamental Picket Fencing

PART 1 GENERAL

1.01 SECTION INCLUDES

A. Steel Ornamental picket fencing.

1.02 RELATED SECTIONS

A. Section 32 13 00 - Paving and Surfacing
B. Section 03 06 30 - Cast-In-Place Concrete
C. Section 04 20 00 - Unit Masonry

1.03 SUBMITTALS

A. Changes in specifications may not be made after the published date of bid. All submittals of substitutions must be approved before bid date.

B. Shop drawing of fences and gates with all dimensions, details, and finishes. Drawings must include post foundations.

C. Product data: Manufacturer's catalog cuts indicating materials compliance that all conditions of the specifications have been met.

1.04 SPECIAL WARRANTY

Provide manufacturer’s standard limited warranty that its ornamental fence system is free from defects in material and workmanship including cracking, peeling, blistering and corroding for a period of 15 years from the date of purchase.

PART 2 PRODUCTS

2.01 MANUFACTURER

A. ALL LOC Fence - **Sapulpa, Oklahoma** 74067. (Phone 918-697-5307)(Fax 918-224-8813) POC Jon Richardson. Products from other qualified manufacturers who have five years or more experience manufacturing steel ornamental picket fencing will be considered by the architect as equal if approved in writing 10 days prior to biddings, and they meet all specifications for design, size gauge of metal parts and fabrication.

B. Picket fences and gates must be obtained from a single source.

2.02 ORNAMENTAL PICKET FENCE

Style: ___APOLLO S – BUCKINGHAM STYLE 3-RAIL, 4-RAIL_____

Height: __Varies_____

A. Pickets: Galvanized square steel tubular members manufactured per ASTM A-924/A-924M, having a 45,000 psi (310 MPa) yield strength and hot-dip galvanized per ASTM A653/A653M with a G90 zinc coating, 0.90 oz/ft^2 (0.27 kg/M^2. Minimum size pickets _____1"____(_____25___mm). Space pickets 3-15/16" maximum (100 mm) face to face. Attach pickets to each rail with Slide Lock System (patent pending). Minimum gauge wall thickness __16___gauge [_____0.065"(_____178__mm)].

B. Rails: 1-3/4" (44mm) x 1-3/4" (44mm), 14 gauge [0.083" (2.07mm)] thick galvanized steel square rail per ASTM A-653/A-653M, having a 50,000 psi (344 MPa) yield strength and G90 zinc coating, 0.90 oz/fl^2 (0.27 kg/M^2). Punch rails to receive pickets and attach rails to rail brackets with, 1/4" (6 mm) industrial bolt.

C. Posts: Made of galvanized steel tube, galvanized inside and outside, produced per ASTM A-653/653M -G90 zinc coating, 0.90 oz/fl^2 (o.27 kg/M^2), steel to have 45,000 psi (310 MPa) yield strength. Post size __4"___(_____mm). Posts to have 11 gauge wall thickness "(_____mm) weighing 6.69 lb/ft (_____Kg/m)

D. Finish: All primary components receive a thorough cleaning and pre-treatment – This 12-step process consists of 1.) Hot alkaline cleaner, 2.) Clear water rinse, 3.) Hot iron phosphate application, 4.) Clear water rinse, 5.) Z-153 sealer application, 6.) Ring rinse, 7.) Deionized water rinse, 8.)Dry off oven heat at 425° F, 9.) Zinc enriched epoxy primer powder coat at 2-4 mils., 10.) Gel oven heat at 400° F, 11.) Ultra polyester finish powder coat at 2-4 mils., 12.) Final curing oven at 450° F Choose color- [Black] [Brown] [White] [Green] or [Almond].

2.03 ACCESSORIES

A. Grommets inserted into pre-punched holes in the rails and pickets inserted through the grommets so that the pre cut grove in the picket align with the Slide Lock Channel in the rail.

B. Assembled panel capable of supporting a 800 lb. load (applied at midspan) without permanent deformation.

C. Post Caps: Cast aluminum or malleable iron or formed steel manufactured to form a weather-tight closure. Caps to be _____ style on all posts. (Choose ball type or flat tops.)

D. Rings: Cast aluminum rings attached to rails by insertion of mounting block into upper rail. Ring to be secure and unremovable.

E. Finial Tops for Pickets: Cast aluminum, All Finials extend 6" (150 mm) above rail.

2.04 GATES

Ornamental picket swing gates (see section 32 31 19.13)
Ornamental picket cantilever slide gates (see section 32 31 19.14)

2.05 SETTING MATERIALS

A. Concrete: Minimum 28 day compressive strength of 3,000 psi (20 Mpa).

B. Flanged Post: Provide flanged base plates with 4 holes for surface mounting where indicated. (For wall mount or pad mount situations.)

PART 3 EXECUTION

3.01 EXAMINATION

A. Verify areas to receive fencing are completed to final grades and elevations.

B. Property lines and legal boundaries of work to be clearly established by the general contractor or property owner.

3.02 FENCE INSTALLATION

A. Install fence per manufacturer's recommendations.

B. Space posts uniformly at 96 " (2438mm) center to center unless instructed otherwise.

C. Set posts in concrete. Dig holes having a diameter 4 times the diameter of the post, and 6" (152 mm) deeper than the bottom of the post. Forms are not necessary or recommended. Crown concrete at top to shed water.

D. Check each post for vertical and top alignment.

E. Attach brackets using 1/4" (6 mm) carriage bolts with lock nuts.

3.03 CLEANING

A. Clean up debris and remove from the site.

WISCONSIN
MERVIN L. SNOWDEN
E-33244
TULSA
OK
PROFESSIONAL ENGINEER
10-18-07

DESIGN CRITERIA

CODE	IBC-2003
WIND SPEED	90 mph
IMPORTANCE FACTOR	0.87
EXPOSURE	"B"

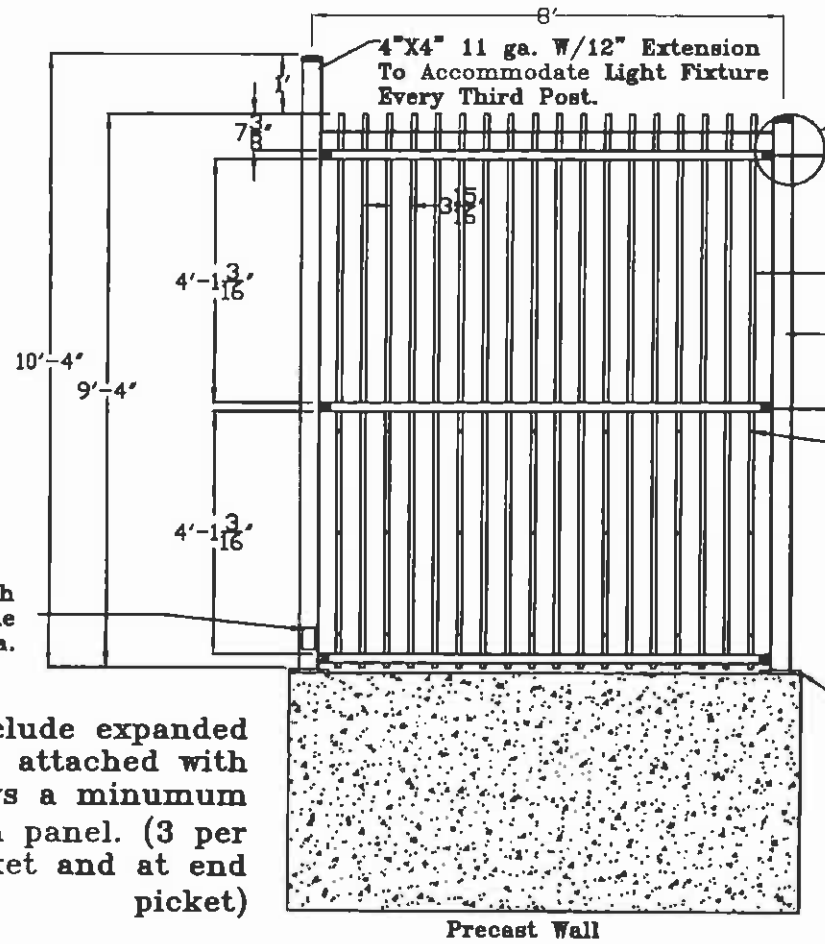

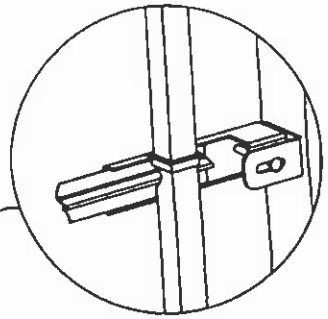

1-3/4" 14 ga. Rail

1" X 1" 16 ga. Picket

4" X 4" 11 ga. Post

1-3/4" 14 ga. Rail

3/4" Black Xylon Self Tapping Screw for Mesh

180 Deg. Barrel Hinges

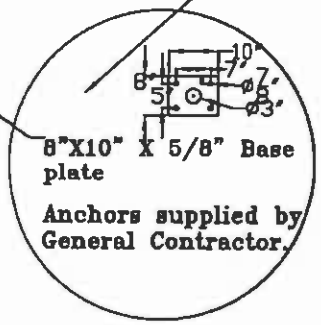

8"X10" X 5/8" Base plate

Anchors supplied by General Contractor.

Note: All Sections to include expanded metal mesh on interior, attached with black self tapping screws a minumum of 21 for a 4'X8' mesh panel. (3 per sheet every 3rd picket and at end picket)

Buckingham Caps 3-Rail 9'-4" X 8' Panel	By: JDT	All Loc Fence
	Date 10/12/07	
Menards Job EAU CLAIRE, WI	Rev: A	

Copyright © 2006 Ornamental Brass Works
All Rights Reserved

Product Detail

MENARDS®

STORE #3113
101 28TH AVENUE SE
MINOT,ND
58701-7179

PHONE: 701-857-8900
FAX: 701-857-8915

6' x 150' Geogrid
Series Number: Geogrid
Model Number: 1796003
Sku Number: 179-6003
Size: 6' x 150'

Product Features:

Retaining wall reinforcement fabric that helps secure soil when building taller retaining walls.

- High performance woven polyester
- Used for soil reinforcement
- Selected Option: 6' x 150' Geogrid

Delivery: Approximate delivery 12 days from order date.

*** Images may not represent exact colors or patterns**

If you would like to purchase this item please talk to a team member at the store, or call the store at 701-857-8900.

If you would like to find this item again look in the Building Materials Catalog
-Press "Search by Sku#"
-Type in 179-6003
-Press Enter

TENCATE
Mirafi

Soil Reinforcement

Miragrid® 2XT

Miragrid® 2XT geogrid is composed of high molecular weight, high tenacity polyester multifilament yarns which are woven in tension and finished with a PVC coating. Miragrid® 2XT geogrid is inert to biological degradation and resistant to naturally encountered chemicals, alkalis, and acids.

Mechanical Properties	Test Method	Unit	Minimum Average Roll Value	
			MD	CD
Tensile Strength (at ultimate)	ASTM D 6637	kN/m (lbs/ft)	29.2 (2000)	29.2 (2000)
Creep Reduced Strength	ASTM D 5262	kN/m (lbs/ft)	18.5 (1266)	18.5 (1266)
Long Term Allowable Design Load[1]	GRI GG-4(b)	kN/m (lbs/ft)	16.0 (1096)	16.0 (1096)

[1] NOTE: Long Term Allowable Design values are for sand, silt and clay

Physical Properties	Test Method	Unit	Typical Value
Grid Aperture Size (machine direction)	--	mm (in)	22.2 (0.875)
Grid Aperture Size (cross machine direction)	--	mm (in)	25.4 (1.0)
Mass/Unit Area	ASTM D 5261	g/m^2 (oz/yd^2)	254.3 (7.5)
Roll Dimensions (width x length)	--	m (ft)	1.8 (6) x 45.7 (150)
Roll Area	--	m^2 (yd^2)	82.3 (100)
Estimated Roll Weight	---	kg (lbs)	21 (47)

Disclaimer: TenCate assumes no liability for the accuracy or completeness of this information or for the ultimate use by the purchaser. TenCate disclaims any and all express, implied, or statutory standards, warranties or guarantees, including without limitation any implied warranty as to merchantability or fitness for a particular purpose or arising from a course of dealing or usage of trade as to any equipment, materials, or information furnished herewith. This document should not be construed as engineering advice.

TENCATE
materials that make a difference

FGS000116
ETQR14

Miragrid® 3XT

Miragrid® 3XT geogrid is composed of high molecular weight, high tenacity polyester multifilament yarns which are woven in tension and finished with a PVC coating. Miragrid® 3XT geogrid is inert to biological degradation and resistant to naturally encountered chemicals, alkalis, and acids.

Mechanical Properties	Test Method	Unit	Minimum Average Roll Value
			Machine Direction
Tensile Strength (at ultimate)	ASTM D6637	lbs/ft (kN/m)	3500 (51.1)
Tensile Strength (at 5% strain)	ASTM D6637	lbs/ft (kN/m)	1056 (15.4)
Creep Reduced Strength	ASTM D5262	lbs/ft (kN/m)	2215 (32.3)
Long Term Allowable Design Load[1]	GRI GG-4(b)	lbs/ft (kN/m)	1918 (28.0)

[1] NOTE: Long Term Allowable Design values are for sand, silt and clay

Physical Properties	Unit	Typical Value
Mass/Unit Area (ASTM D5261)	oz/yd^2 (g/m^2)	8.2 (278)
Roll Dimensions (width x length)	ft (m)	12 x 150 (3.6 x 46)
Roll Area	yd^2 (m^2)	200 (165)
Estimated Roll Weight	lbs (kg)	119 (54)

Disclaimer: TenCate assumes no liability for the accuracy or completeness of this information or for the ultimate use by the purchaser. TenCate disclaims any and all express, implied, or statutory standards, warranties or guarantees, including without limitation any implied warranty as to merchantability or fitness for a particular purpose or arising from a course of dealing or usage of trade as to any equipment, materials, or information furnished herewith. This document should not be construed as engineering advice.

© 2012 TenCate Geosynthetics Americas
Miragrid® is a registered trademark of Nicolon Corporation

Made in USA

materials that make a difference

FGS000005
ETQR20

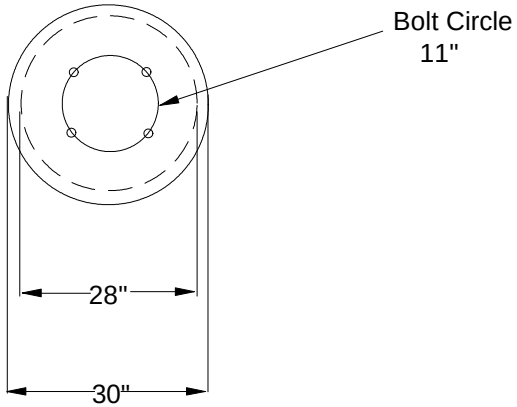

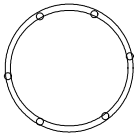

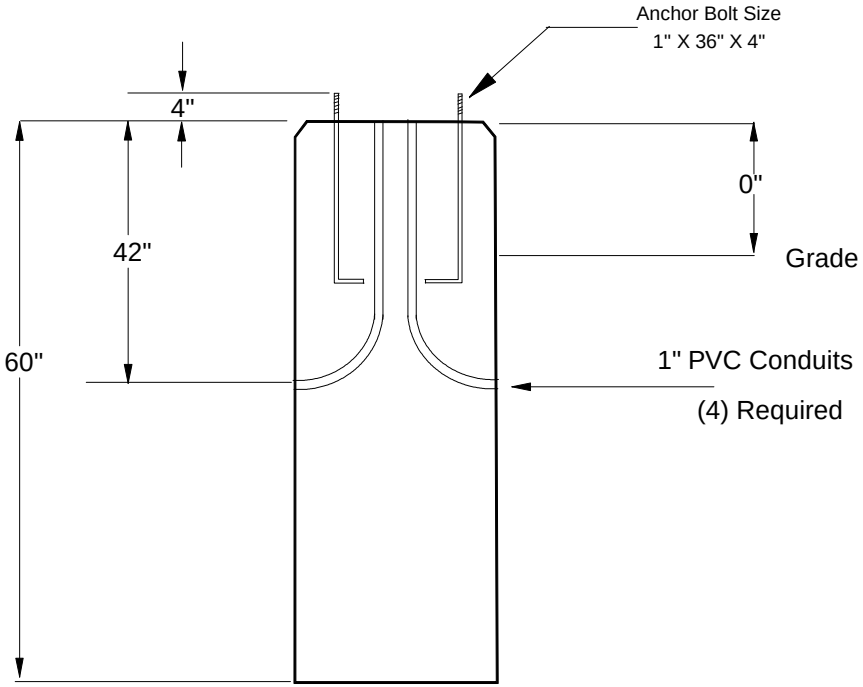

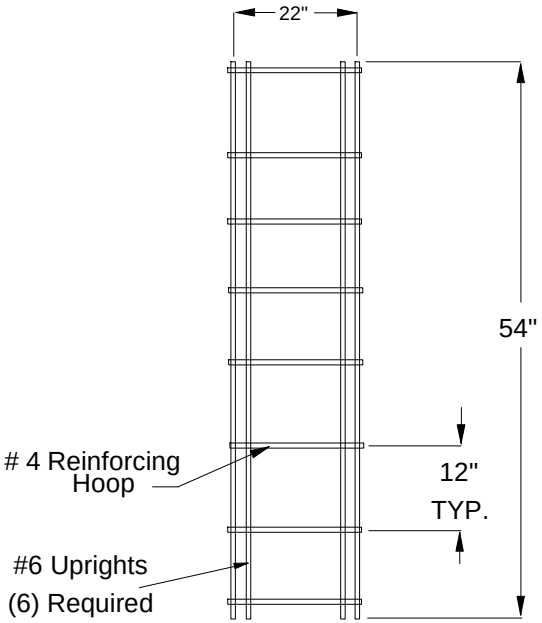

Iowa Base Inc.

Precast Light Pole Base

Date: 9-30-2011

Contractor:

Job: Menards Standard 60

Quantity:

Description 30" X 60"

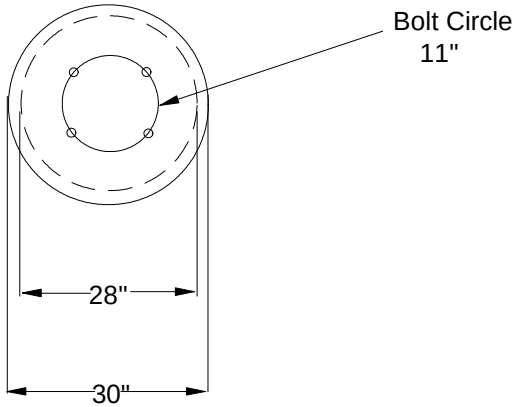

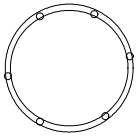

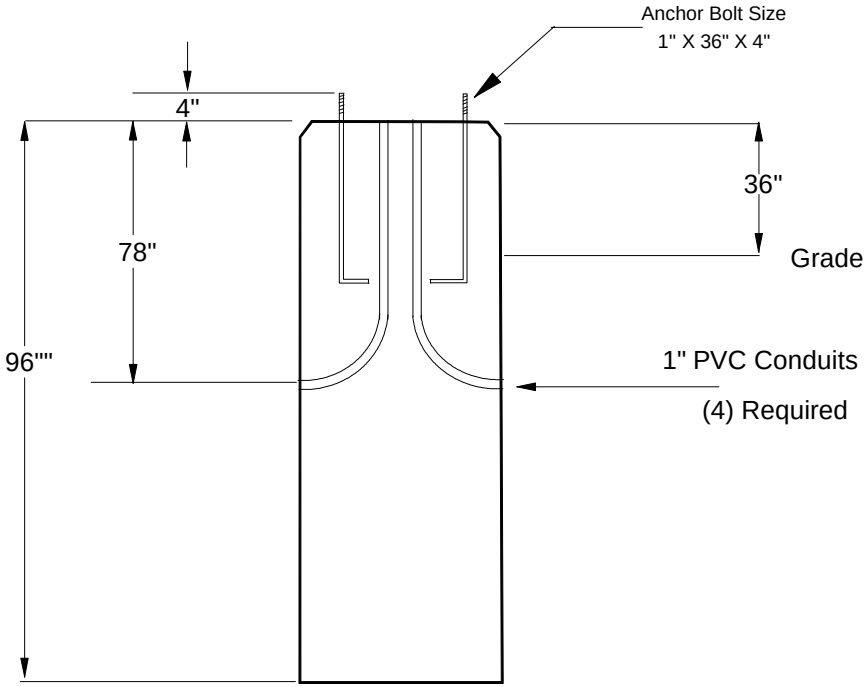

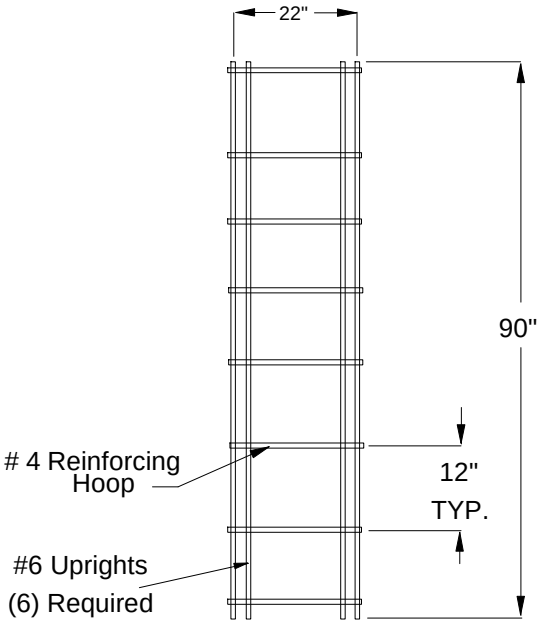

Iowa Base Inc.

Precast Light Pole Base

Date: 9-30-2011

Contractor:

Job: Menards Standard 96

Quantity:

Description 30" X 96"

GRIP STRUT® 5-DIAMOND PLANK (1-3/4" WIDTH) Plank LOAD TABLE

Material	Height in. (mm)	#/LF (Kg/m)	Catalog Number		Clear Span 2'-0"	2'-6"	3'-0"	3'-6"	4'-0"	4'-6"	5'-0"	5'-6"	6'-0"	6'-6"	7'-0"	7'-6"	8'-0"	9'-0"	10'-0"	11'-0"	12'-0"
STEEL 14 ga.	1-1/2 (38.1)	4.2 (6.25)	51514	U	535	344	240	177	136	108	88	74	62								
				D	.06	.10	.14	.20	.26	.33	.41	.50	.60								
				C	525	422	353	304	267	239	216	198	183								
				D	.05	.08	.12	.16	.21	.26	.33	.40	.48								
	2 (50.8)	4.4 (6.55)	52014	U	890	571	397	293	225	178	145	120	102	87	76	66	59	47			
				D	.06	.09	.13	.17	.23	.29	.36	.43	.52	.61	.71	.83	.95	1.21			
				C	707	699	584	502	440	393	355	324	299	277	259	243	230	207			
				D	.04	.07	.10	.14	.18	.23	.29	.35	.42	.49	.57	.66	.76	.97			
	2-1/2 (63.5)	4.7 (6.99)	52514	U	1021	655	456	336	258	204	166	138	116	100	86	76	67	54	44		
				D	.04	.06	.08	.11	.14	.18	.23	.28	.33	.39	.45	.52	.60	.77	.96		
				C	707	707	669	575	505	450	407	371	342	317	296	278	262	236	216		
				D	.02	.04	.06	.09	.12	.15	.18	.22	.26	.31	.36	.42	.48	.62	.77		
STEEL 12 ga.	1-1/2 (38.1)	5.9 (8.78)	51512	U	710	456	318	235	181	144	117	98	83	71	62	55	49				
				D	.07	.11	.15	.21	.28	.35	.44	.53	.64	.76	.89	1.03	1.18				
				C	695	558	467	402	354	317	287	263	244	227	213	201	190				
				D	.05	.08	.12	.17	.22	.28	.35	.43	.51	.60	.71	.82	.95				
	2 (50.8)	6.2 (9.23)	52012	U	1131	725	505	372	286	227	185	154	130	111	97	85	75	60	50	42	
				D	.05	.08	.11	.16	.20	.26	.32	.39	.47	.56	.65	.75	.86	1.11	1.39	1.70	
				C	1107	888	742	638	561	501	453	414	382	355	332	312	295	266	243	224	
				D	.04	.06	.09	.12	.16	.21	.26	.31	.38	.44	.52	.60	.69	.89	1.11	1.36	
	2-1/2 (63.5)	6.6 (9.82)	52512	U	1691	1083	753	554	425	337	273	226	151	141	123	109	87	71	59	59	50
				D	.04	.06	.09	.13	.17	.21	.26	.32	.38	.45	.52	.60	.68	.87	1.09	1.33	1.60
				C	1115	1115	1106	950	833	742	669	610	561	519	484	453	426	382	347	319	295
				D	.02	.04	.07	.10	.13	.17	.21	.25	.30	.36	.41	.48	.55	.70	.87	1.06	1.28
	3 (76.2)	7.0 (10.4)	53012	U	2138	1370	952	701	537	425	345	286	241	206	178	155	137	109	89	74	63
				D	.04	.06	.08	.11	.14	.18	.22	.27	.32	.38	.44	.51	.58	.74	.93	1.13	1.36
				C	1115	1115	1115	1115	1052	937	845	770	707	654	609	570	537	480	436	399	369
				D	.02	.03	.05	.08	.11	.15	.18	.22	.26	.31	.36	.41	.47	.60	.74	.90	1.09
ALUM. ALLOY 5052 12 ga. .080"	1-1/2* (38.1)	1.49 (2.22)	51512-A	U	403	255	179	132	100												
				D	.10	.15	.22	.31	.40												
				C	395	316	263	226	197												
				D	.08	.12	.18	.25	.32												
	2 (50.8)	1.59 (2.36)	52012-A	U	592	379	263	193	148	117	95	78									
				D	.08	.13	.18	.25	.33	.42	.52	.63									
				C	466	466	386	331	290	257	232	211									
				D	.05	.10	.15	.20	.27	.34	.42	.51									
	2-1/2* (63.5)	1.67 (2.48)	52512-A	U	889	569	395	290	222	176	142	118	99	84	73	63					
				D	.07	.10	.15	.21	.28	.35	.43	.53	.63	.74	.85	.98					
				C	466	466	466	466	435	387	348	316	290	268	249	232					
				D	.02	.05	.10	.16	.22	.28	.35	.42	.50	.59	.68	.78					
	3* (76.2)	1.75 (2.60)	53012-A	U	951	699	485	357	273	216	175	144	121	103	89	78	68				
				D	.05	.09	.14	.19	.25	.31	.39	.47	.56	.66	.77	.88	1.00				
				C	466	466	466	466	466	466	428	389	356	329	305	285	267				
				D	.02	.04	.07	.11	.17	.24	.31	.38	.45	.53	.61	.70	.80				
ALUM. ALLOY 5052 10 ga. .100"	1-1/2* (38.1)	1.86 (2.79)	51510-A	U	459	294	204	150	115	91											
				D	.09	.15	.22	.30	.39	.50											
				C	450	360	300	257	225	200											
				D	.07	.12	.17	.24	.31	.40											
	2* (50.8)	2.00 (2.98)	52010-A	U	829	530	368	271	207	164	133	110	92	78	68	59					
				D	.09	.14	.20	.28	.37	.46	.58	.70	.83	.98	1.13	1.30					
				C	714	649	541	464	406	361	325	295	270	250	232	216					
				D	.06	.11	.16	.22	.29	.37	.46	.56	.66	.78	.90	1.04					
	2-1/2* (63.5)	2.11 (3.14)	52510-A	U	1140	730	507	372	285	225	182	151	127	105	93	81	71				
				D	.07	.11	.16	.22	.28	.36	.45	.54	.64	.76	.88	1.01	1.15				
				C	714	714	714	638	558	496	446	406	372	343	319	298	279				
				D	.03	.07	.12	.17	.23	.29	.36	.43	.51	.60	.70	.81	.92				
	3* (76.2)	2.22 (3.30)	53010-A	U	1458	942	654	481	368	291	235	195	164	139	120	105	92				
				D	.05	.08	.12	.17	.22	.28	.34	.42	.50	.59	.68	.78	.89				
				C	714	714	714	714	714	640	576	524	480	443	412	384	360				
				D	.02	.04	.07	.12	.17	.22	.27	.33	.40	.47	.54	.62	.71				
STAINLESS STEEL 304 16 ga.	2 (50.8)	3.7 (5.51)	52016-S	U	583	374	261	192	148	118	96	80	68	58	48						
				D	.05	.08	.11	.16	.20	.26	.32	.39	.47	.56	.61						
				C	464	458	323	330	290	259	235	215	199	185	165						
				D	.03	.06	.09	.12	.16	.21	.26	.32	.38	.45	.49						
STAINLESS STEEL 316 16 ga.		3.7* (5.51)	52016-SL	U	406	324	225	165	126	100	81	66	56	47							
				D	.04	.06	.10	.13	.17	.22	.27	.32	.39	.45							
				C	398	397	330	283	248	220	198	180	165	152							
				D	.03	.05	.08	.10	.14	.17	.22	.26	.31	.36							

Load Table Symbols:
U-uniform load (lbs/LF)
C-concentrated load (lb.)
D-deflection (inches)

Chart Notes:
1) Spans in colored area produce deflection of 1/4" or less under uniform load of 100 lbs/ft.
2) *Indicates items available by special order.
3) For "Engineering Data" and "Strut Loading" please see page 12.

NEXUS CORPORATION
CREATORS OF ENCLOSED ENVIRONMENTS

MENARD

GARDEN CENTER GLAZED CANOPY

CONSTRUCTION BOOKLET

10983 Leroy Drive, Northglenn, CO 80233 303-457-9199 (1-800-228-9639)

NOTE TO BUILDER

Enclosed is the parts list, shop drawings and construction booklet for your structure.

Before you begin construction, inventory all the parts that have arrived at the site. Call Nexus if there are any parts missing. This will help to avoid delays during construction.

Also, check for any damage to parts. If anything arrives damaged, **NOTE IT ON THE BILL OF LADING** and let us know so that we can replace it as soon as possible.

The construction booklet gives detailed instructions for each step in the building process. By using the booklet and referring to the parts list and shop drawings, the erection of the greenhouse will go smoothly, quickly, and per design specifications.

NOTE: Take care when breaking apart bundles containing different parts.

CONTENTS

BRACKET IDENTIFICATION	4 & 5
FRAMING HARDWARE LOCATION	6
LAYING OUT THE GREENHOUSE	7
CHECK OUT THE BEAMS	7
DETERMINE A STARTING POINT	7
SETTING COLUMNS	8
INSTALLING TRUSSES AND PURLINS	9-11
ATTACH COLUMN CAP AND GUTTER SADDLES	12
ATTACH THE TRUSSES AND PURLINS	12
INSTALLING DOUBLE RIDGE PURLINS (FOR METAL/RESOLITE ROOF)	13
INSTALLING ROOF SWAY RODS	14
INSTALLING GUTTERS	16
ATTACHING KNEE BRACES	18
PLUMBING THE STRUCTURE	19
ATTACHING POSTS AND WALL MEMBERS	20
INSTALLING GABLE WIND BRACING	21

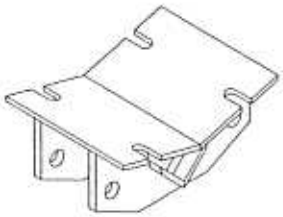

GUTTER SADDLE

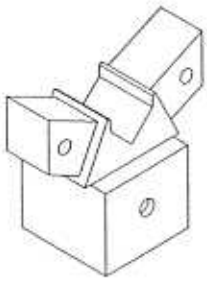

4" COLUMN CAP

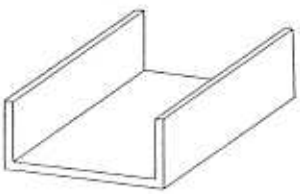

MC 6X12
STEEL CHANNEL

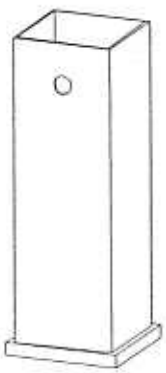

4"SQ. COLUMN STUB
W/ 4-1/2" SQ. PLATE
WELDED TO BOTTOM

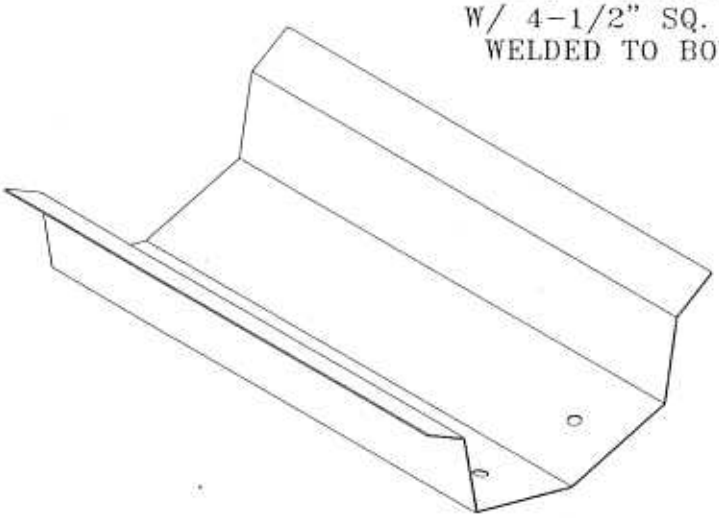

GUTTER

PART IDENTIFICATION

PART IDENTIFICATION

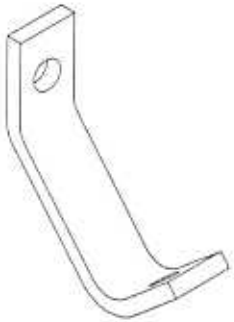

DOUBLE BENT SWAY ROD BRACKET
(SB-2)

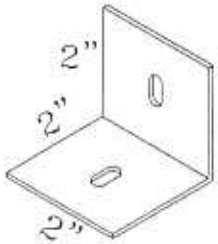

L-1
(2) HOLE ATTACHMENT LUG

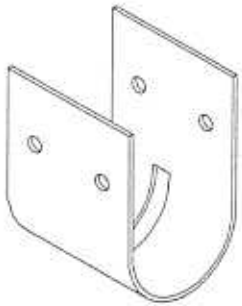

B-20 BRACKET
FOR WIND BRACING

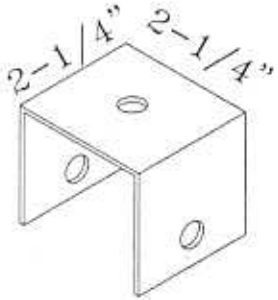

C-23
CLIP
WIND BRACING

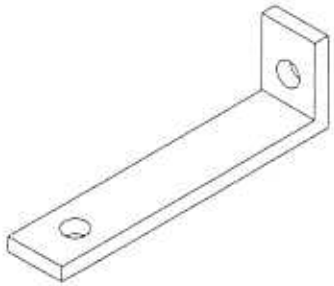

SINGLE BENT SWAY ROD BRACKET
(SB-1)

	COLUMN CAP TO COLUMN ATTACHMENT	TRUSS TO COLUMN ATTACHMENT	PURLIN TO TRUSS ATTACHMENT	SWAY ROD ATTACHMENT	GUTTER INSTALLATION	KNEE BRACE ATTACHMENT	GABLE POST ATTACHMENT	WALL MEMBER ATTACHMENT	WIND BRACING ATTACHMENT
BOLT, HEX. HD. 1/4" X 3/4"					X				
BOLT, CARR, 3/8" X 3/4"									X
BOLT, HEX. HD. 3/8" X 1"					X				
BOLT, HEX. HD. 3/8" X 2-3/4"						X			X
BOLT, CARR. 3/8" X 2-3/4"									
BOLT, CARR. 3/8" X 5"			X	X		X	X		
BOLT, CARR. 3/8" X 6"			X	X					
BOLT, CARR. 3/8" X 7"			X	X			X		
BOLT, HEX. HD. 1/2" X 3-1/2"		X							
BOLT, HEX. HD. 1/2" X 5-1/2"	X			X					
WASHER, NEOPRENE 1/4"						X			
WASHER, NEOPRENE 3/8"						X			
WASHER, FLAT 3/8"						X			
SCREW, SD. #14 X 1"							X	X	X
WASHER, FLAT 1/2"									X

FRAME
HARDWARE
LOCATION

LAYING OUT THE GREENHOUSE

Check the Beams

Verify that the beams are level and match the spacings listed in the shop drawings. The column heights listed in the column layout are total column length. If the beams are not level, such as the beam near the metal canopy, the column stubs will need field cut to match the slope.

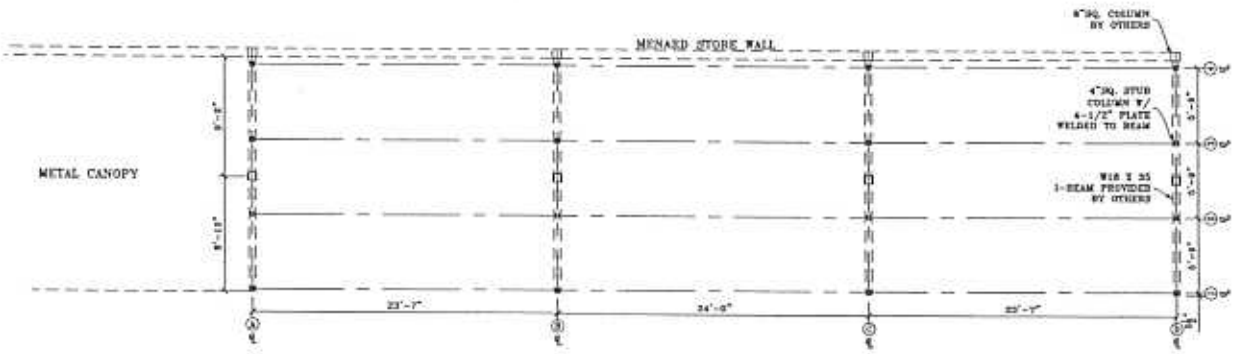

Determine a Starting Point

Determine a starting point for the canopy. All measurements should be from the front of the canopy at the outside ends of the beams. Because the beams are already installed, the canopies may need to be moved slightly to fit the beam spacings. If a metal canopy is adjacent to the Nexus canopy and the joists from the metal canopy share a beam with the column stubs from the Nexus canopy, then the supplied 'C' channels will need to be installed first. The 'C' channels will be installed with the legs down and perpendicular to the length of the beam. The purpose of the 'C' channel is to span over the top chords of the metal canopy joist and provide a flat bearing surface for welding the column stubs.

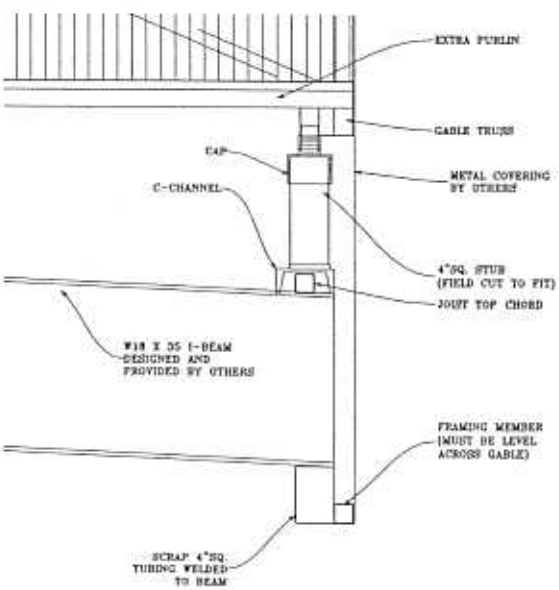

At all other locations, the column stubs will be welded directly to the top of the beam.

SETTING COLUMNS

Lay Out Columns

Lay out all columns according to the column layout on sheet 1 of the plans. All of the column stubs have the same height so they can be used at any location.

NOTE: Start the column stub placement at the front of the beam. Space the outermost column stubs 2-1/2" from the center of the stub to the end of the beam. Then follow the spacing shown on the column layout. Any extra space will be taken up at the back of the canopy at the vertical wall.

Attach Columns to the Beam

Weld the columns to the beam according to the column stub orientation details on sheet 2 of the shop drawings. The holes at the top of the columns should face down the column line.

NOTE: Do not weld the stubs until columns are plumb.

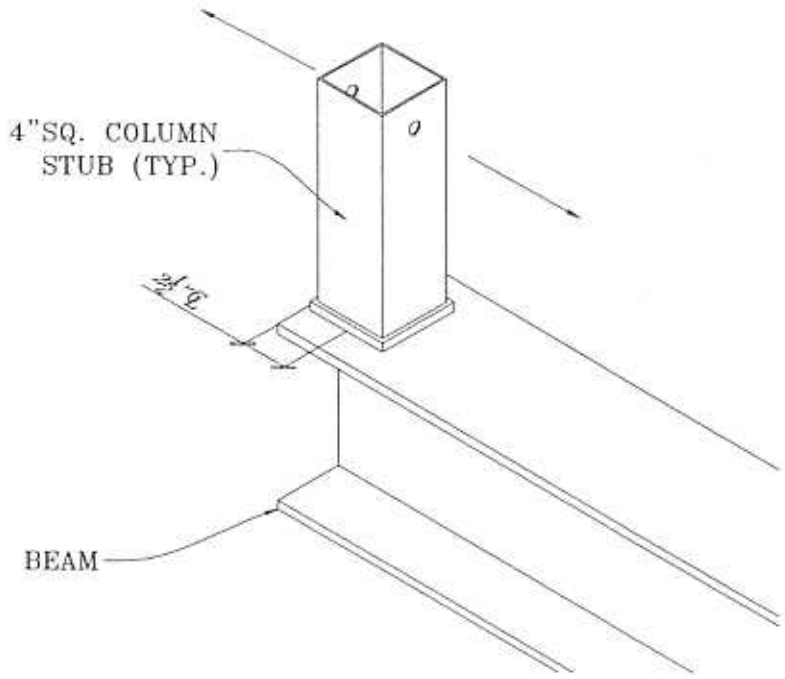

BEAM/COLUMN LINE

INSTALLING TRUSSES AND PURLINS

Lay Out the Trusses

Lay out trusses for easy access near their intended locations. Gable trusses are at the front of the canopies. All of the other trusses are line trusses and do not have welded offsets.

NOTE: Lay out the trusses, including gable trusses, so that the painted ends are facing in the same direction.

Attach Column Caps and Gutter Saddles

Attach column caps and gutter saddles to trusses following the guidelines below:

On trusses for middle house: Attach column caps and gutter saddles to both ends of truss.

On additional houses: Attach caps (no saddle) to the side away from middle house.

For truss to column cap attachments use ½" x 3-1/2" hex head bolts.

For column cap to column attachment use ½" x 5-1/2" hex head bolts.

See detail on next page.

NOTE: Hand tighten the bolts plus a quarter turn with a wrench **(DO NOT USE AN IMPACT WRENCH)**. The cap and saddle are cast pieces that do not flex. Over tightening may cause damage. The connection does not require more than a snug fit.

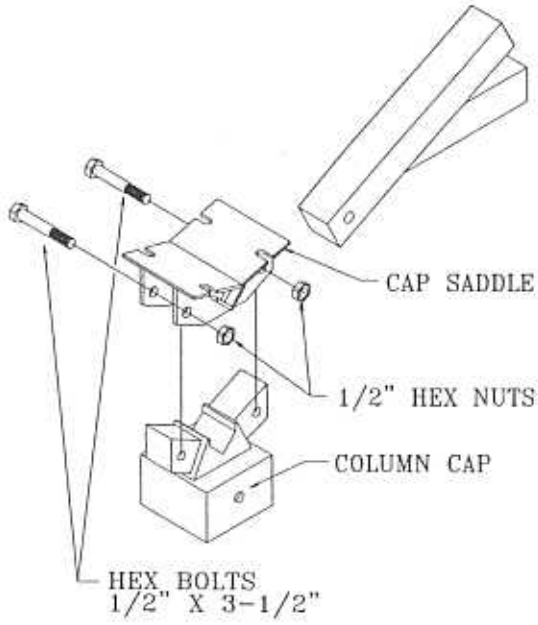

TYPICAL LINE TRUSS
ATTACHMENT AT MIDDLE CANOPY

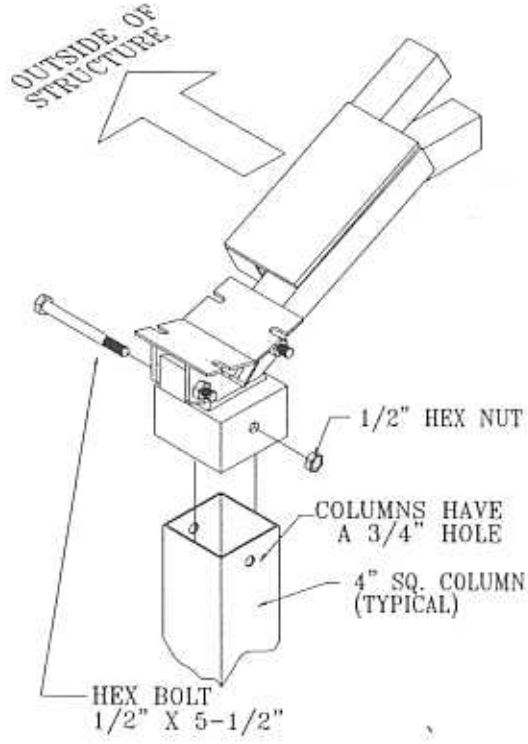

TYPICAL GABLE TRUSS
ATTACHMENT AT MIDDLE CANOPY

NOTE: Trusses not in middle canopy will only have column cap but no gutter saddle.

Attach the Trusses and Purlins

As you install the trusses, attach a few purlins for stability following the guidelines below:

NOTE: Be sure you are installing the purlin in its correct location. The purlins have one end painted red. The red painted end will go in the back of the canopy near the vertical store wall. The purlins are predrilled and the holes should line up with the holes in the trusses with minimal adjustment.

Use 3/8" carriage bolts for the above attachments. 6" bolts are used at sway rod locations and 5" bolts are used every where else. Do not completely tighten the bolts at this time.

Install the remaining purlins and the roof sway rod brackets at correct locations. Locations for sway rods are shown on sheet 1 of the shop drawings.

The purlins that are at the outside column lines near the column cap will need to be installed using the 2 hole 2" x2" lugs and #14 x 1" self drilled screws.

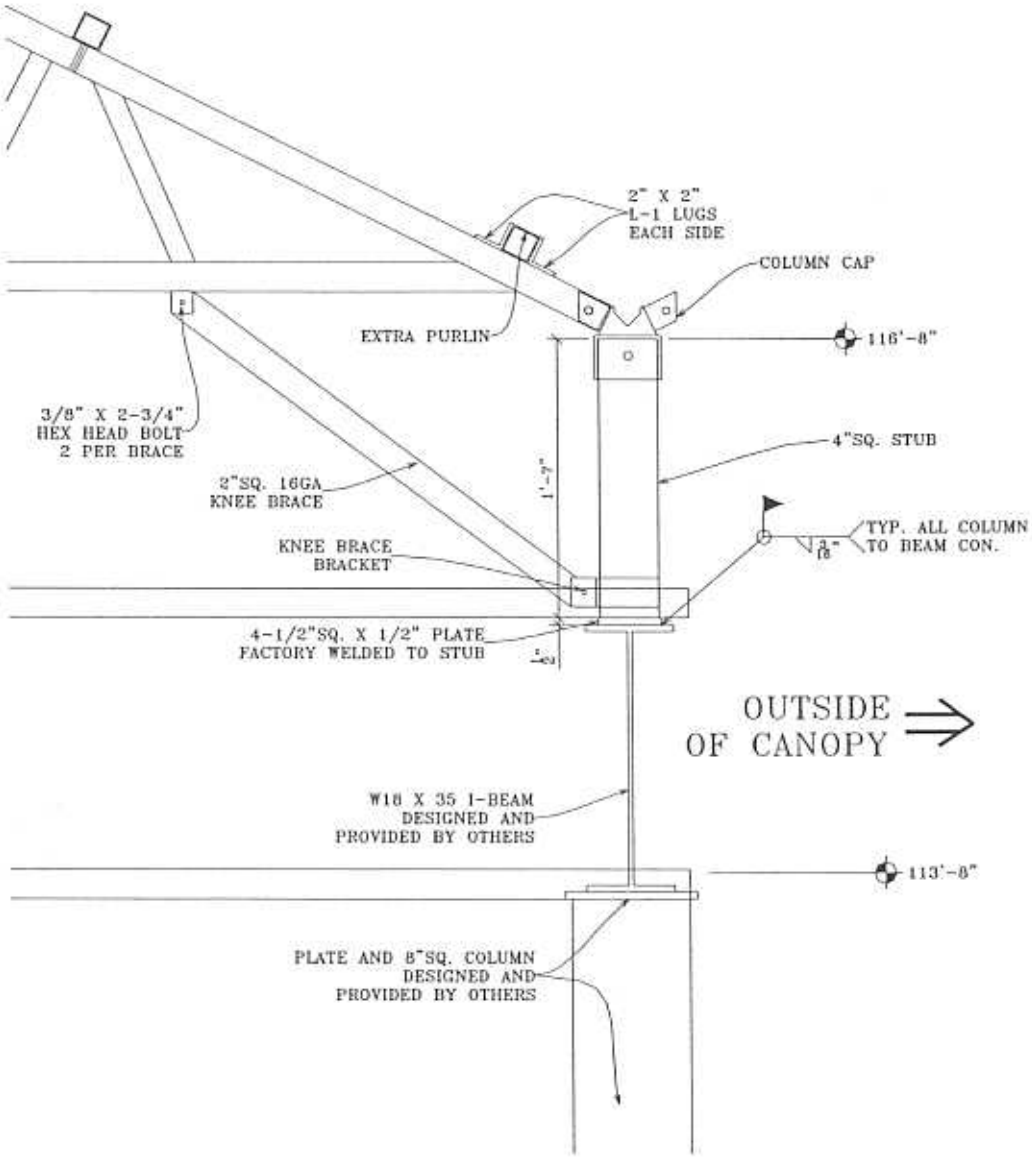

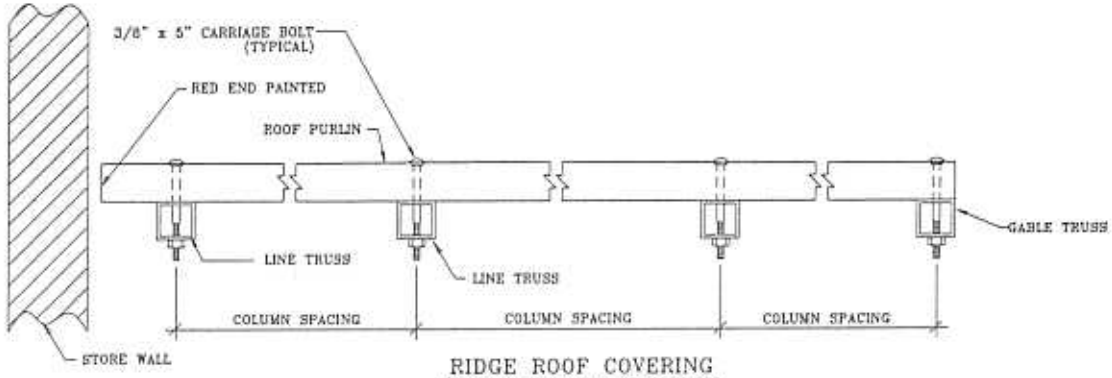

RIDGE ROOF COVERING
(PURLINS ABOVE TOP TRUSS CHORD)
SIDE VIEW

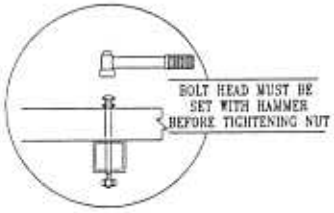

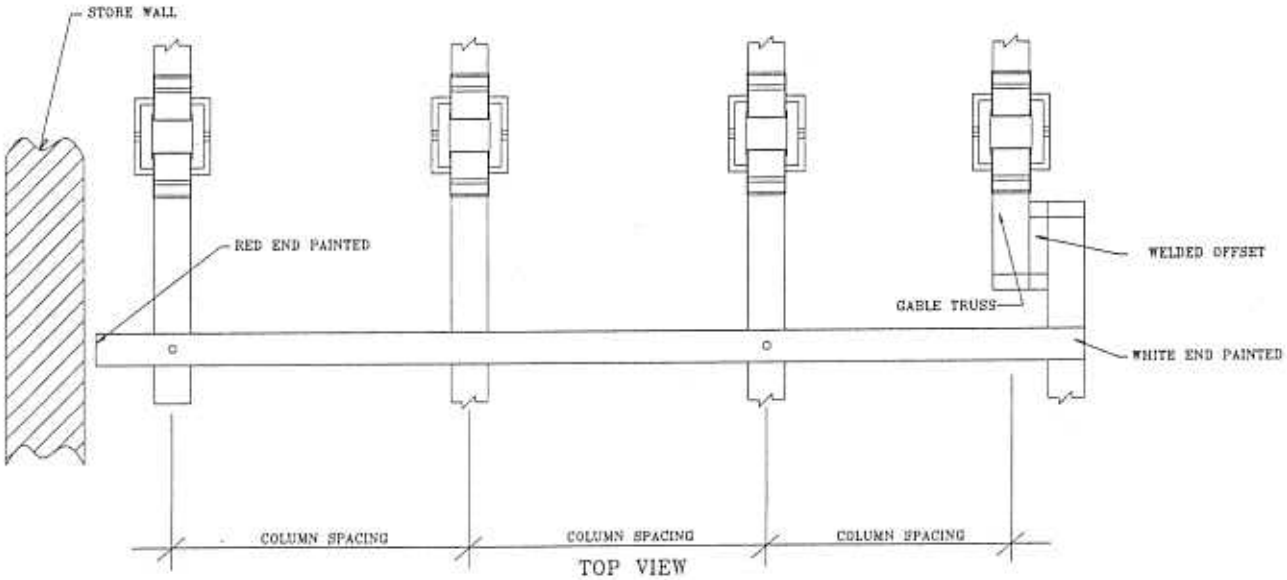

TOP VIEW

For corrugated material (metal or fiberglass) to be installed on the roof, two ridge purlins must be installed. Clips will be factory welded to the top chord of the truss. The ridge purlins are secured to the clips using 3/8" x 5" carriage bolts.

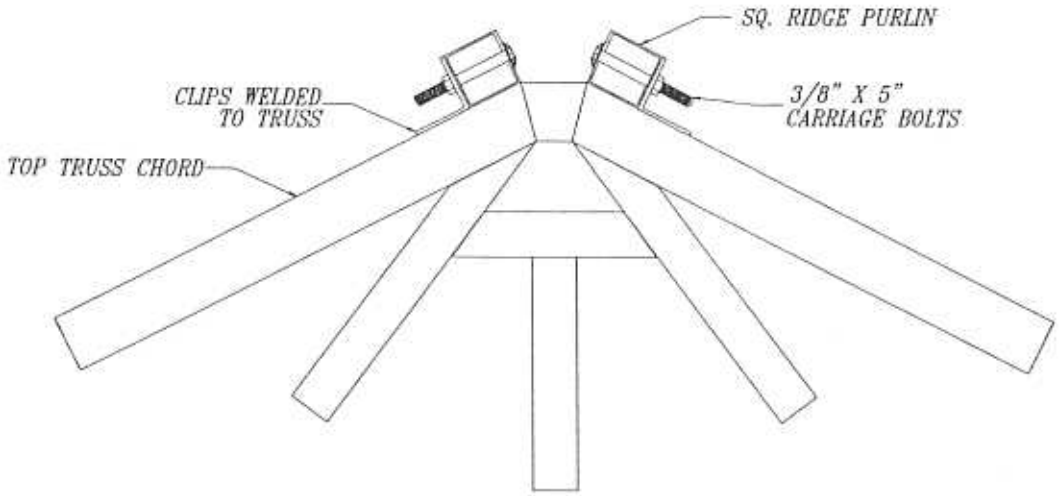

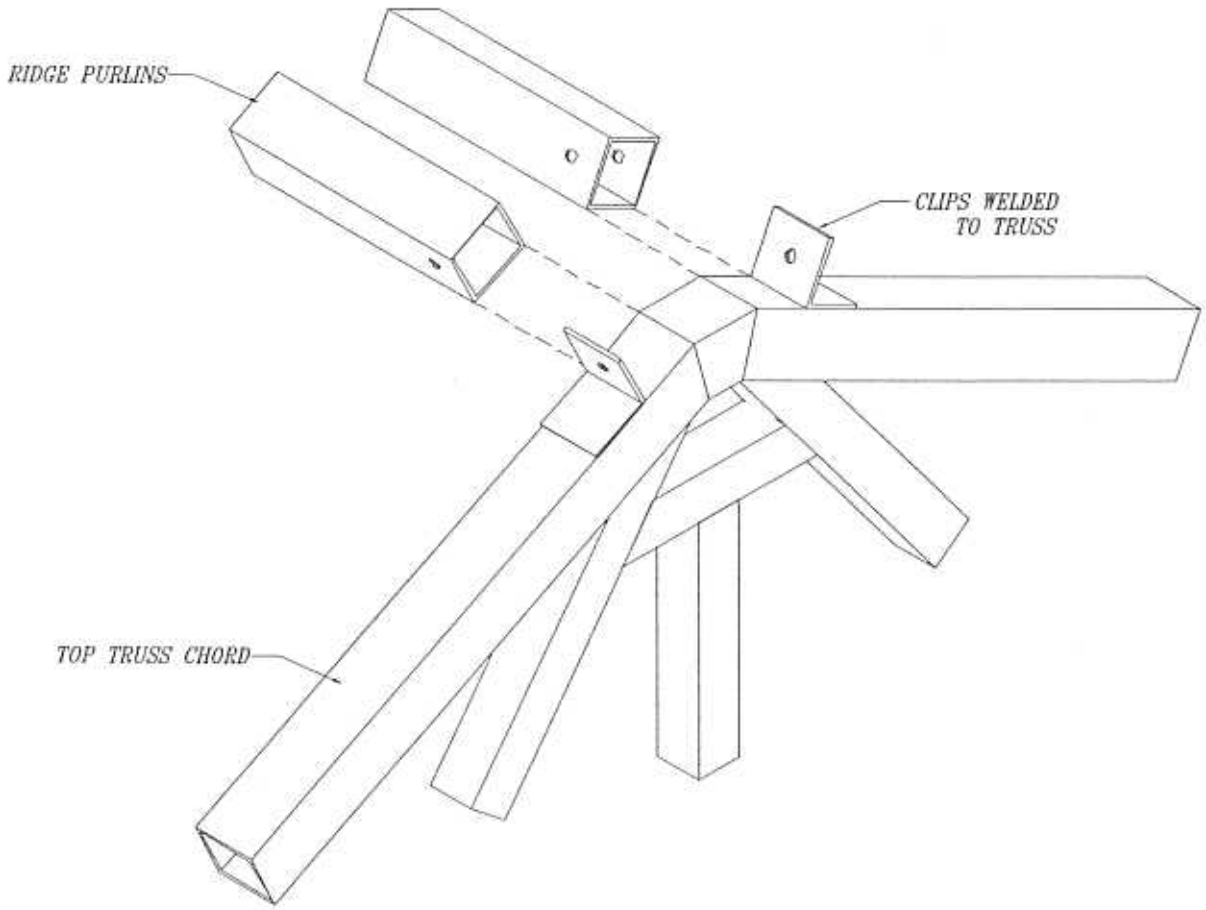

INSTALLING ROOF SWAY RODS

Install sway rods to brackets. **DO NOT TIGHTEN UNTIL STRUCTURE IS PLUMB.**

NOTE:

1) CHECK SHOP DRAWINGS FOR SWAY ROD LOCATIONS.
2) INSTALL RODS LOOSE INITALLY.
3) THE HOUSE SHOULD BE PLUMB AND TIED OFF BEFORE TIGHTENING SWAY RODS.
4) IT IS BEST TO WORK IN CREWS OF 2 TIGHTENING THE SAME ROD PAIRS ON OPPOSING SIDES OF THE ROOF.
5) NUMBER OF ROOF PURLINS MAY VARY FROM HOUSE TO HOUSE AND BAY TO BAY.

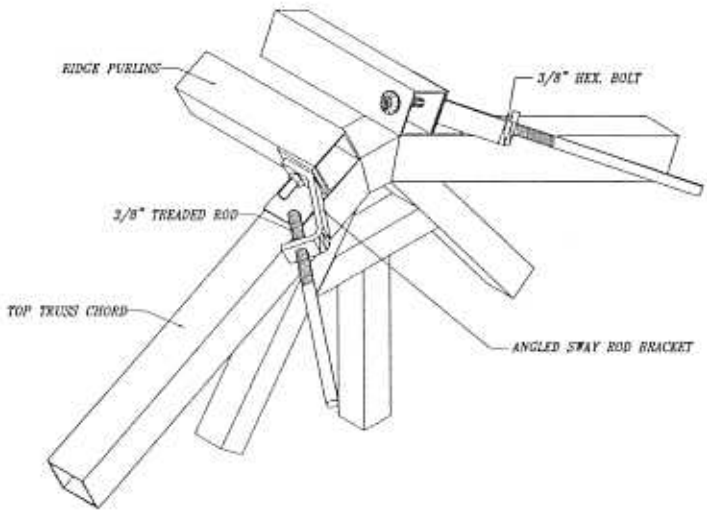

ROOF SWAY ROD ATTACHMENT AT PEAK

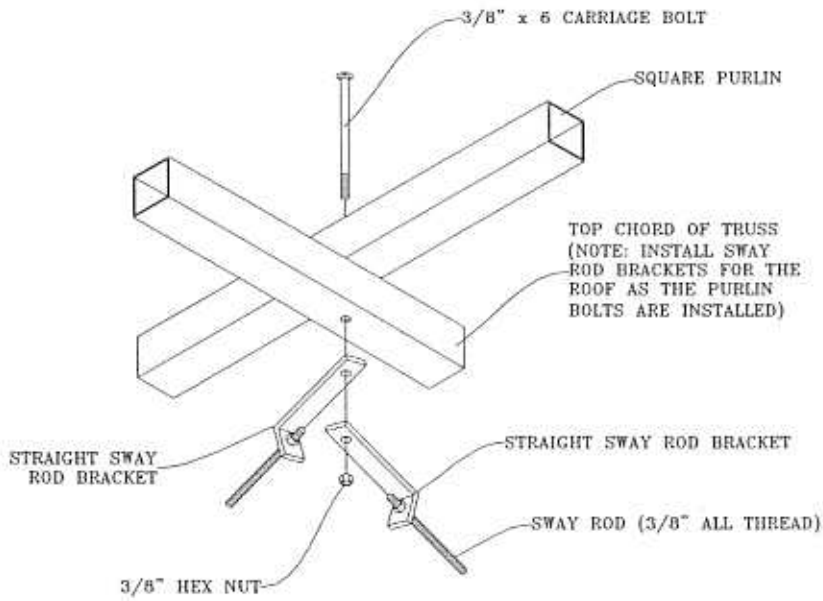

ROOF SWAY ROD INSTALLATION AT PURLIN

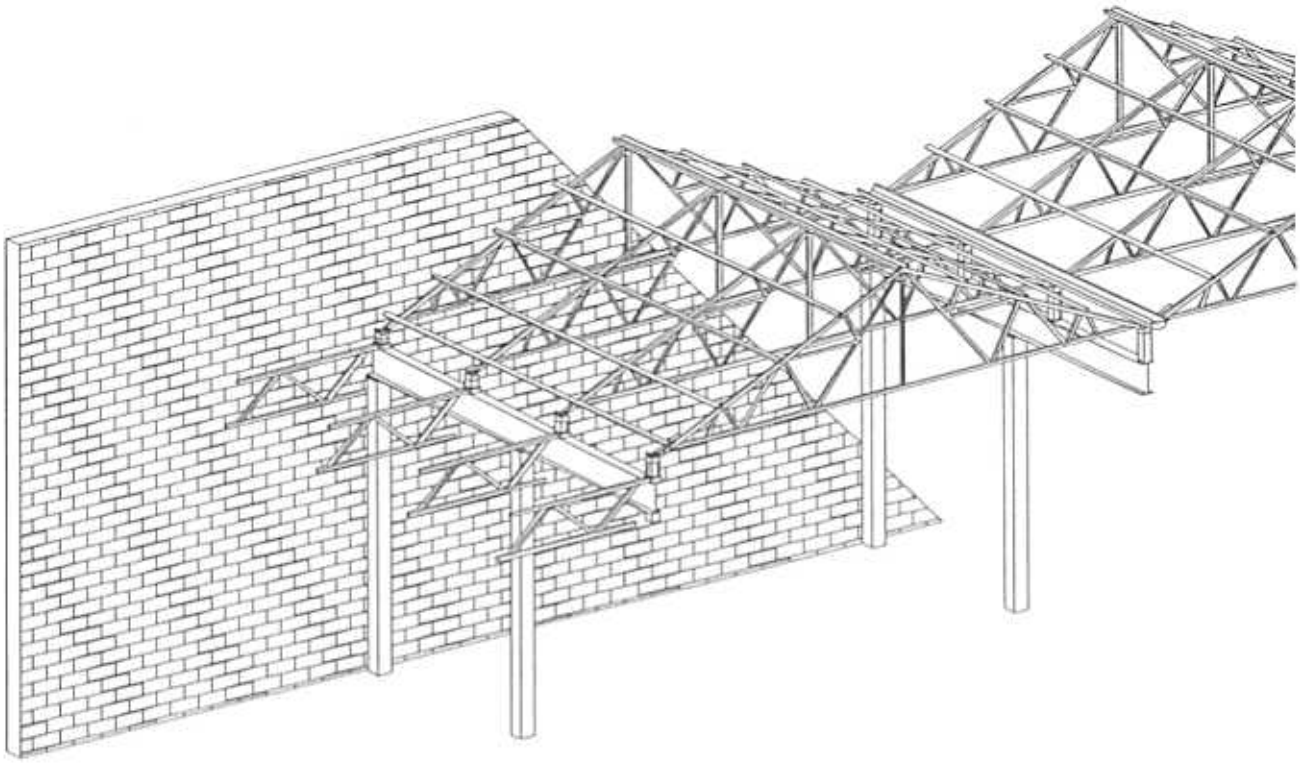

ASSEMBLY COMPLETION

- Column stubs installed
- Trusses installed
- All Purlins installed
- Roof sway rods installed

INSTALLING GUTTERS

Install gutters as shown in details below at the inside gutter lines. Be sure to include the 3/8" washer and nut (seated underneath the gutter saddle in the detail). Install the gutter at the outside gable end first and work to the back near the store wall.

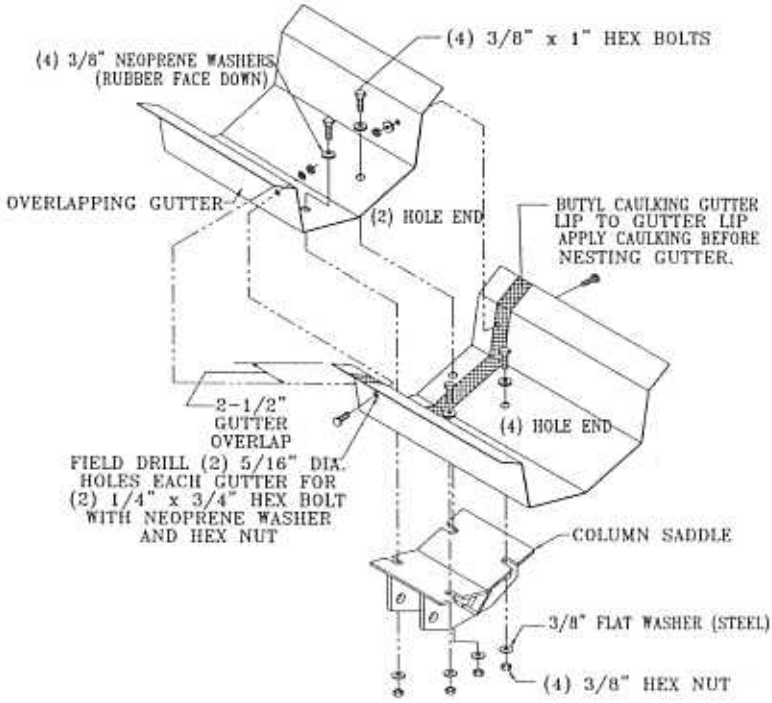

GUTTER OVERLAP DETAIL

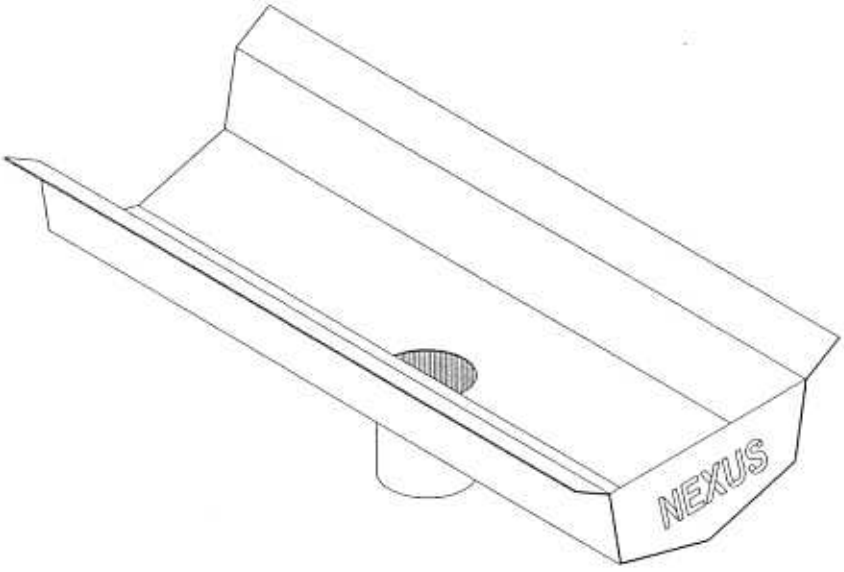

ENDCAP W/ DOWNSPOUT INSTALLATION

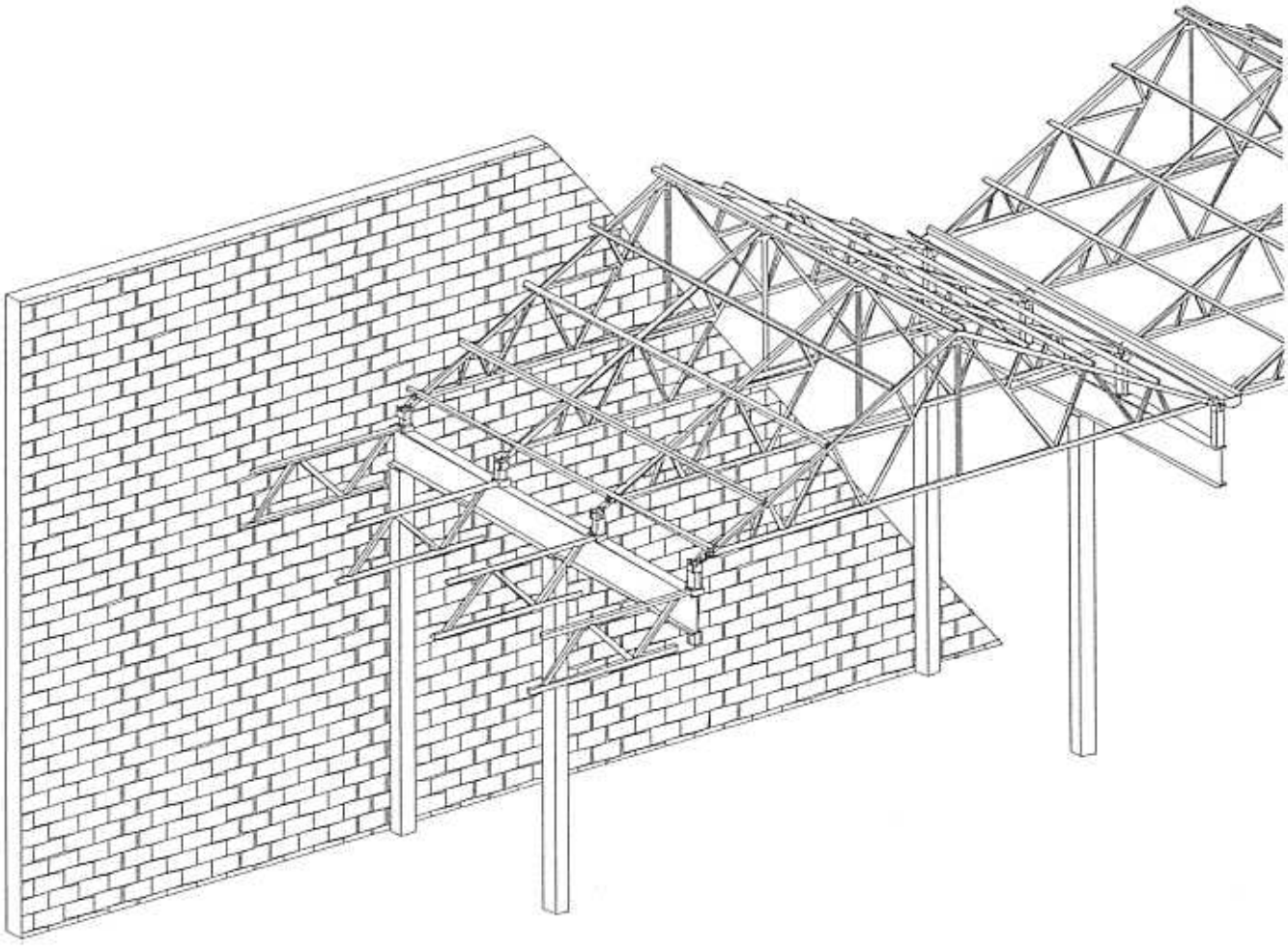

ASSEMBLY COMPLETION

- Columns installed
- Trusses installed
- All Purlins installed
- Roof sway rods installed
- Gutters installed

ATTACHING KNEE BRACES

Attach knee braces to trusses. Clips are factory welded to line trusses to accept the braces. Gable trusses do not have clips because the braces will fit flush against the inside of the gable truss bottom chord. Use 3/8" x 2 ¾" hex bolts at the line trusses and 3/8" x 5" carriage bolts at gable trusses. If multiple houses are being installed, use B-14 (twin leg) knee brace brackets at shared column lines. Use B-14b (one leg) brackets at the outside column lines. Attach the brackets to the knee braces using 3/8" x 2 ¾" hex bolts. Next, attach the brackets to the columns using #14 x 1" self drill screws. Knee braces will not be required at column stubs at the adjacent metal canopy.

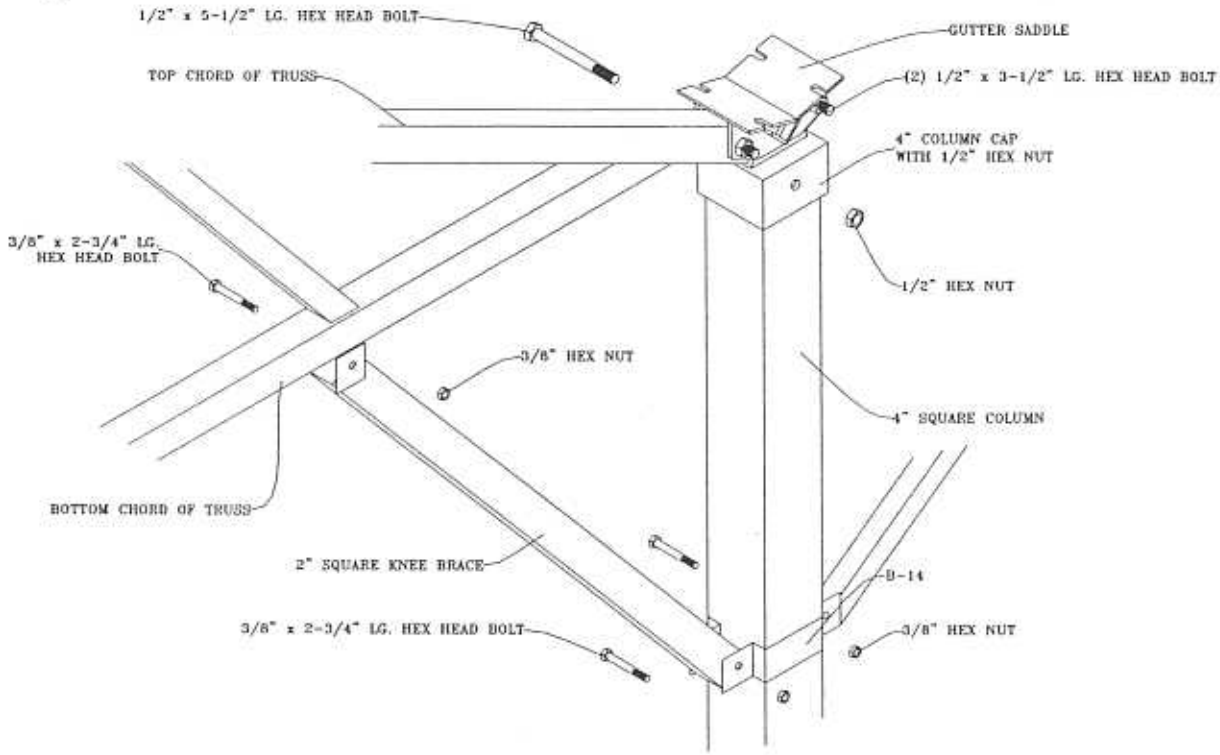

LINE TRUSS KNEE BRACE INSTALLATION (INTERIOR COLUMN)

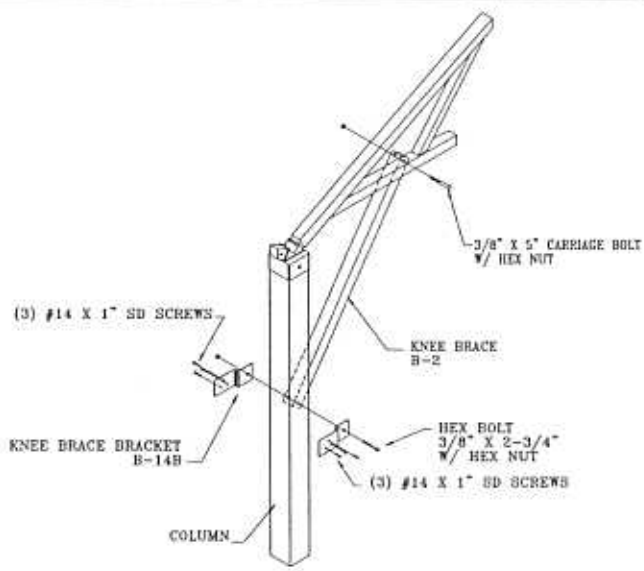

GABLE TRUSS KNEE BRACE INSTALLATION (EXTERIOR COLUMN)

PLUMBING THE STRUCTURE

Plumb the structure and tighten the purlin bolts and sway rods.

Tighten roof sway rods in the order shown below to maintain building square ness.

Recheck for plumb.

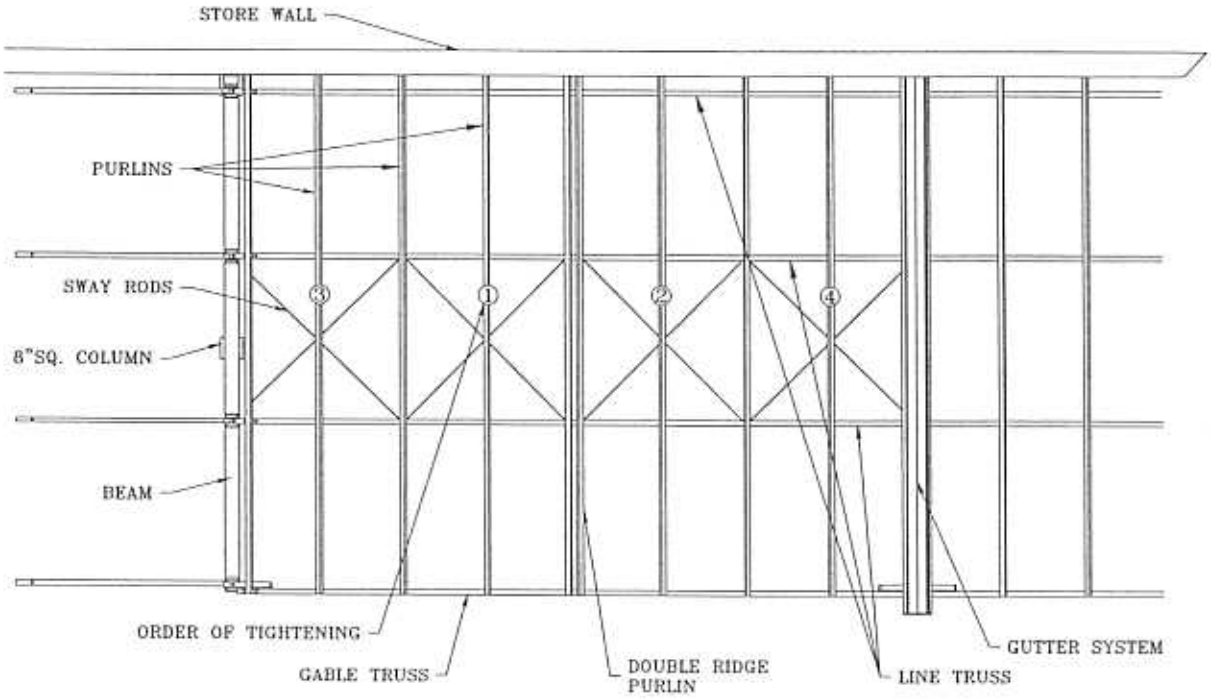

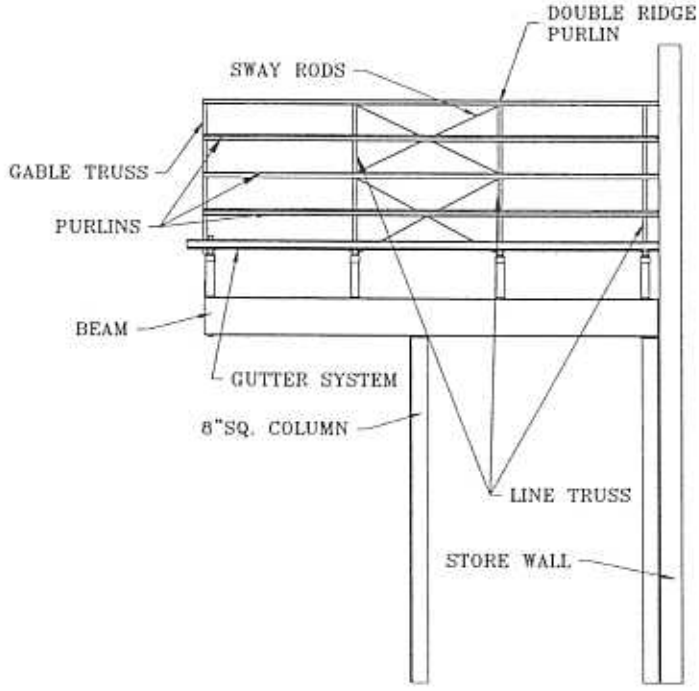

ATTACHING GABLE POSTS AND WALL MEMBERS

See shop drawings for location of gable posts and wall members.

NOTE: Gable posts and wall members vary in length. See the parts list on each piece to be sure you are installing the correct length at the correct location.

Attach gable posts and wall members as shown in details below

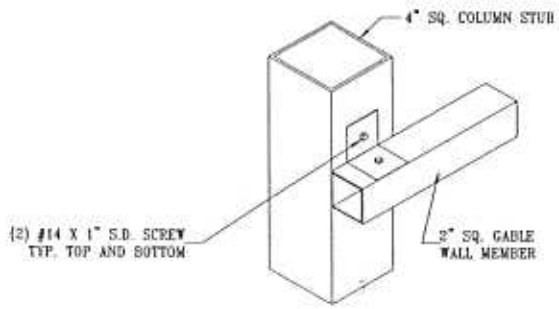

WALL MEMBERS TO CORNER

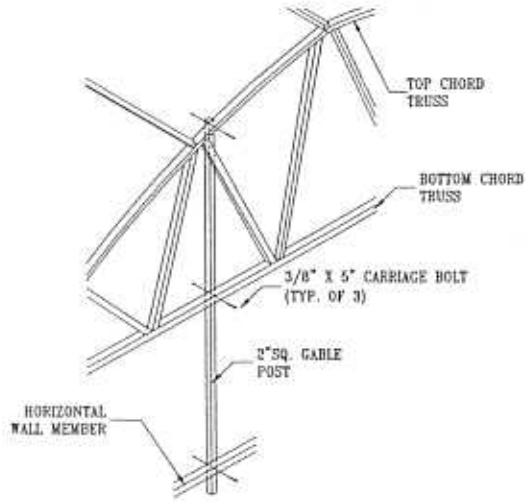

GABLE POST

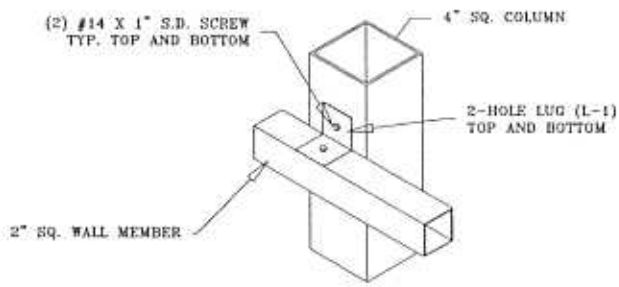

WALL MEMBER TO COLUMN

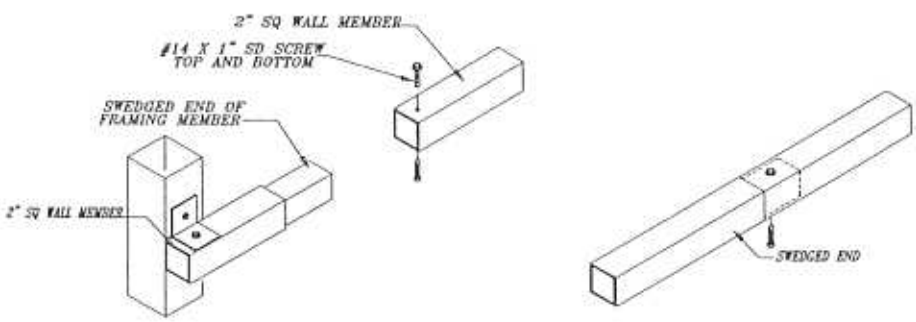

WALL MEMBER CONNECTION

Horizontal framing is located as shown on the shop drawings. Sign framing is also installed on the middle canopy and is located as shown on shop drawings.

INSTALLING GABLE WIND BRACING

Install gable wind bracing in all houses per details below. Check the shop drawings for locations of wind bracing. The wind bracing should go from gable post to purlin at a sway rod location.

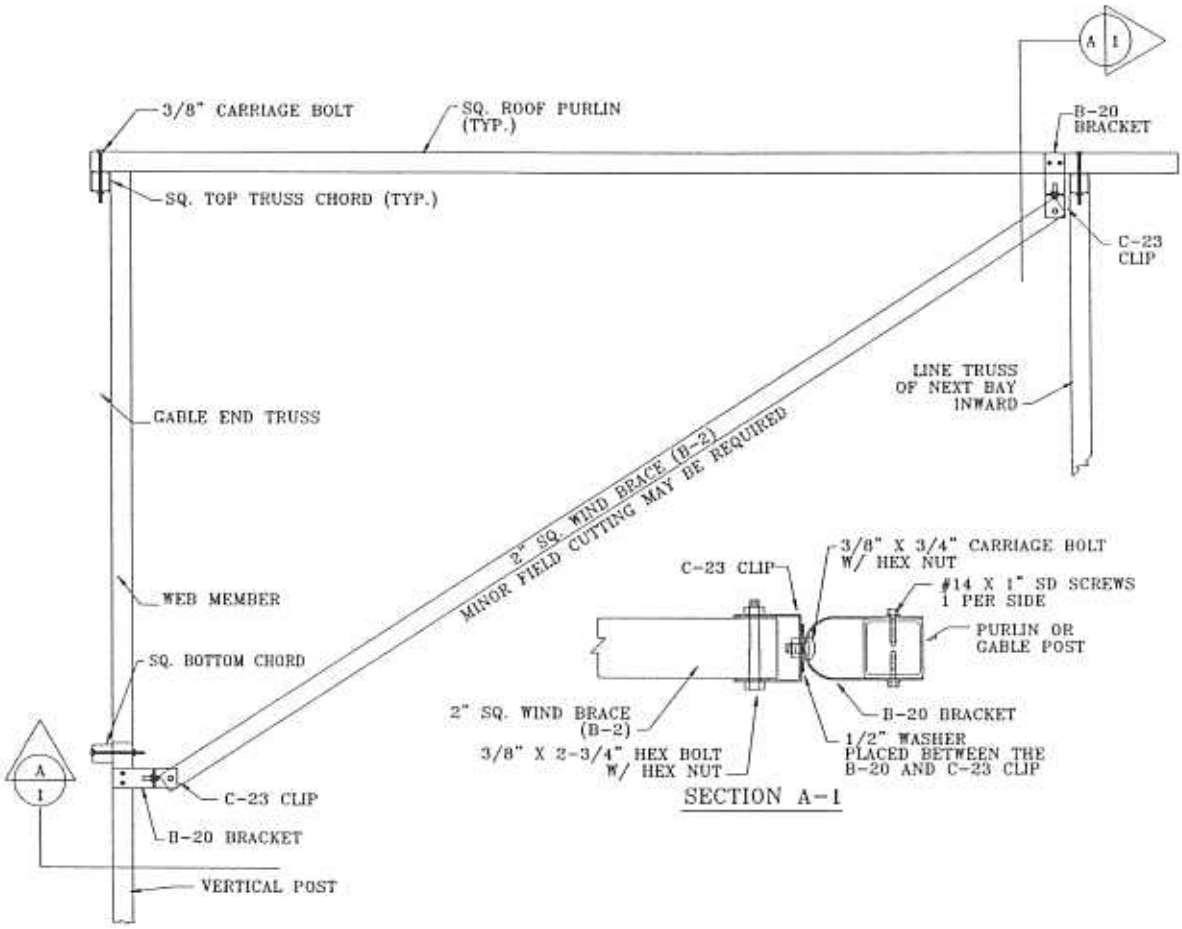

WIND BRACING DETAIL

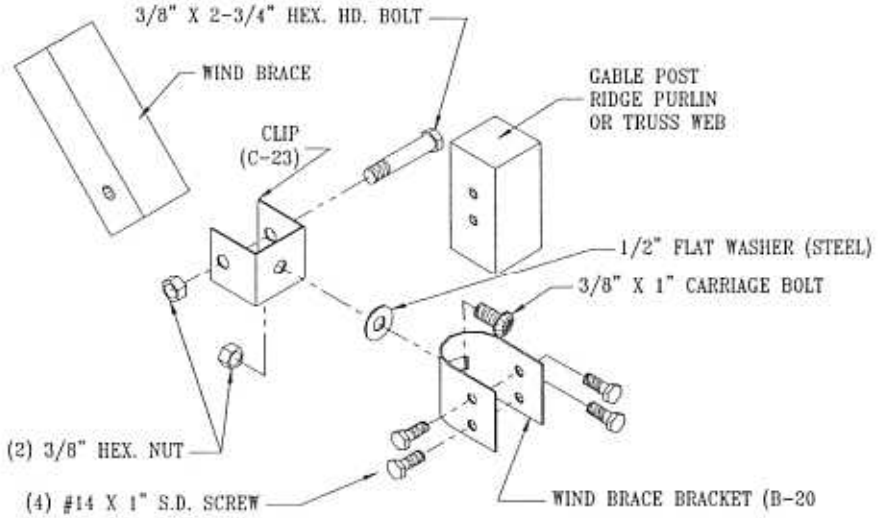

WIND BRACE CONNECTION DETAIL

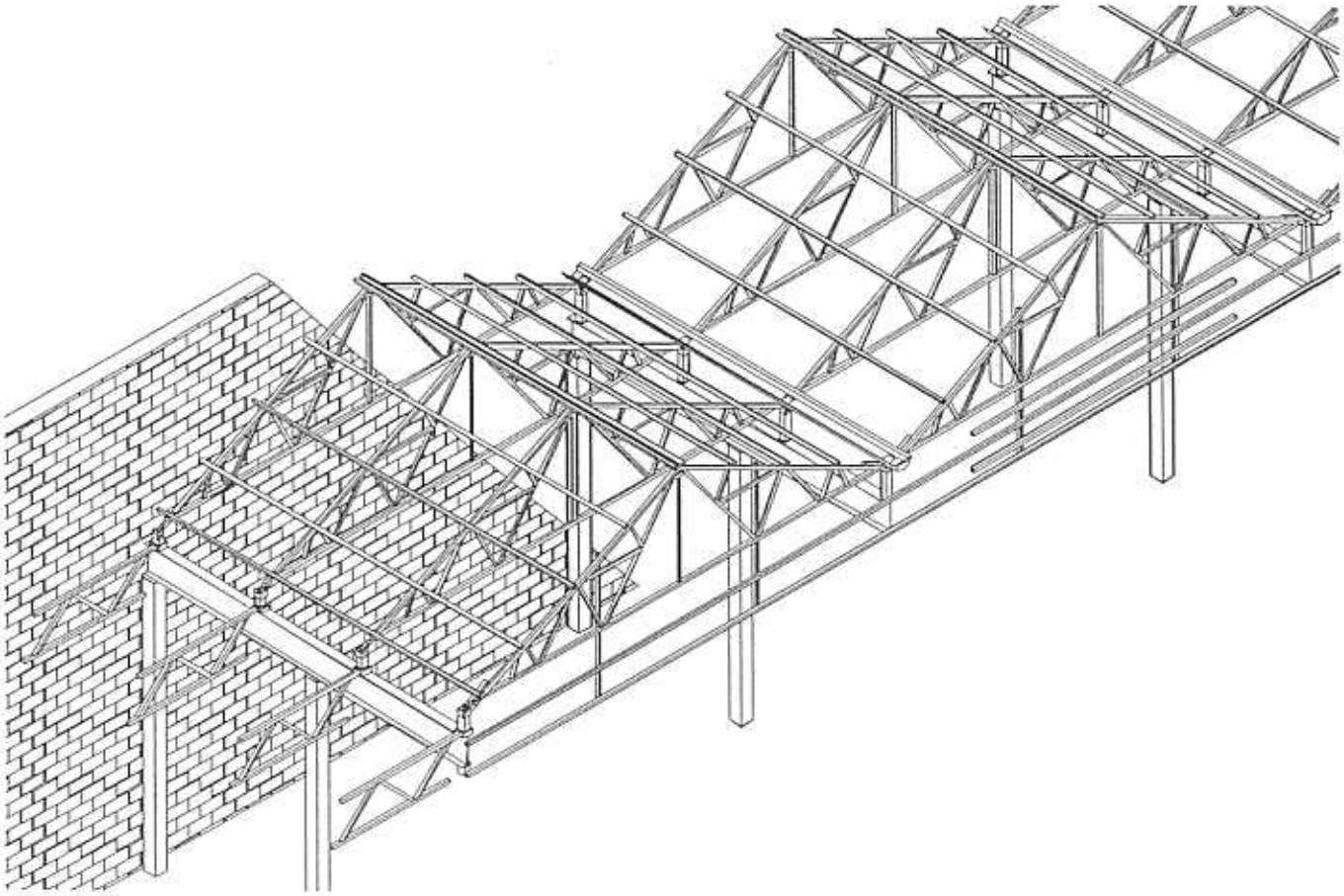

ASSEMBLY COMPLETION

- Columns installed
- Trusses installed
- All Purlins installed
- Roof sway rods installed
- Gutters installed
- Knee braces installed
- Structure plumbed
- Post installed
- Wall Members installed
- Wind Bracing installed

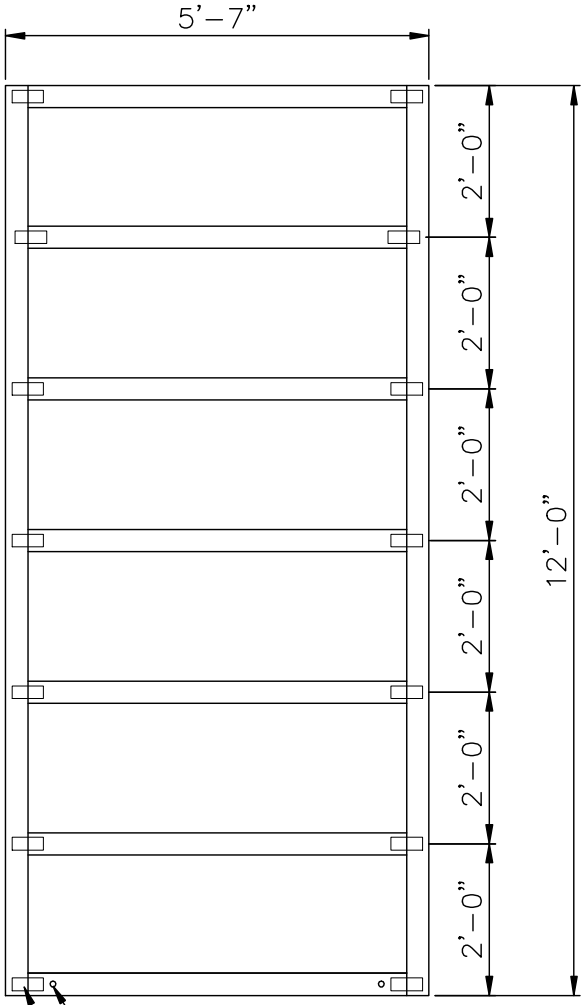

ANCHOR FRAME AT (2) LOCATIONS (FIRST 2x4 OF EACH FRAME ONLY) REF. DETAIL H

TYP. TRUSS PLATE

F PLAN – 12' FLOOR FRAME

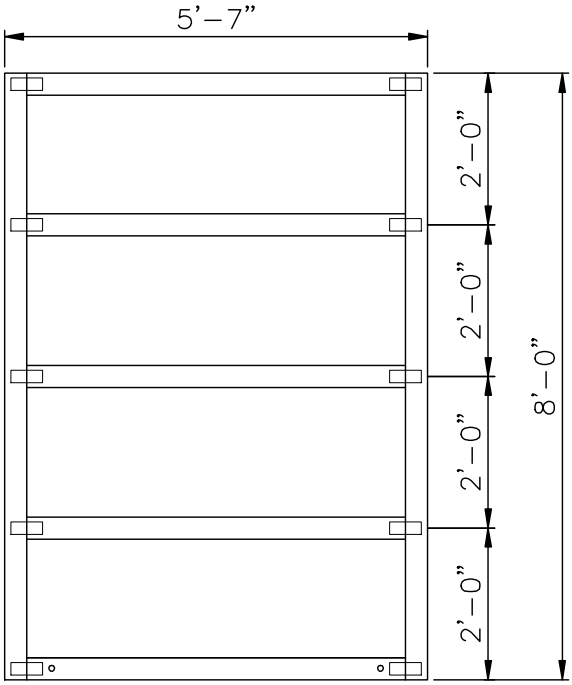

E PLAN – 8' FLOOR FRAME

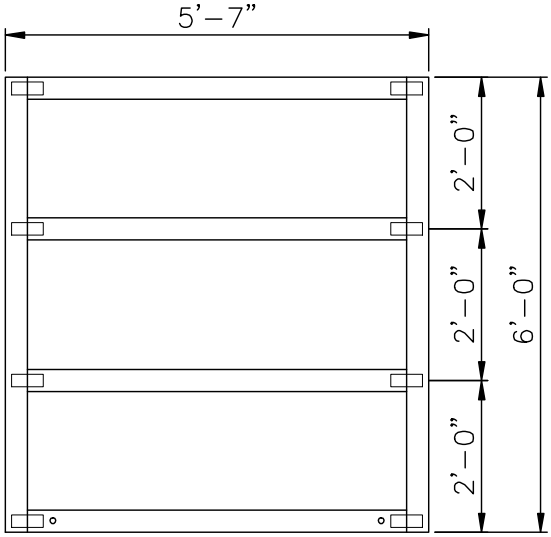

D PLAN – 6' FLOOR FRAME

TT4SS

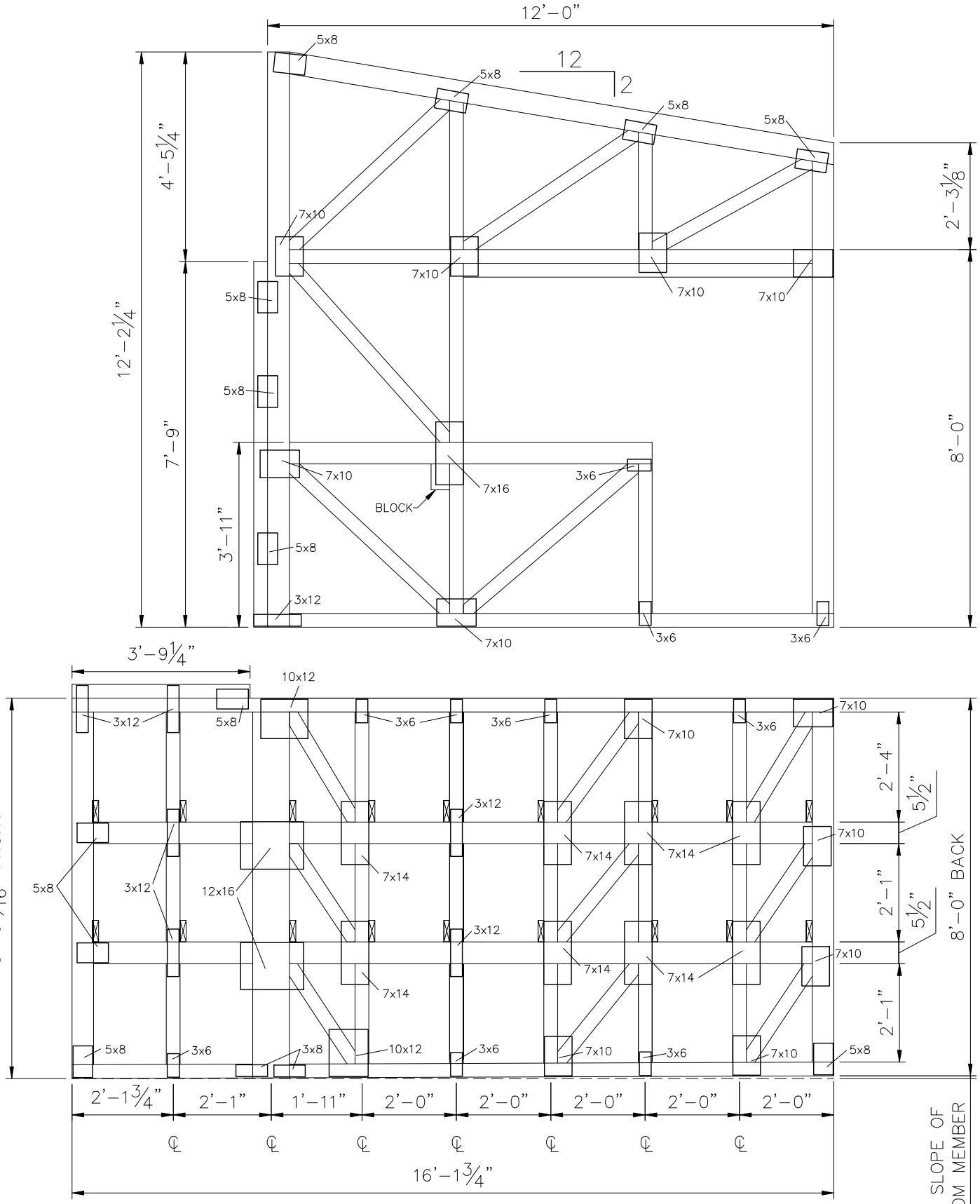

BT2

E SIDE ELEVATION – WOOD FRAME (E)

TT1SS

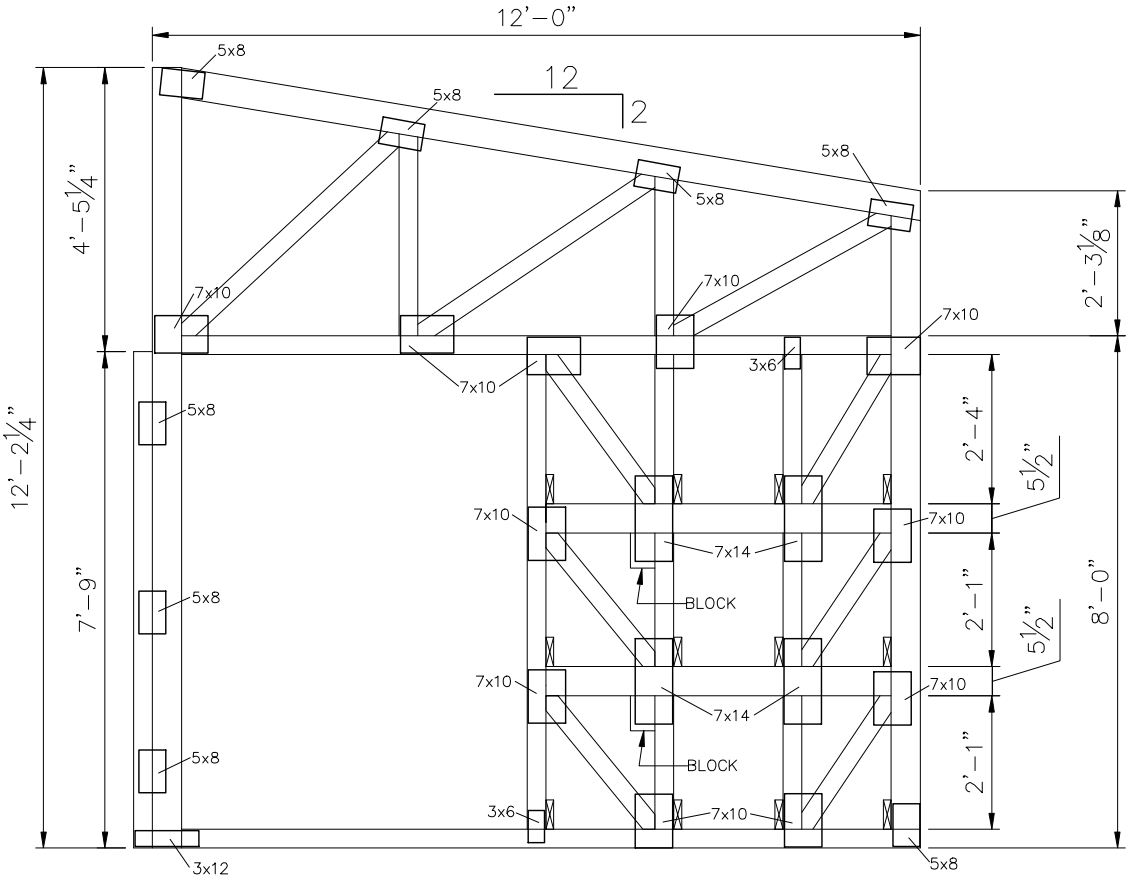

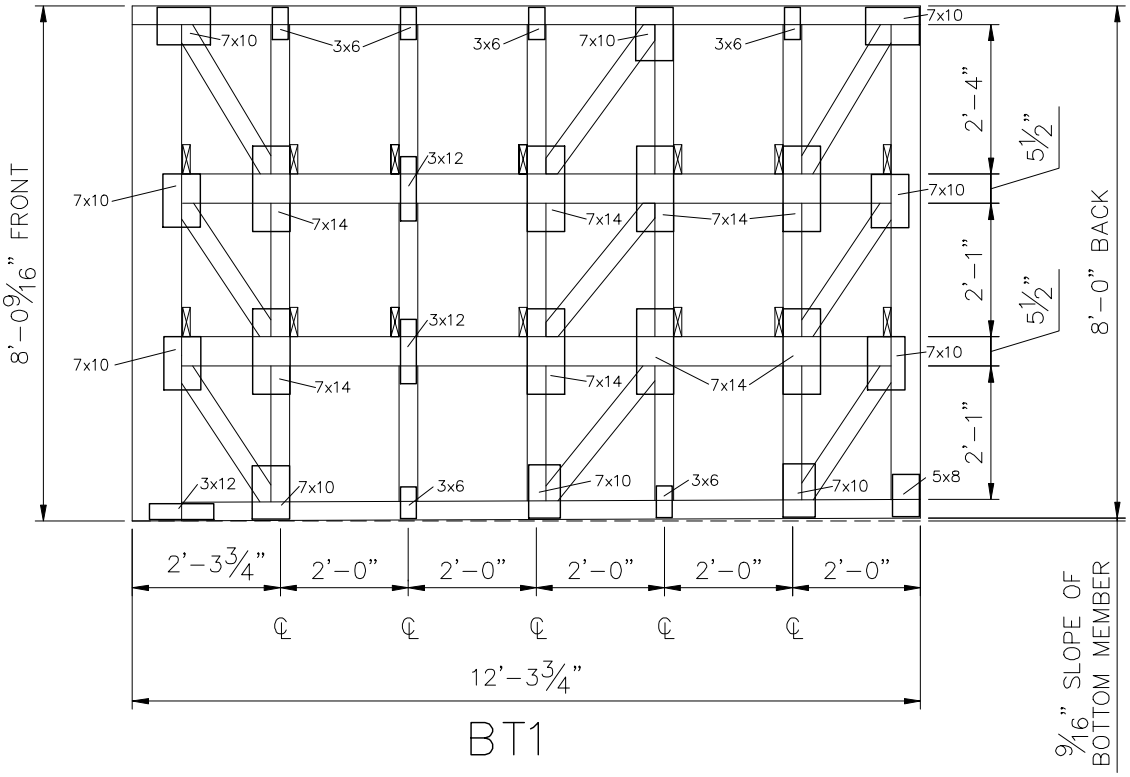

BT1

A SIDE ELEVATION – WOOD FRAME (A)

TT5SS

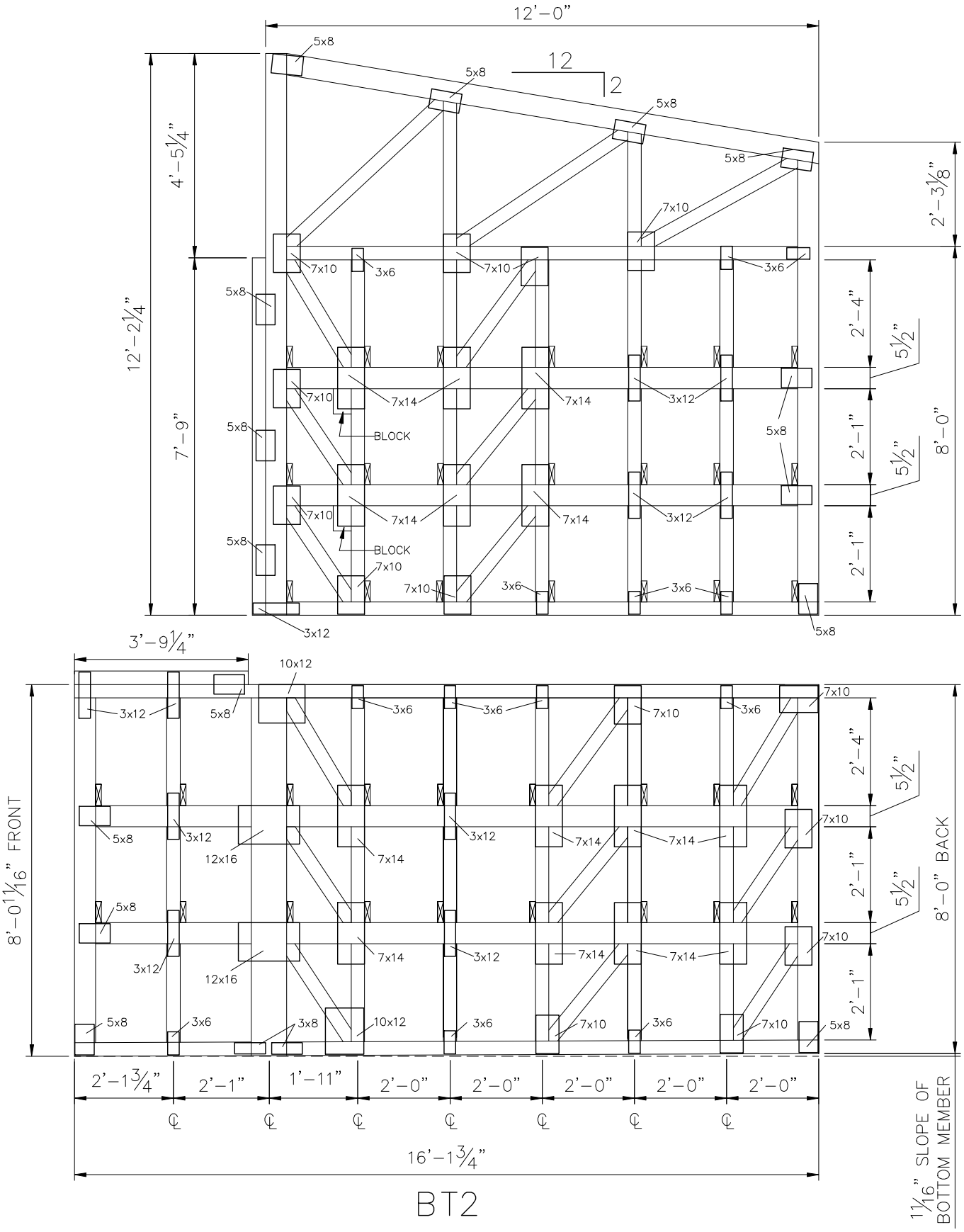

BT2

B SIDE ELEVATION – WOOD FRAME (B)

TT2SS

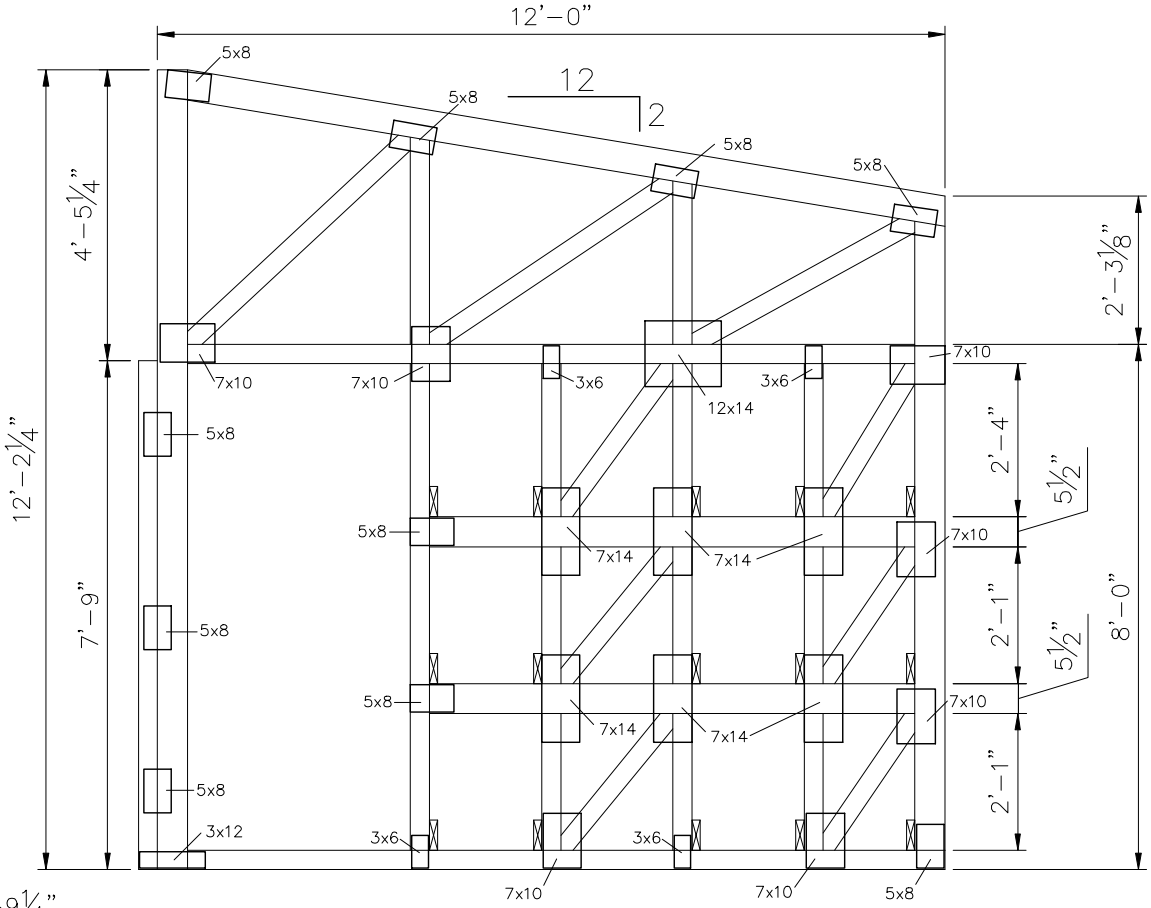

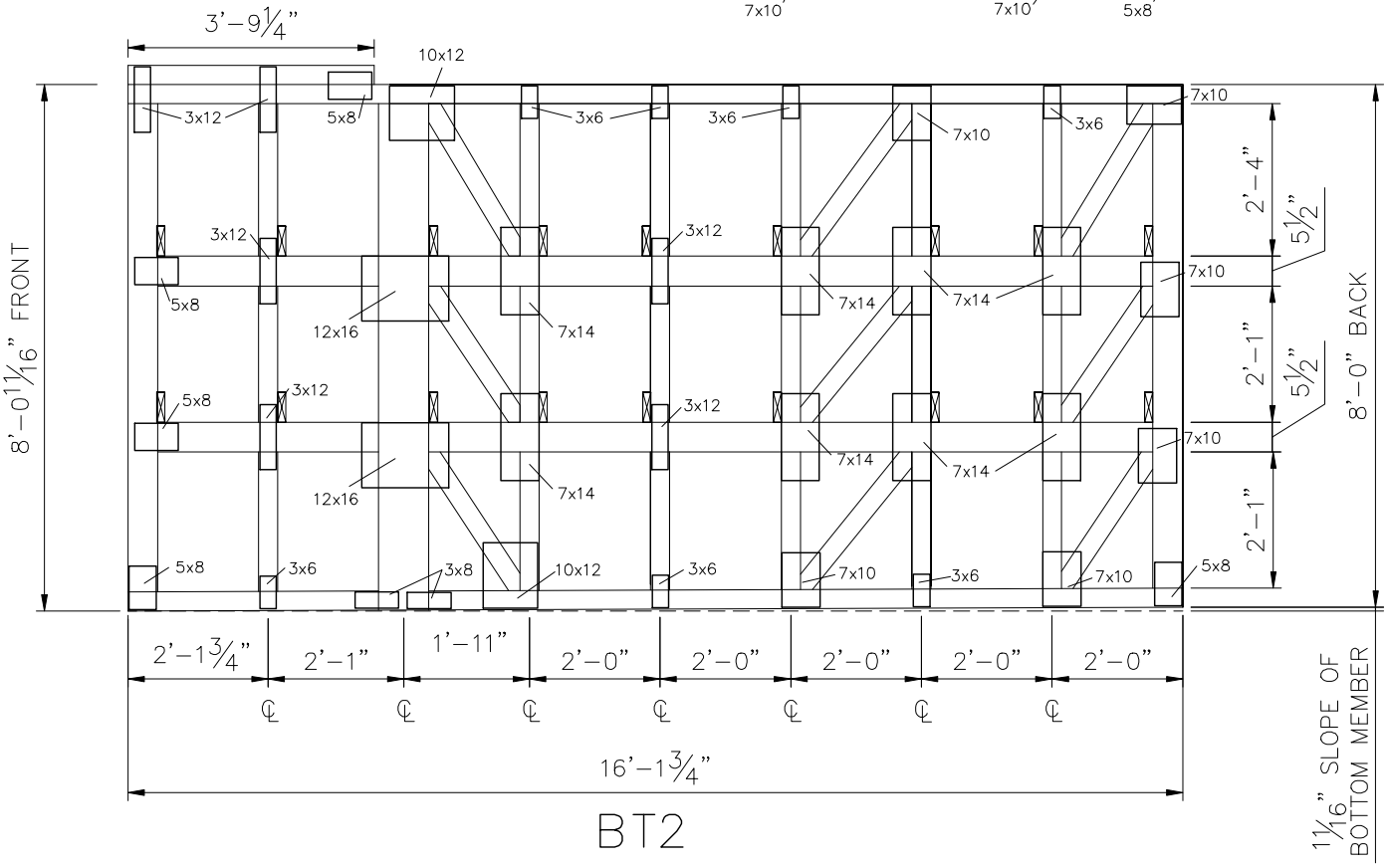

BT2

C SIDE ELEVATION – WOOD FRAME (C)

TT3SS

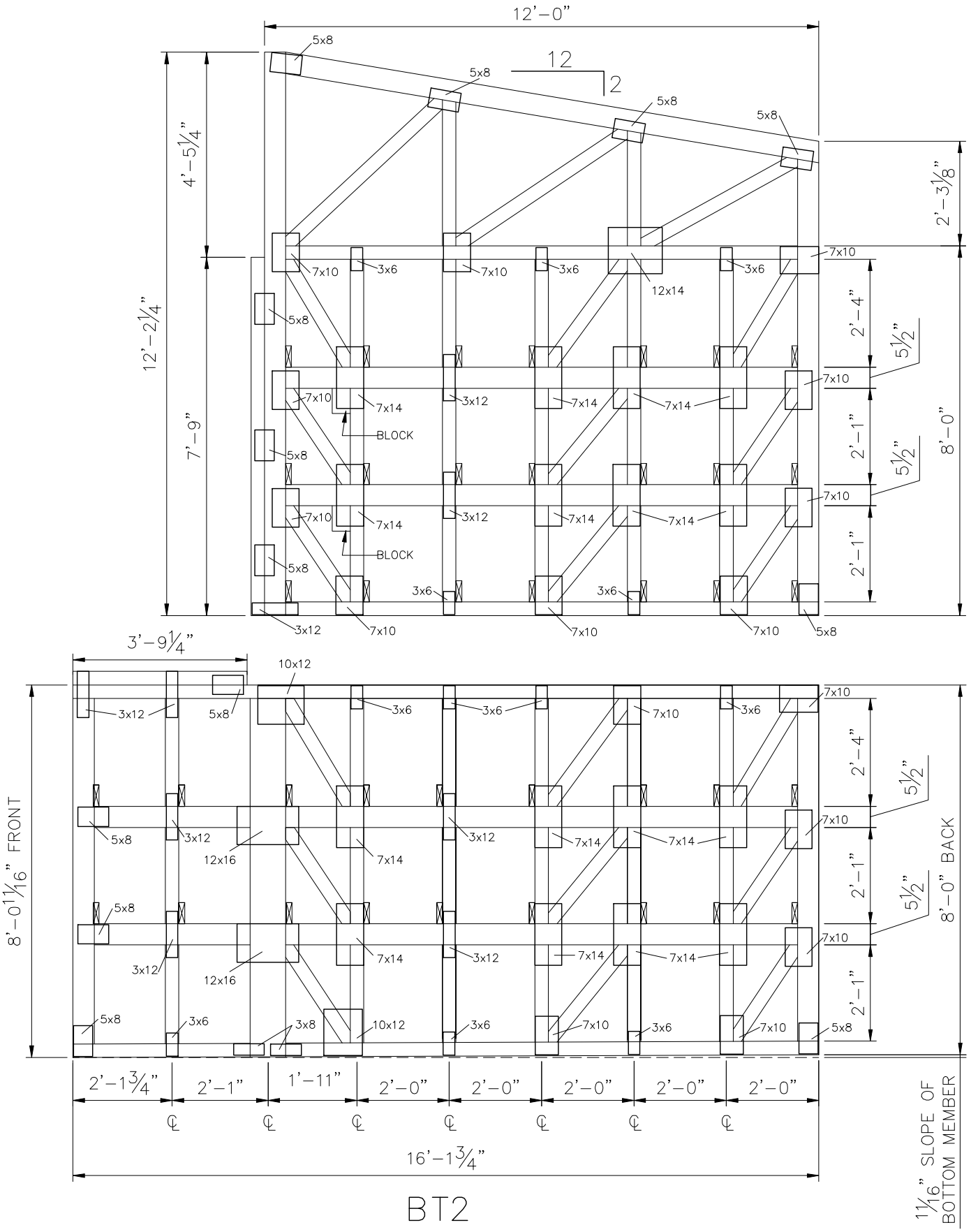

BT2

D SIDE ELEVATION – WOOD FRAME (D)

TT3SS

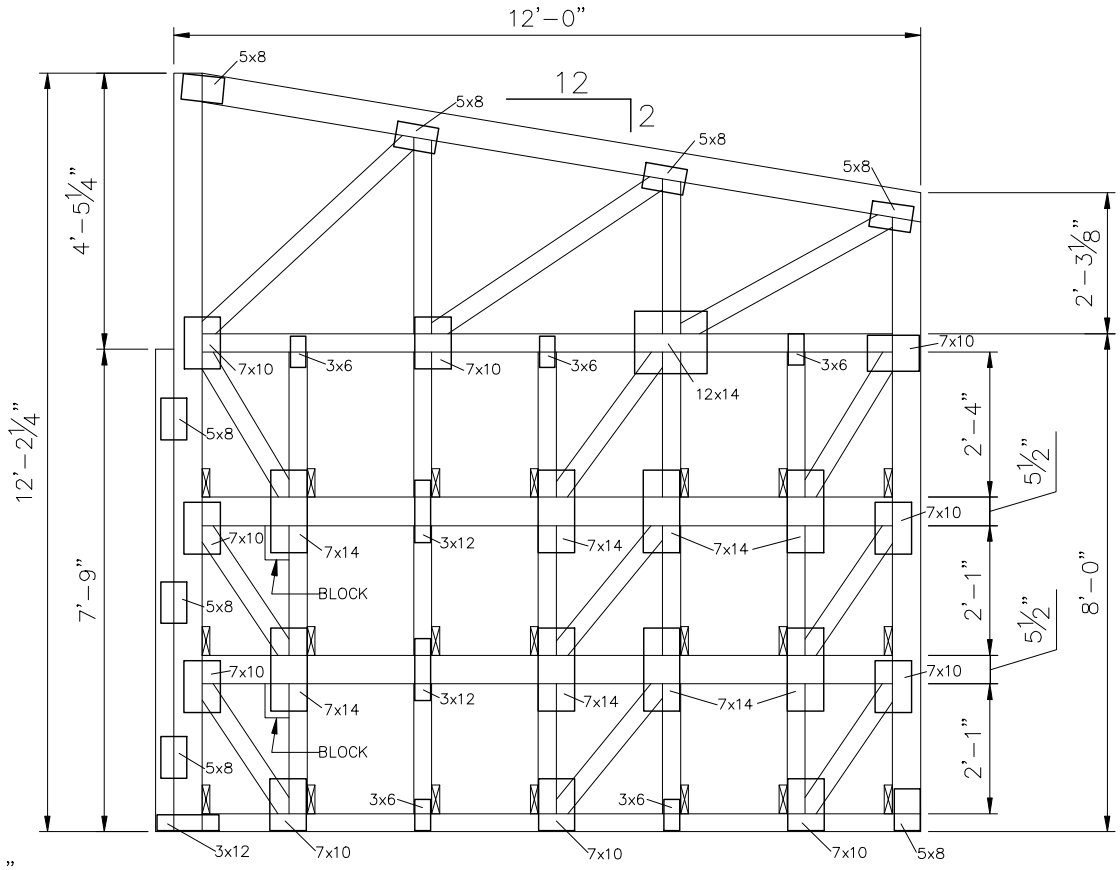

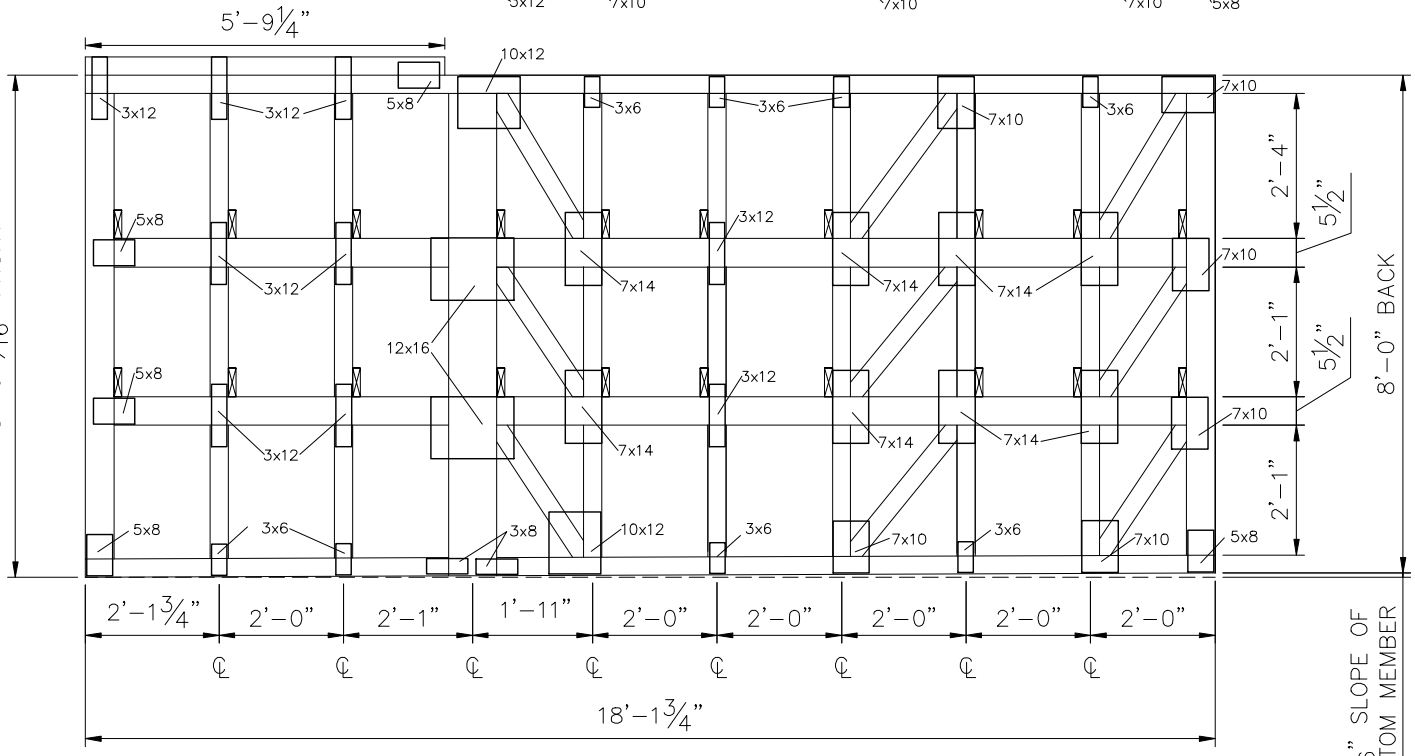

BT3

F SIDE ELEVATION – WOOD FRAME (F)

TT3SS

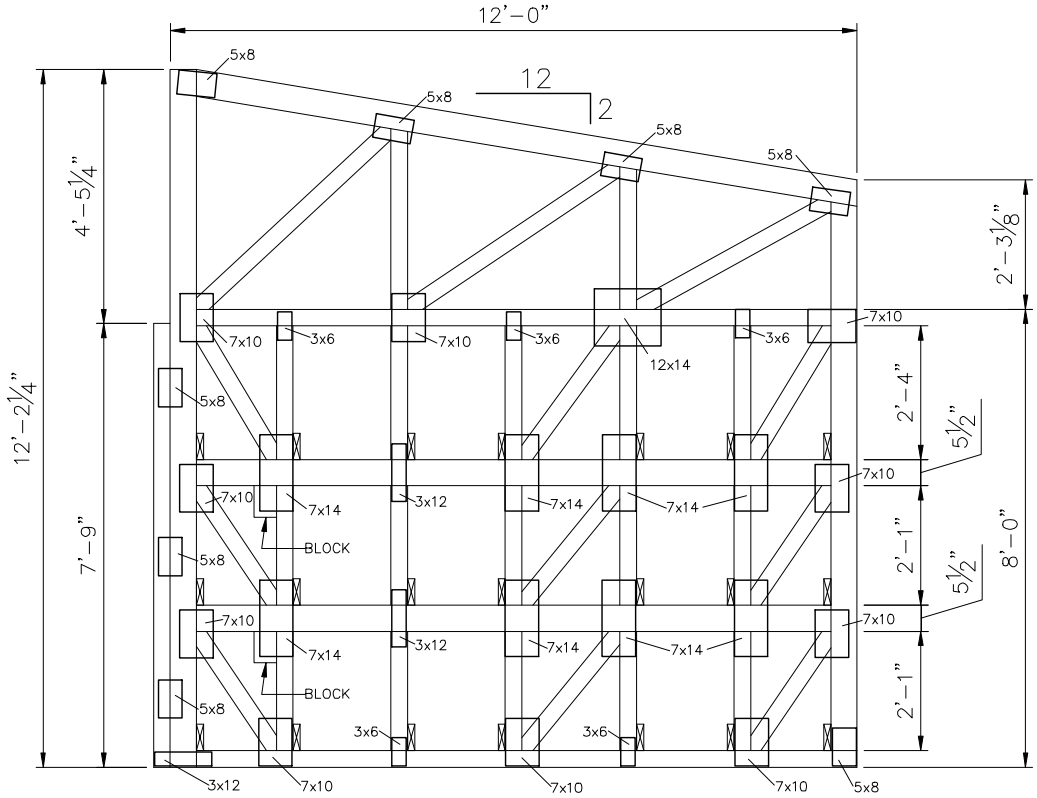

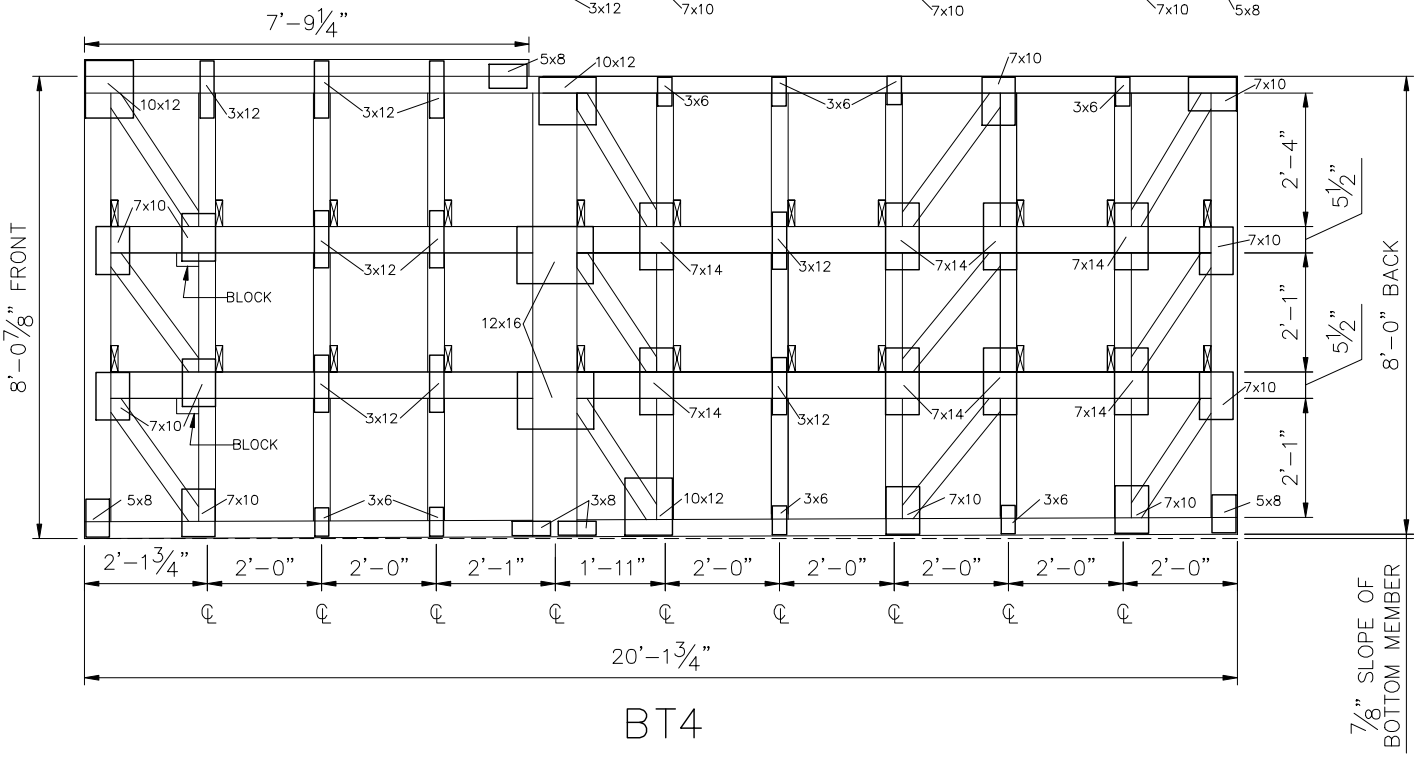

BT4

G SIDE ELEVATION – WOOD FRAME (G)

TT1SS

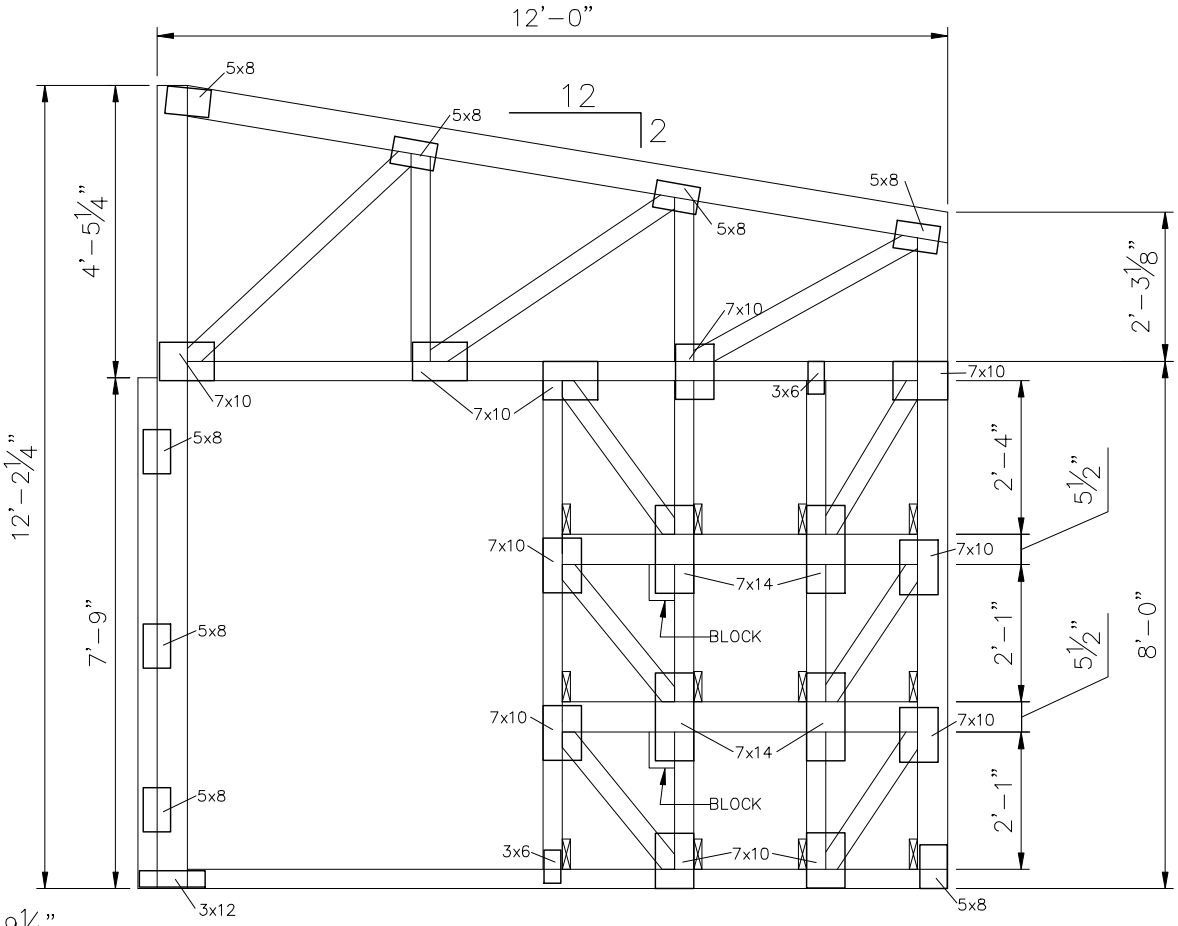

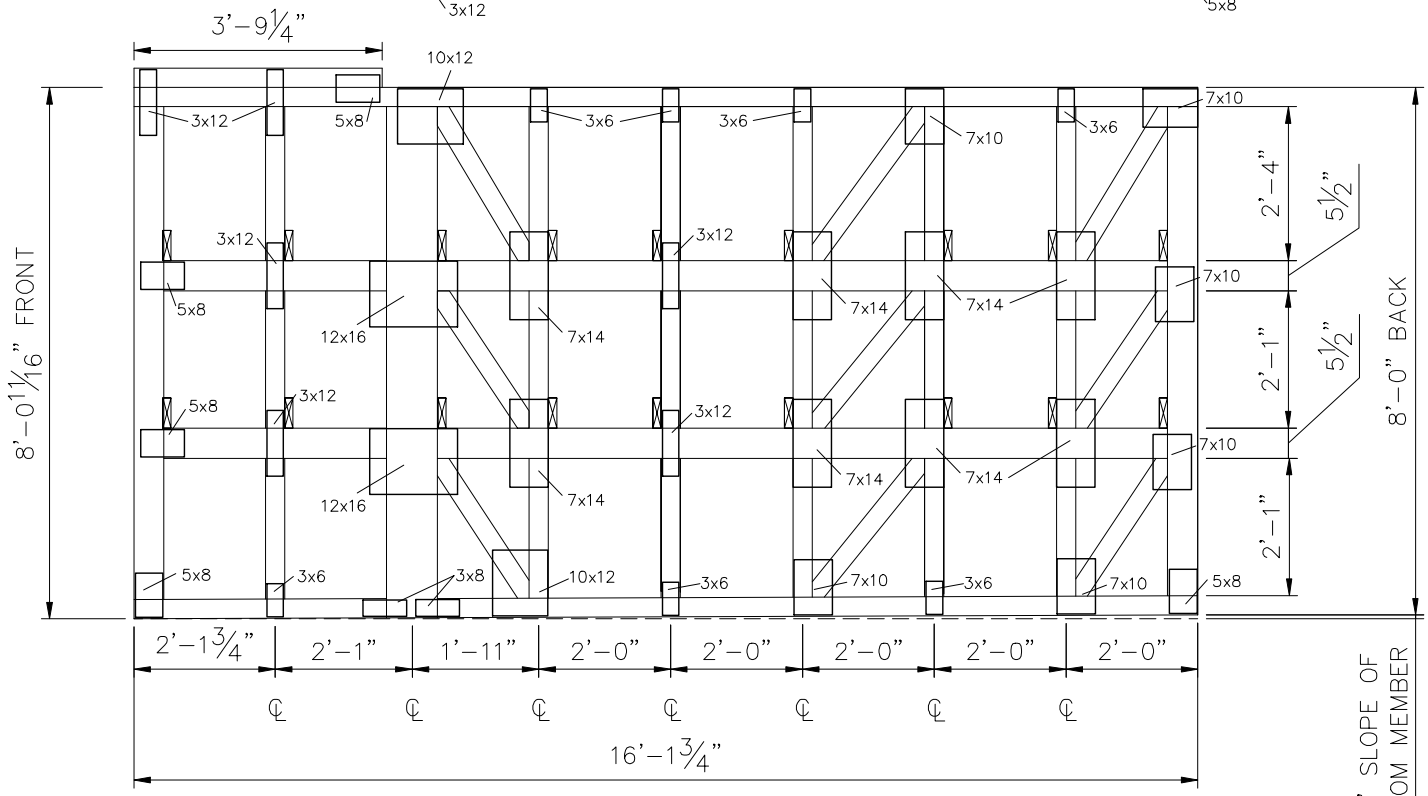

BT2

H SIDE ELEVATION – WOOD FRAME (H)

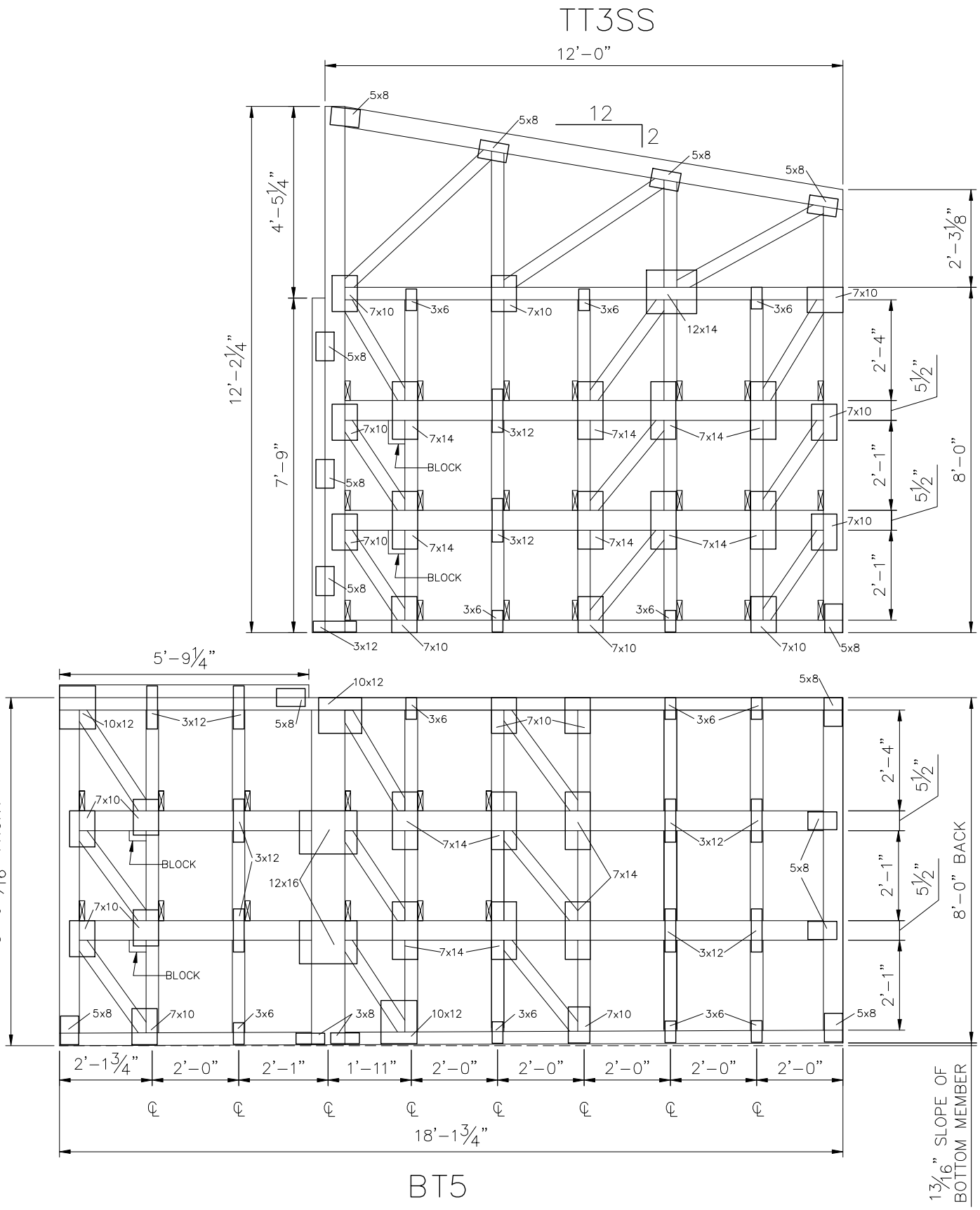

J SIDE ELEVATION – WOOD FRAME (J)

Job	Truss	Truss Type	Qty	Ply	CORP 35 60
QTREC0070703	X3R2006	POST FRAME	28	2	Job Reference (optional)

6.500 s Mar 8 2007 MiTek Industries, Inc. Tue Dec 18 10:24:59 2007 Page 1

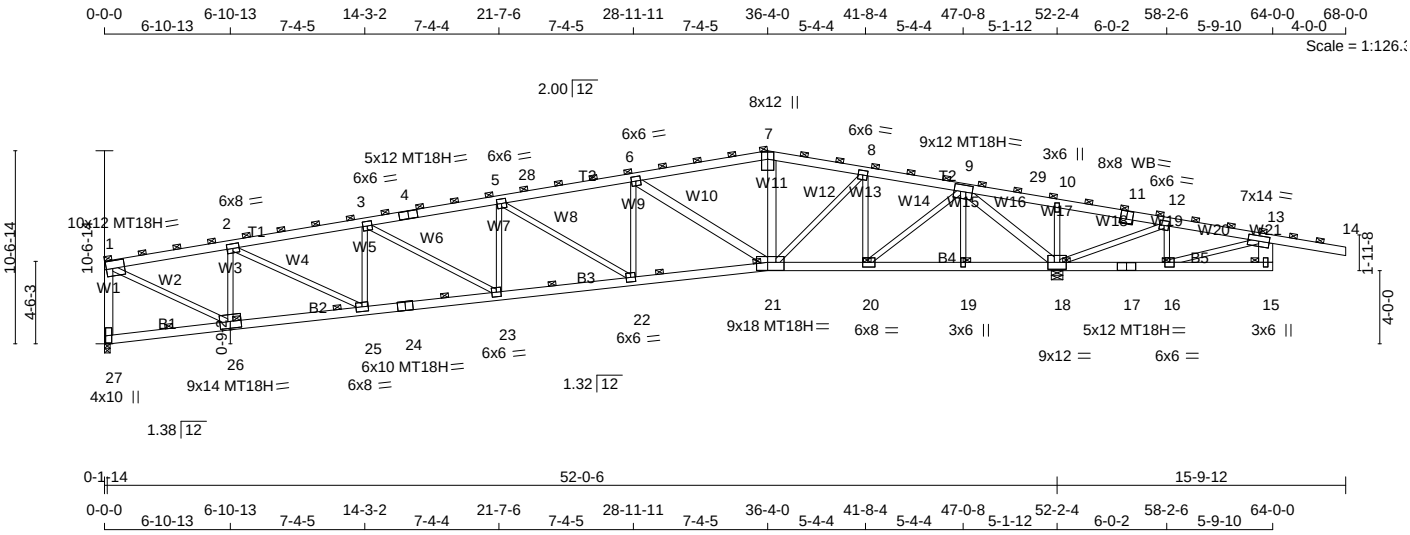

Plate Offsets (X,Y): [1:0-4-4,0-5-0], [7:0-4-12,0-4-0], [11:0-4-0,0-5-4], [20:0-3-8,0-3-0], [21:0-10-12,0-5-4]

LOADING (psf)		SPACING	6-0-0	CSI		DEFL	in	(loc)	l/defl	L/d	PLATES	GRIP
TCLL	20.0	Plates Increase	1.15	TC	0.64	Vert(LL)	0.61	22-23	999	240	MT20	197/144
TCDL	9.0	Lumber Increase	1.15	BC	0.59	Vert(TL)	-0.95	22-23	655	180	MT18H	197/144
BCLL	0.0	Rep Stress Incr	NO	WB	0.94	Horz(TL)	0.30	18	n/a	n/a		
BCDL	4.0	Code IBC2006/TPI2002		(Matrix)							Weight: 793 lb	

PLYTOX4

LUMBER

TOP CHORD 2 X 6 SPF 2100F 1.8E *Except*
T3 2 X 6 SYP 2400F 2.0E
BOT CHORD 2 X 6 SPF 2100F 1.8E *Except*
B1 2 X 6 SYP 2400F 2.0E
WEBS 2 X 4 SPF 2100F 1.8E *Except*
W10 2 X 6 SPF No.2, W11 2 X 6 SPF No.2
W16 2 X 6 SPF 2100F 1.8E, W1 2 X 6 SPF 2100F 1.8E
W21 2 X 10 SYP 2250F 1.9E

BRACING

TOP CHORD 2-0-0 oc purlins (4-8-2 max.), except end verticals.
BOT CHORD 6-0-0 oc bracing.
JOINTS 1 Brace at Jt(s): 7, 21, 26, 1, 15, 13

REACTIONS (lb/size) 27=6025/0-3-12, 18=11111/0-7-9
Max Horz 27=540(LC 8)
Max Uplift 27=-1766(LC 6), 18=-3901(LC 7)
Max Grav 27=6548(LC 3), 18=11111(LC 1)

FORCES (lb) - Maximum Compression/Maximum Tension

TOP CHORD 1-2=-8978/2621, 2-3=-14265/4039, 3-4=-16057/4420, 4-5=-15921/4447, 5-28=-14951/4047, 6-28=-14787/4082, 6-7=-10748/3076, 7-8=-10548/3096, 8-9=-7841/2439, 9-29=-3990/8589, 10-29=-4015/8385, 10-11=-4111/8600, 11-12=-4139/8395, 12-13=-1985/4508, 13-14=0/166, 1-27=-6425/1828, 13-15=-109/209

BOT CHORD 26-27=-428/294, 25-26=-2664/8796, 24-25=-3927/14014, 23-24=-3917/14025, 22-23=-4182/15807, 21-22=-3673/14682, 20-21=-1924/7680, 19-20=-1722/3242, 18-19=-1722/3242, 17-18=-4340/2195, 16-17=-4340/2195, 15-16=-1392/608

WEBS 2-26=-5062/1511, 2-25=-1444/5799, 3-25=-2948/883, 3-23=-326/2021, 5-23=-1001/296, 5-22=-1665/592, 6-22=-255/1207, 6-21=-5027/1373, 7-21=-504/1886, 8-21=-991/3795, 8-20=-4043/1290, 9-20=-1966/6675, 9-19=0/377, 9-18=-12039/3473, 10-18=-1530/564, 12-18=-4354/2437, 12-16=-778/1020, 1-26=-2523/9435, 13-16=-3258/1652

Continued on page 2

NOTES

1) 2-ply truss to be connected together with 10d (0.131"x3") nails as follows:
   Top chords connected as follows: 2 X 6 - 2 rows at 0-9-0 oc, 2 X 10 - 2 rows at 0-9-0 oc.
   Bottom chords connected as follows: 2 X 6 - 2 rows at 0-9-0 oc.
   Webs connected as follows: 2 X 4 - 1 row at 0-9-0 oc, 2 X 6 - 2 rows at 0-9-0 oc.
2) All loads are considered equally applied to all plies, except if noted as front (F) or back (B) face in the LOAD CASE(S) section. Ply to ply connections have been provided to distribute only loads noted as (F) or (B), unless otherwise indicated.
3) Unbalanced roof live loads have been considered for this design.
4) Wind: ASCE 7-05; 90mph; h=22ft; TCDL=5.4psf; BCDL=2.4psf; Category II; Exp C; partially; MWFRS; cantilever left and right exposed ; end vertical left and right exposed; Lumber DOL=1.33 plate grip DOL=1.33.
5) TCLL: ASCE 7-05; Pr=20.0 psf (roof live load: Lumber DOL=1.15 Plate DOL=1.15); Pg=35.0 psf (ground snow); Ps=29.4 psf (roof snow: Lumber DOL=1.15 Plate DOL=1.15); Category II; Exp C; Partially Exp.; Ct=1.2; Unobstructed slippery surface
6) Roof design snow load has been reduced to account for slope.
7) Unbalanced snow loads have been considered for this design.
8) This truss has been designed for greater of min roof live load of 16.0 psf or 1.00 times flat roof load of 29.4 psf on overhangs non-concurrent with other live loads.
9) WARNING: The unusually long span and/or configuration of this truss requires that extreme care be used in its application. Use proper transportation, unloading and erection methods. Assure that all required web lateral bracing is communicated to the building contractor. Ensure that over-all building bracing is designed by a qualified engineer, architect, or building designer.
10) The bottom chord dead load shown is sufficient only to cover the truss weight itself and does not allow for any additional load to be added to the bottom chord.
11) All plates are MT20 plates unless otherwise indicated.
12) This truss has been designed for a 10.0 psf bottom chord live load nonconcurrent with any other live loads.
13) Bearing at joint(s) 27 considers parallel to grain value using ANSI/TPI 1 angle to grain formula. Building designer should verify capacity of bearing surface.
14) Provide mechanical connection (by others) of truss to bearing plate capable of withstanding 1766 lb uplift at joint 27 and 3901 lb uplift at joint 18.
15) This truss is designed in accordance with the 2006 International Building Code section 2306.1 and referenced standard ANSI/TPI 1.

LOAD CASE(S) Standard

Job	Truss	Truss Type	Qty	Ply	CORP 35 60
QTREC0070703	X4R2006	POST FRAME	28	2	Job Reference (optional)

6.500 s Mar 8 2007 MiTek Industries, Inc. Tue Dec 18 10:25:02 2007 Page 1

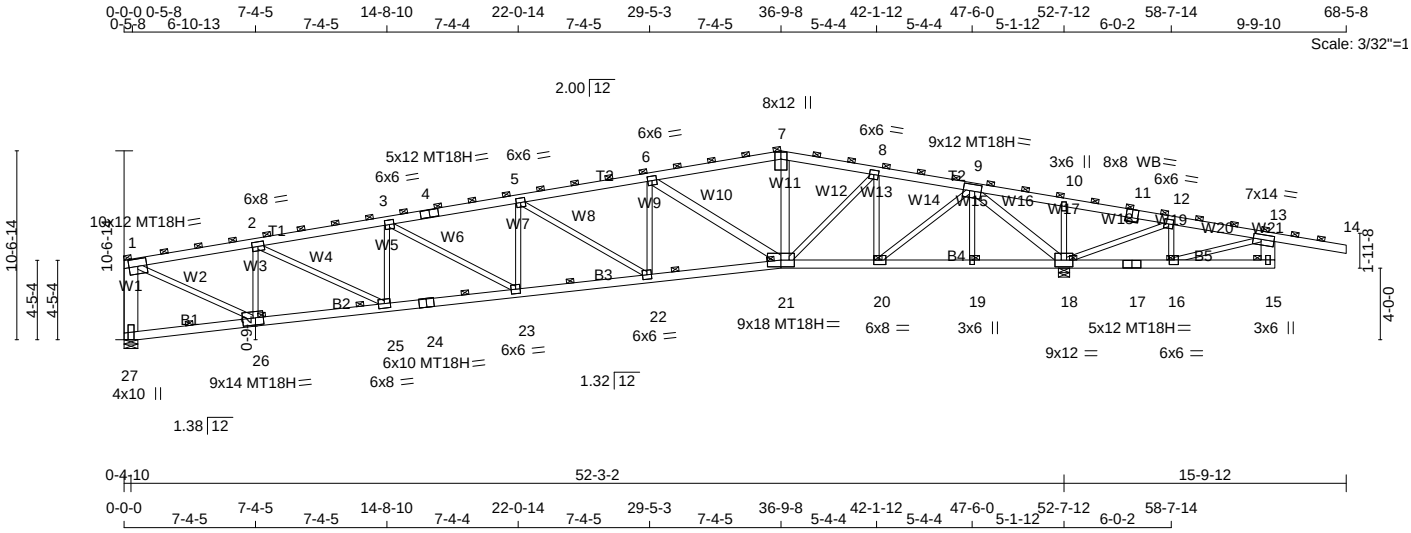

Plate Offsets (X,Y): [7:0-4-12,0-4-0], [11:0-4-0,Edge], [13:0-5-4,0-3-4], [20:0-3-8,0-3-0], [26:0-5-4,0-4-12]

PLY TO X3

LOADING (psf)		**SPACING**	6-0-0	**CSI**		**DEFL**	in	(loc)	l/defl	L/d	**PLATES**	**GRIP**
TCLL	20.0	Plates Increase	1.15	TC	0.92	Vert(LL)	-0.81	22-23	>783	240	MT20	197/144
TCDL	9.0	Lumber Increase	1.15	BC	0.73	Vert(TL)	-1.17	22-23	>542	180	MT18H	197/144
BCLL	0.0	Rep Stress Incr	NO	WB	0.78	Horz(TL)	0.36	18	n/a	n/a		
BCDL	4.0	Code IBC2006/TPI2002		(Matrix)							Weight: 835 lb	

LUMBER

TOP CHORD 2 X 6 SPF 2100F 1.8E *Except*
T3 2 X 6 SYP 2400F 2.0E
BOT CHORD 2 X 6 SPF 2100F 1.8E *Except*
B1 2 X 6 SYP 2400F 2.0E, B4 2 X 6 SYP 2400F 2.0E
WEBS 2 X 4 SPF 2100F 1.8E *Except*
W10 2 X 6 SPF 2100F 1.8E, W11 2 X 6 SPF No.2
W16 2 X 6 SPF 2100F 1.8E, W21 2 X 10 SYP 2250F 1.9E
W1 2 X 10 SYP 2250F 1.9E

BRACING

TOP CHORD 2-0-0 oc purlins (3-8-9 max.), except end verticals.
BOT CHORD 6-0-0 oc bracing.
JOINTS 1 Brace at Jt(s): 7, 21, 26, 15, 13, 1

REACTIONS (lb/size) 27=6031/0-9-4, 18=11191/0-7-9
Max Horz 27=549(LC 8)
Max Uplift 27=-1779(LC 8), 18=-3915(LC 7)
Max Grav 27=8418(LC 3), 18=12814(LC 4)

FORCES (lb) - Maximum Compression/Maximum Tension

TOP CHORD 1-2=-12586/2867, 2-3=-18667/4230, 3-4=-20019/4561, 4-5=-19816/4587, 5-6=-17806/4183, 6-7=-12576/3138, 7-8=-12369/3157, 8-9=-9252/2489, 9-10=-4009/12162, 10-11=-4105/12215, 11-12=-4134/11920, 12-13=-1988/6427, 13-14=0/239, 13-15=-111/211, 1-27=-8470/1886

BOT CHORD 26-27=-635/1306, 25-26=-2908/12301, 24-25=-4117/18324, 23-24=-4106/18336, 22-23=-4321/19673, 21-22=-3773/17483, 20-21=-1973/9070, 19-20=-2231/4063, 18-19=-2231/4063, 17-18=-6184/2198, 16-17=-6184/2198, 15-16=-1761/606

WEBS 2-26=-6262/1464, 2-25=-1384/6692, 3-25=-3430/851, 3-23=-270/1516, 5-23=-715/265, 5-22=-2545/638, 6-22=-285/1751, 6-21=-6212/1419, 7-21=-526/2441, 8-21=-999/4364, 8-20=-4093/1298, 9-20=-1983/6765, 9-19=-21/370, 9-18=-12603/3485, 10-18=-2031/565, 12-18=-6155/2427, 12-16=-773/1386, 13-16=-4603/1658, 1-26=-2540/12068

Continued on page 2

NOTES

1) 2-ply truss to be connected together with 10d (0.131"x3") nails as follows:
   Top chords connected as follows: 2 X 6 - 2 rows at 0-9-0 oc, 2 X 10 - 2 rows at 0-9-0 oc.
   Bottom chords connected as follows: 2 X 6 - 2 rows at 0-9-0 oc.
   Webs connected as follows: 2 X 4 - 1 row at 0-9-0 oc, 2 X 6 - 2 rows at 0-9-0 oc.
2) All loads are considered equally applied to all plies, except if noted as front (F) or back (B) face in the LOAD CASE(S) section. Ply to ply connections have been provided to distribute only loads noted as (F) or (B), unless otherwise indicated.
3) Unbalanced roof live loads have been considered for this design.
4) Wind: ASCE 7-05; 90mph; h=22ft; TCDL=5.4psf; BCDL=2.4psf; Category II; Exp C; partially; MWFRS; cantilever left and right exposed ; end vertical left and right exposed; Lumber DOL=1.33 plate grip DOL=1.33.
5) TCLL: ASCE 7-02; Pr=20.0 psf (roof live load: Lumber DOL=1.15 Plate DOL=1.15); Pg=35.0 psf (ground snow); Ps=29.4 psf (roof snow: Lumber DOL=1.15 Plate DOL=1.15); Category II; Exp C; Partially Exp.; Ct=1.2; Unobstructed slippery surface
6) Roof design snow load has been reduced to account for slope.
7) Unbalanced snow loads have been considered for this design.
8) This truss has been designed for greater of min roof live load of 16.0 psf or 1.00 times flat roof load of 29.4 psf on overhangs non-concurrent with other live loads.
9) WARNING: The unusually long span and/or configuration of this truss requires that extreme care be used in its application. Use proper transportation, unloading and erection methods. Assure that all required web lateral bracing is communicated to the building contractor. Ensure that over-all building bracing is designed by a qualified engineer, architect, or building designer.
10) The bottom chord dead load shown is sufficient only to cover the truss weight itself and does not allow for any additional load to be added to the bottom chord.
11) All plates are MT20 plates unless otherwise indicated.
12) This truss has been designed for a 10.0 psf bottom chord live load nonconcurrent with any other live loads.
13) Bearing at joint(s) 27 considers parallel to grain value using ANSI/TPI 1 angle to grain formula. Building designer should verify capacity of bearing surface.
14) Provide mechanical connection (by others) of truss to bearing plate capable of withstanding 1779 lb uplift at joint 27 and 3915 lb uplift at joint 18.
15) This truss is designed in accordance with the 2006 International Building Code section 2306.1 and referenced standard ANSI/TPI 1.

LOAD CASE(S) Standard

Job	Truss	Truss Type	Qty	Ply	CORP 35 60
QTREC0070703	X1R2006	POST FRAME	28	2	Job Reference (optional)

6.500 s Mar 8 2007 MiTek Industries, Inc. Tue Dec 18 10:24:54 2007 Page 1

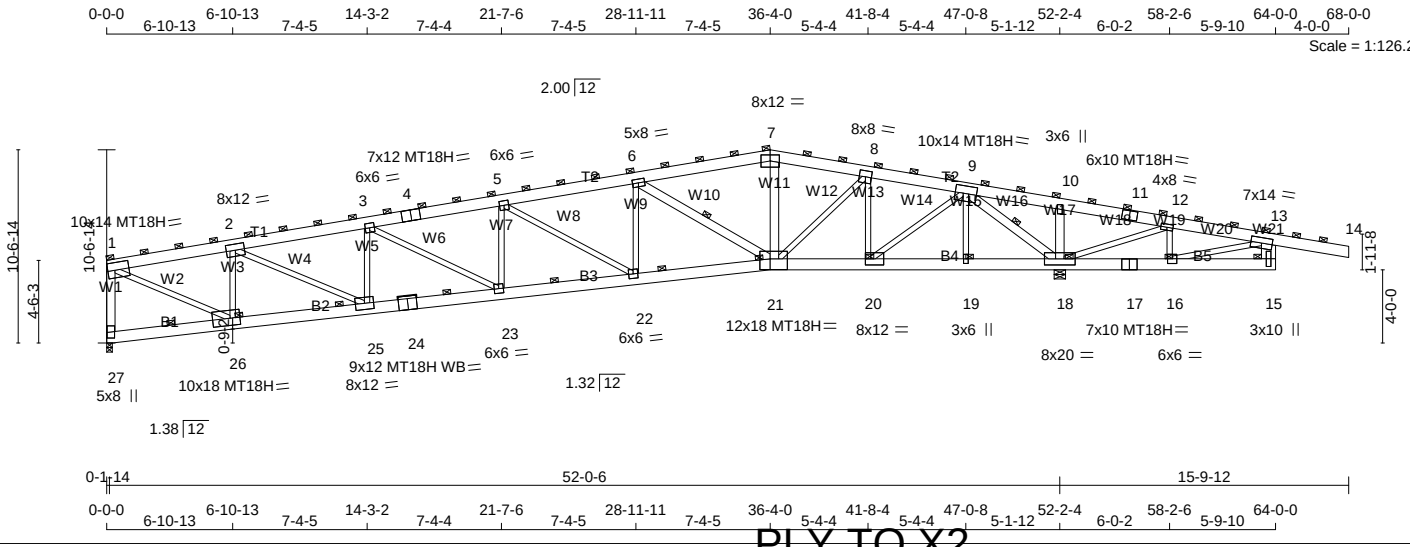

PLY TO X2

Plate Offsets (X,Y): [20:0-3-8,0-4-0], [21:0-11-4,0-7-0], [26:0-4-12,0-4-12]

LOADING (psf)		**SPACING**	6-0-0	**CSI**		**DEFL**	in	(loc)	l/defl	L/d	**PLATES**	**GRIP**
TCLL	20.0	Plates Increase	1.15	TC	0.85	Vert(LL)	-0.98	22-23	>638	240	MT20	197/144
TCDL	9.0	Lumber Increase	1.15	BC	0.69	Vert(TL)	-1.24	22-23	>501	180	MT18H	197/144
BCLL	0.0	Rep Stress Incr	NO	WB	0.95	Horz(TL)	0.36	18	n/a	n/a		
BCDL	4.0	Code IBC2006/TPI2002		(Matrix)							Weight: 1106 lb	

LUMBER
TOP CHORD 2 X 8 SYP 2400F 2.0E
BOT CHORD 2 X 8 SYP 2400F 2.0E
WEBS 2 X 4 SPF 2100F 1.8E *Except*
W10 2 X 6 SPF No.2, W11 2 X 6 SPF No.2
W16 2 X 6 SPF 2100F 1.8E, W17 2 X 6 SPF No.2
W1 2 X 6 SPF 2100F 1.8E, W21 2 X 10 SYP 2250F 1.9E

BRACING
TOP CHORD 2-0-0 oc purlins (3-8-12 max.), except end verticals.
BOT CHORD 6-0-0 oc bracing.
WEBS 1 Row at midpt 6-21, 9-18
JOINTS 1 Brace at Jt(s): 7, 21, 26, 1, 15, 13

REACTIONS (lb/size) 27=8995/0-5-2 (input: 0-3-12), 18=16680/0-7-13 (input: 0-7-9)
Max Horz 27=540(LC 8)
Max Uplift 27=-1765(LC 6), 18=-3901(LC 7)
Max Grav 27=12554(LC 3), 18=18811(LC 4)

FORCES (lb) - Maximum Compression/Maximum Tension
TOP CHORD 1-2=-17520/2681, 2-3=-27252/4135, 3-4=-29612/4520, 4-5=-29303/4546, 5-6=-26447/4165, 6-7=-18712/3136, 7-8=-18394/3155, 8-9=-13766/2484, 9-10=-4094/18690, 10-11=-4201/18820, 11-12=-4230/18368, 12-13=-2133/10387, 13-14=0/366, 1-27=-12299/1819, 13-15=-129/196
BOT CHORD 26-27=-451/700, 25-26=-2736/17120, 24-25=-4037/26737, 23-24=-4027/26749, 22-23=-4295/29088, 21-22=-3769/25956, 20-21=-1984/13495, 19-20=-4152/6231, 18-19=-4152/6231, 17-18=-10003/2331, 16-17=-10003/2331, 15-16=-3554/794
WEBS 2-26=-9680/1505, 2-25=-1472/10594, 3-25=-5381/877, 3-23=-326/2630, 5-23=-1334/293, 5-22=-3609/606, 6-22=-255/2347, 6-21=-9096/1386, 7-21=-508/3503, 8-21=-1002/6402, 8-20=-6053/1281, 9-20=-2014/10202, 9-19=-305/301, 9-18=-18200/3446, 10-18=-3405/631, 12-18=-8872/2352, 12-16=-715/1772, 1-26=-2554/18052, 13-16=-6665/1588

Continued on page 2

NOTES

1) 2-ply truss to be connected together with 10d (0.131"x3") nails as follows:
   Top chords connected as follows: 2 X 8 - 2 rows at 0-9-0 oc, 2 X 6 - 2 rows at 0-9-0 oc, 2 X 10 - 2 rows at 0-9-0 oc.
   Bottom chords connected as follows: 2 X 8 - 2 rows at 0-9-0 oc.
   Webs connected as follows: 2 X 4 - 1 row at 0-9-0 oc, 2 X 6 - 2 rows at 0-9-0 oc.
2) All loads are considered equally applied to all plies, except if noted as front (F) or back (B) face in the LOAD CASE(S) section. Ply to ply connections have been provided to distribute only loads noted as (F) or (B), unless otherwise indicated.
3) Unbalanced roof live loads have been considered for this design.
4) Wind: ASCE 7-05; 90mph; h=22ft; TCDL=5.4psf; BCDL=2.4psf; Category II; Exp C; partially; MWFRS; cantilever left and right exposed ; end vertical left and right exposed; Lumber DOL=1.33 plate grip DOL=1.33.
5) TCLL: ASCE 7-02; Pr=20.0 psf (roof live load: Lumber DOL=1.15 Plate DOL=1.15); Pg=60.0 psf (ground snow); Ps=50.4 psf (roof snow: Lumber DOL=1.15 Plate DOL=1.15); Category II; Exp C; Partially Exp.; Ct=1.2; Unobstructed slippery surface
6) Roof design snow load has been reduced to account for slope.
7) Unbalanced snow loads have been considered for this design.
8) This truss has been designed for greater of min roof live load of 16.0 psf or 1.00 times flat roof load of 50.4 psf on overhangs non-concurrent with other live loads.
9) WARNING: The unusually long span and/or configuration of this truss requires that extreme care be used in its application. Use proper transportation, unloading and erection methods. Assure that all required web lateral bracing is communicated to the building contractor. Ensure that over-all building bracing is designed by a qualified engineer, architect, or building designer.
10) The bottom chord dead load shown is sufficient only to cover the truss weight itself and does not allow for any additional load to be added to the bottom chord.
11) All plates are MT20 plates unless otherwise indicated.
12) This truss has been designed for a 10.0 psf bottom chord live load nonconcurrent with any other live loads.
13) WARNING: Required bearing size at joint(s) 27, 18 greater than input bearing size.
14) Bearing at joint(s) 27 considers parallel to grain value using ANSI/TPI 1 angle to grain formula. Building designer should verify capacity of bearing surface.
15) Provide mechanical connection (by others) of truss to bearing plate capable of withstanding 1765 lb uplift at joint 27 and 3901 lb uplift at joint 18.
16) This truss is designed in accordance with the 2006 International Building Code section 2306.1 and referenced standard ANSI/TPI 1.

LOAD CASE(S) Standard

Job	Truss	Truss Type	Qty	Ply	CORP 35 60
QTREC0070703	X2R2006	POST FRAME	28	2	Job Reference (optional)

6.500 s Mar 8 2007 MiTek Industries, Inc. Tue Dec 18 10:24:57 2007 Page 1

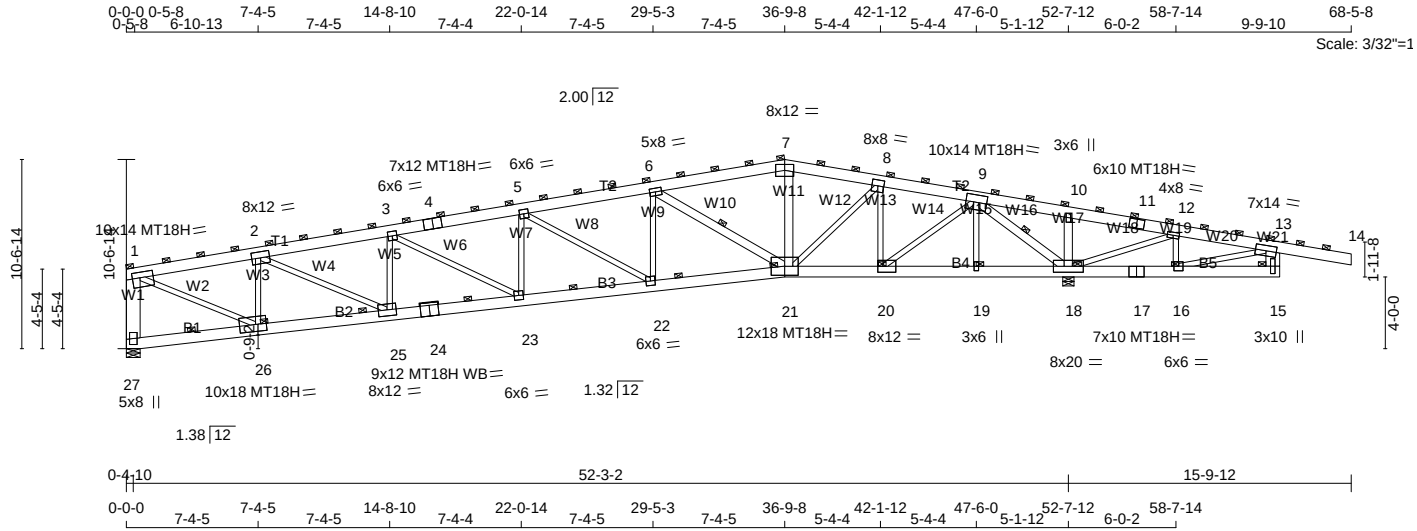

Plate Offsets (X,Y): [1:0-5-4,0-3-12], [20:0-3-8,0-4-0], [26:0-5-8,0-4-12]

PLY TO X1

LOADING (psf)		**SPACING**	6-0-0	**CSI**		**DEFL**	in	(loc)	l/defl	L/d	**PLATES**	**GRIP**
TCLL	20.0	Plates Increase	1.15	TC	0.85	Vert(LL)	-1.03	22-23	>615	240	MT20	197/144
TCDL	9.0	Lumber Increase	1.15	BC	0.71	Vert(TL)	-1.31	22-23	>484	180	MT18H	197/144
BCLL	0.0	Rep Stress Incr	NO	WB	0.94	Horz(TL)	0.38	18	n/a	n/a		
BCDL	4.0	Code IBC2006/TPI2002		(Matrix)							Weight: 1127 lb	

LUMBER
TOP CHORD 2 X 8 SYP 2400F 2.0E
BOT CHORD 2 X 8 SYP 2400F 2.0E
WEBS 2 X 4 SPF 2100F 1.8E *Except*
W10 2 X 6 SPF No.2, W11 2 X 6 SPF No.2
W16 2 X 6 SPF 2100F 1.8E, W17 2 X 6 SPF No.2
W21 2 X 10 SYP 2250F 1.9E, W1 2 X 10 SYP 2250F 1.9E

BRACING
TOP CHORD 2-0-0 oc purlins (3-7-3 max.), except end verticals.
BOT CHORD 6-0-0 oc bracing.
WEBS 1 Row at midpt 6-21, 9-18
JOINTS 1 Brace at Jt(s): 7, 21, 26, 15, 13, 1

REACTIONS (lb/size) 27=9000/0-9-4, 18=16799/0-7-13 (input: 0-7-9)
Max Horz 27=549(LC 8)
Max Uplift 27=-1779(LC 8), 18=-3914(LC 7)
Max Grav 27=12559(LC 3), 18=18864(LC 4)

FORCES (lb) - Maximum Compression/Maximum Tension
TOP CHORD 1-2=-19265/2929, 2-3=-28604/4332, 3-4=-30606/4664, 4-5=-30296/4691, 5-6=-27147/4267, 6-7=-19159/3201, 7-8=-18841/3220, 8-9=-14111/2534, 9-10=-4093/18688, 10-11=-4200/18818, 11-12=-4229/18367, 12-13=-2133/10387, 13-14=0/366, 13-15=-129/196, 1-27=-12615/1879
BOT CHORD 26-27=-692/2304, 25-26=-2981/18805, 24-25=-4233/28085, 23-24=-4223/28096, 22-23=-4439/30074, 21-22=-3871/26652, 20-21=-2034/13835, 19-20=-4087/6434, 18-19=-4087/6434, 17-18=-10004/2331, 16-17=-10004/2331, 15-16=-3554/794
WEBS 2-26=-9289/1447, 2-25=-1420/10224, 3-25=-5176/848, 3-23=-267/2222, 5-23=-1105/260, 5-22=-3943/655, 6-22=-285/2549, 6-21=-9394/1430, 7-21=-529/3646, 8-21=-1013/6541, 8-20=-6130/1290, 9-20=-2028/10327, 9-19=-306/300, 9-18=-18281/3466, 10-18=-3406/632, 12-18=-8869/2352, 12-16=-715/1772, 13-16=-6666/1588, 1-26=-2534/17946

Continued on page 2

NOTES

1) 2-ply truss to be connected together with 10d (0.131"x3") nails as follows:
   Top chords connected as follows: 2 X 8 - 2 rows at 0-9-0 oc, 2 X 10 - 2 rows at 0-9-0 oc.
   Bottom chords connected as follows: 2 X 8 - 2 rows at 0-9-0 oc.
   Webs connected as follows: 2 X 4 - 1 row at 0-9-0 oc, 2 X 6 - 2 rows at 0-9-0 oc.
2) All loads are considered equally applied to all plies, except if noted as front (F) or back (B) face in the LOAD CASE(S) section. Ply to ply connections have been provided to distribute only loads noted as (F) or (B), unless otherwise indicated.
3) Unbalanced roof live loads have been considered for this design.
4) Wind: ASCE 7-05; 90mph; h=22ft; TCDL=5.4psf; BCDL=2.4psf; Category II; Exp C; partially; MWFRS; cantilever left and right exposed ; end vertical left and right exposed; Lumber DOL=1.33 plate grip DOL=1.33.
5) TCLL: ASCE 7-02; Pr=20.0 psf (roof live load: Lumber DOL=1.15 Plate DOL=1.15); Pg=60.0 psf (ground snow); Ps=50.4 psf (roof snow: Lumber DOL=1.15 Plate DOL=1.15); Category II; Exp C; Partially Exp.; Ct=1.2; Unobstructed slippery surface
6) Roof design snow load has been reduced to account for slope.
7) Unbalanced snow loads have been considered for this design.
8) This truss has been designed for greater of min roof live load of 16.0 psf or 1.00 times flat roof load of 50.4 psf on overhangs non-concurrent with other live loads.
9) WARNING: The unusually long span and/or configuration of this truss requires that extreme care be used in its application. Use proper transportation, unloading and erection methods. Assure that all required web lateral bracing is communicated to the building contractor. Ensure that over-all building bracing is designed by a qualified engineer, architect, or building designer.
10) The bottom chord dead load shown is sufficient only to cover the truss weight itself and does not allow for any additional load to be added to the bottom chord.
11) All plates are MT20 plates unless otherwise indicated.
12) This truss has been designed for a 10.0 psf bottom chord live load nonconcurrent with any other live loads.
13) WARNING: Required bearing size at joint(s) 18 greater than input bearing size.
14) Bearing at joint(s) 27 considers parallel to grain value using ANSI/TPI 1 angle to grain formula. Building designer should verify capacity of bearing surface.
15) Provide mechanical connection (by others) of truss to bearing plate capable of withstanding 1779 lb uplift at joint 27 and 3914 lb uplift at joint 18.
16) This truss is designed in accordance with the 2006 International Building Code section 2306.1 and referenced standard ANSI/TPI 1.

LOAD CASE(S) Standard

Job	Truss	Truss Type	Qty	Ply	
QTR012995	P1	COMMON	1	1	Job Reference (optional)

Midwest Manufacturing Truss Plant, Eau Claire, Wi 54703 — 7.030 s Jan 3 2008 MiTek Industries, Inc. Thu Jun 18 12:28:49 2009 Page 1

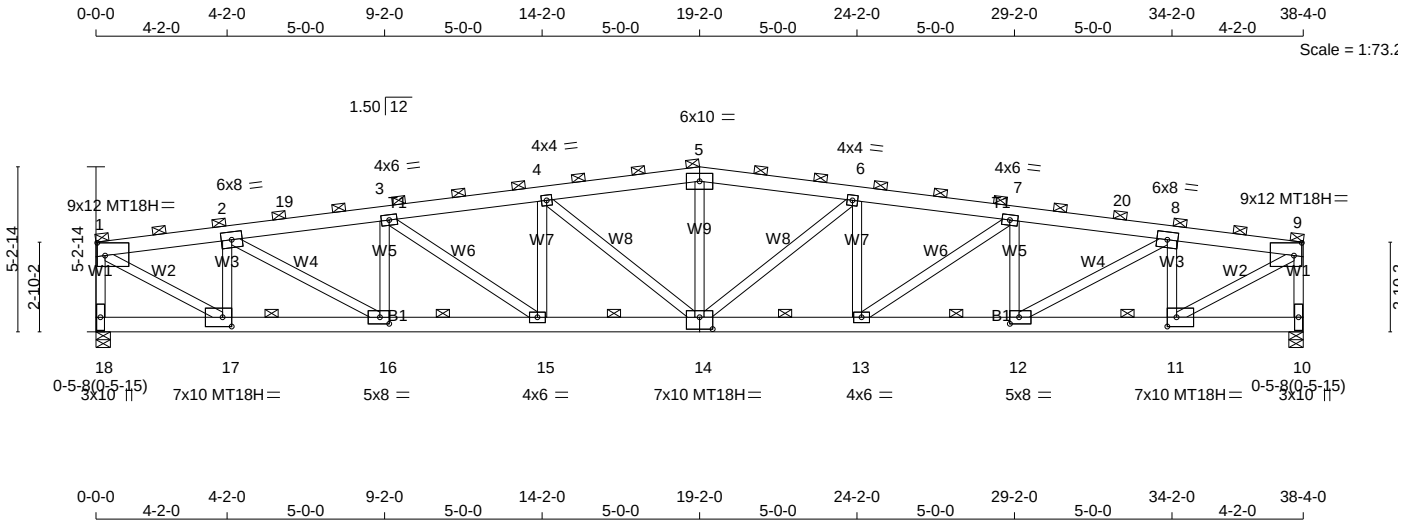

Plate Offsets (X,Y): [1:0-3-0,0-4-14], [9:0-3-0,0-4-14], [11:0-3-8,0-3-8], [12:0-3-8,0-2-8], [14:0-5-0,0-4-8], [16:0-3-8,0-2-8], [17:0-3-8,0-3-8]

LOADING (psf)		**SPACING**	3-0-0	**CSI**		**DEFL**	in	(loc)	l/defl	L/d	**PLATES**	**GRIP**
TCLL	20.0	Plates Increase	1.15	TC	0.79	Vert(LL)	-0.62	14	>739	240	MT20	197/144
TCDL	10.0	Lumber Increase	1.15	BC	0.84	Vert(TL)	-0.85	14	>538	180	MT18H	197/144
BCLL	0.0	Rep Stress Incr	NO	WB	0.86	Horz(TL)	0.20	10	n/a	n/a		
BCDL	5.0	Code IBC2003/TPI2002		(Matrix)							Weight: 217 lb	

LUMBER
TC 2 X 6 SPF 2100F 1.8E
BC 2 X 6 SPF 2100F 1.8E
W4 2 X 4 SPF No.1 or SPF No.2, W8 2 X 4 SPF 2100F 1.8E
W8 2 X 4 SPF 2100F 1.8E, W4 2 X 4 SPF No.1 or SPF No.2
W1 2 X 4 SPF 2100F 1.8E, W2 2 X 4 SPF 2100F 1.8E
WB 2 X 4 SPF Stud *Except* W1 2 X 4 SPF 2100F 1.8E, W2 2 X 4 SPF 2100F 1.8E

BRACING
TOP CHORD 2-0-0 oc purlins (2-10-5 max.), except end verticals.
BOT CHORD 6-0-0 oc bracing.
JOINTS 1 Brace at Jt(s): 5, 1, 9

REACTIONS (lb/size) 18=4259/0-5-15 (input: 0-5-8), 10=4259/0-5-15 (input: 0-5-8)
Max Horz 18=-73(LC 7)
Max Uplift18=-997(LC 7), 10=-997(LC 8)
Max Grav 18=4685(LC 3), 10=4685(LC 4)

FORCES (lb) - Max. Comp./Max. Ten. - All forces 250 (lb) or less except when shown.
TOP CHORD 1-2=-5843/1632, 2-19=-8625/2531, 3-19=-8534/2534, 3-4=-9261/2781, 4-5=-8700/2645, 5-6=-8700/2645, 6-7=-9261/2781, 7-20=-8534/2534, 8-20=-8625/2531, 8-9=-5843/1632, 1-18=-4569/1224, 9-10=-4569/1224
BOT CHORD 16-17=-1447/5728, 15-16=-2297/8468, 14-15=-2491/9124, 13-14=-2491/9124, 12-13=-2297/8468, 11-12=-1447/5728
WEBS 2-17=-3306/933, 2-16=-983/3505, 3-16=-1686/541, 3-15=-237/1419, 4-15=-757/186, 4-14=-2145/998, 5-14=-269/1029, 6-14=-2145/998, 6-13=-757/186, 7-13=-237/1419, 7-12=-1686/541, 8-12=-983/3505, 8-11=-3306/933, 1-17=-1707/6409, 9-11=-1707/6409

NOTES (12)
1) Unbalanced roof live loads have been considered for this design.

Continued on page 2

NOTES (12)

2) Wind: ASCE 7-02; 90mph; h=17ft; TCDL=2.4psf; BCDL=3.0psf; Category II; Exp C; partially; MWFRS (low-rise) gable end zone and C-C Exterior(2) zone; cantilever left and right exposed ; end vertical left and right exposed; Lumber DOL=1.33 plate grip DOL=1.33. This truss is designed for C-C for members and forces, and for MWFRS for reactions specified.
3) TCLL: ASCE 7-02; Pr=20.0 psf (roof live load: Lumber DOL=1.15 Plate DOL=1.15); Pg=71.0 psf (ground snow); Ps=59.6 psf (roof snow: Lumber DOL=1.15 Plate DOL=1.15); Category II; Exp C; Partially Exp.; Ct=1.2; Unobstructed slippery surface
4) Roof design snow load has been reduced to account for slope.
5) Unbalanced snow loads have been considered for this design.
6) This truss has been designed for a 10.0 psf bottom chord live load nonconcurrent with any other live loads.
7) All plates are MT20 plates unless otherwise indicated.
8) WARNING: Required bearing size at joint(s) 18, 10 greater than input bearing size.
9) Provide mechanical connection (by others) of truss to bearing plate capable of withstanding 997 lb uplift at joint 18 and 997 lb uplift at joint 10.
10) This truss is designed in accordance with the 2003 International Building Code section 2306.1 and referenced standard ANSI/TPI 1.
11) Design assumes 4x2 (flat orientation) purlins at oc spacing indicated, fastened to truss TC w/ 2-10d nails.
12) Plate Approval Numbers: ESR-5243, and ESR-1352.

LOAD CASE(S) Standard

Job	Truss	Truss Type	Qty	Ply	
QTR012995	P2	POST FRAME	8	1	Job Reference (optional)

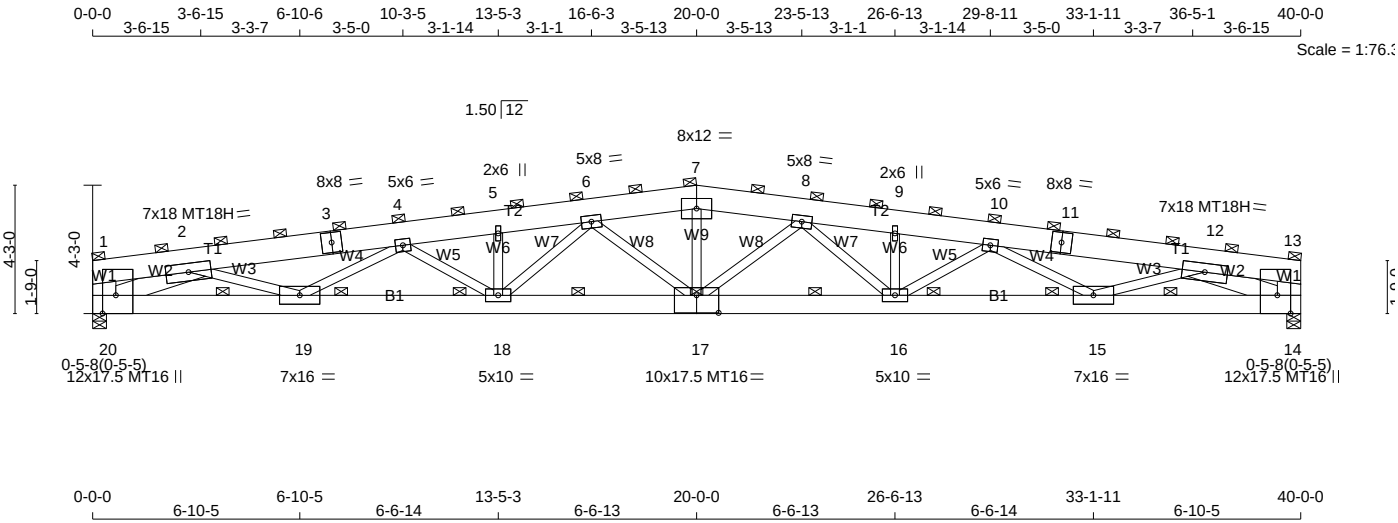

Plate Offsets (X,Y): [12:0-0-0,0-0-0], [14:0-7-4,Edge], [17:0-8-12,0-7-0], [20:0-7-4,Edge]

LOADING (psf)		**SPACING**	4-0-0	**CSI**		**DEFL**	in	(loc)	l/defl	L/d	**PLATES**	**GRIP**
TCLL	20.0	Plates Increase	1.15	TC	0.92	Vert(LL)	-1.08	17	>436	240	MT20	197/144
TCDL	10.0	Lumber Increase	1.15	BC	0.99	Vert(TL)	-1.49	17	>316	180	MT18H	197/144
BCLL	0.0	Rep Stress Incr	NO	WB	0.91	Horz(TL)	0.37	14	n/a	n/a	MT16	116/127
BCDL	5.0	Code IBC2003/TPI2002		(Matrix)							Weight: 356 lb	

LUMBER
TC 2 X 10 SYP 2250F 1.9E
BC 2 X 8 SYP 2400F 2.0E
W5 2 X 4 SPF Stud, W6 2 X 4 SPF Stud, W7 2 X 4 SPF No.1 or SPF No.2
W9 2 X 4 SPF Stud, W7 2 X 4 SPF No.1 or SPF No.2, W6 2 X 4 SPF Stud
W5 2 X 4 SPF Stud, W1 2 X 10 SYP 2250F 1.9E, W2 2 X 8 SYP 2400F 2.0E
WB 2 X 4 SPF 1650F 1.5E *Except* W1 2 X 10 SYP 2250F 1.9E, W2 2 X 8 SYP 2400F 2.0E

BRACING
TOP CHORD 2-0-0 oc purlins (2-3-5 max.), except end verticals.
BOT CHORD 4-0-0 oc bracing.
JOINTS 1 Brace at Jt(s): 7, 1, 13

REACTIONS (lb/size) 20=5856/0-5-8, 14=5856/0-5-8
Max Horz 20=57(LC 8)
Max Uplift 20=-1411(LC 8), 14=-1411(LC 9)
Max Grav 20=6441(LC 3), 14=6441(LC 4)

FORCES (lb) - Max. Comp./Max. Ten. - All forces 250 (lb) or less except when shown.
TOP CHORD 1-2=-2024/440, 2-3=-15948/3647, 3-4=-15711/3650, 4-5=-18398/4330, 5-6=-18385/4362, 6-7=-16509/3780, 7-8=-16509/3780, 8-9=-18385/4362, 9-10=-18398/4330, 10-11=-15713/3652, 11-12=-15949/3649, 12-13=-2022/440, 1-20=-1159/255, 13-14=-1157/253
BOT CHORD 19-20=-2575/11393, 18-19=-4254/18201, 17-18=-3906/17420, 16-17=-3849/17420, 15-16=-4198/18201, 14-15=-2520/11390
WEBS 2-19=-1022/5125, 4-19=-3444/882, 4-18=-1165/1434, 5-18=-912/230, 6-18=-626/2412, 6-17=-3300/1089, 7-17=-437/2105, 8-17=-3300/1089, 8-16=-625/2412, 9-16=-912/228, 10-16=-1164/1434, 10-15=-3442/881, 12-15=-1021/5129, 2-20=-10745/2463, 12-14=-10744/2466

Continued on page 2

NOTES (11)
1) Unbalanced roof live loads have been considered for this design.
2) Wind: ASCE 7-02; 90mph; h=17ft; TCDL=2.4psf; BCDL=3.0psf; Category II; Exp C; partially; MWFRS (low-rise) gable end zone; cantilever left and right exposed ; end vertical left and right exposed; Lumber DOL=1.33 plate grip DOL=1.33.
3) TCLL: ASCE 7-02; Pr=20.0 psf (roof live load: Lumber DOL=1.15 Plate DOL=1.15); Pg=71.0 psf (ground snow); Ps=59.6 psf (roof snow: Lumber DOL=1.15 Plate DOL=1.15); Category II; Exp C; Partially Exp.; Ct=1.2; Unobstructed slippery surface
4) Roof design snow load has been reduced to account for slope.
5) Unbalanced snow loads have been considered for this design.
6) This truss has been designed for a 10.0 psf bottom chord live load nonconcurrent with any other live loads.
7) All plates are MT20 plates unless otherwise indicated.
8) Provide mechanical connection (by others) of truss to bearing plate capable of withstanding 1411 lb uplift at joint 20 and 1411 lb uplift at joint 14.
9) This truss is designed in accordance with the 2003 International Building Code section 2306.1 and referenced standard ANSI/TPI 1.
10) Design assumes 4x2 (flat orientation) purlins at oc spacing indicated, fastened to truss TC w/ 2-10d nails.
11) Plate Approval Numbers: ESR-5243, and ESR-1352.

LOAD CASE(S) Standard

Job	Truss	Truss Type	Qty	Ply	
QTR012995	P3	POST FRAME	1	1	Job Reference (optional)

Midwest Manufacturing Truss Plant, Eau Claire, Wi 54703 — 7.030 s Jan 3 2008 MiTek Industries, Inc. Thu Jun 18 12:29:01 2009 Page 1

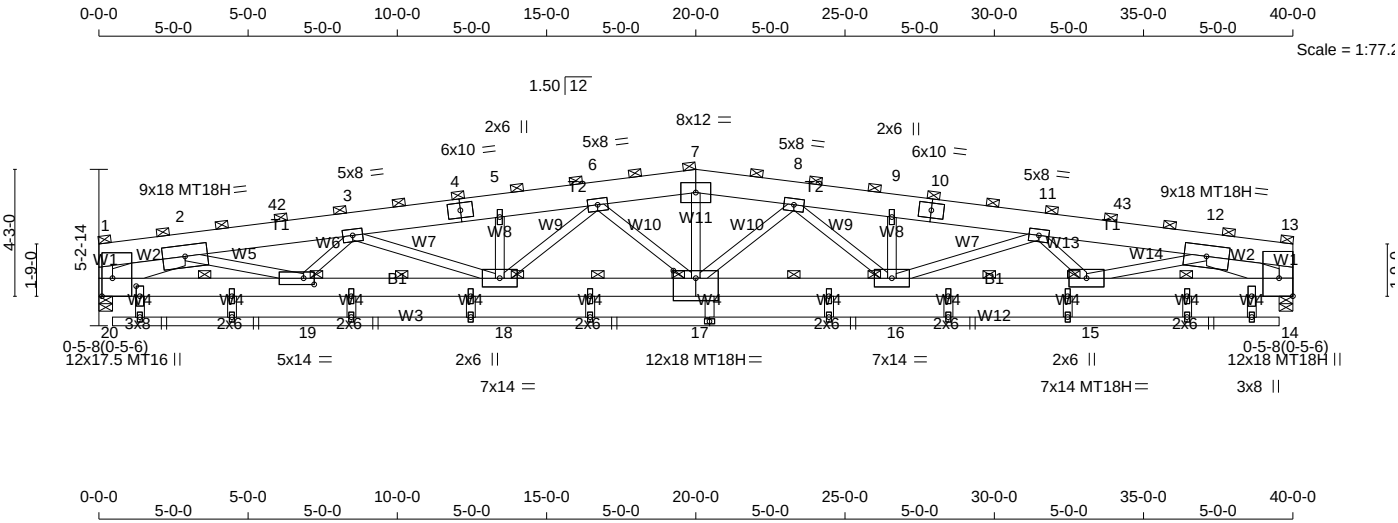

Plate Offsets (X,Y): [14:0-0-0,0-0-0], [14:Edge,0-5-8], [17:0-9-0,0-3-0], [19:0-4-4,0-2-8], [20:0-7-4,Edge], [20:0-4-1,0-1-8]

LOADING (psf)		SPACING	4-0-0	CSI		DEFL	in	(loc)	l/defl	L/d	PLATES	GRIP
TCLL	20.0	Plates Increase	1.15	TC	0.87	Vert(LL)	-1.12	17	>423	240	MT20	197/144
TCDL	10.0	Lumber Increase	1.15	BC	0.98	Vert(TL)	-1.55	17	>306	180	MT18H	197/144
BCLL	0.0	Rep Stress Incr	NO	WB	1.00	Horz(TL)	0.36	14	n/a	n/a	MT16	171/147
BCDL	5.0	Code IBC2003/TPI2002		(Matrix)							Weight: 405 lb	

LUMBER
TC 2 X 10 SYP 2250F 1.9E
BC 2 X 8 SYP 2400F 2.0E
W1 2 X 6 SYP 2400F 2.0E, W1 2 X 6 SYP 2400F 2.0E
W3 2 X 4 SPF No.1 or SPF No.2, W12 2 X 4 SPF No.1 or SPF No.2
W2 2 X 8 SYP 2400F 2.0E, W5 2 X 4 SPF 1650F 1.5E
W9 2 X 4 SPF No.1 or SPF No.2, W10 2 X 4 SPF 1650F 1.5E
W10 2 X 4 SPF 1650F 1.5E, W9 2 X 4 SPF No.1 or SPF No.2
WB 2 X 4 SPF Stud *Except* W14 2 X 4 SPF 2100F 1.8E, W2 2 X 8 SYP 2400F 2.0E

BRACING
TOP CHORD 2-0-0 oc purlins (2-3-15 max.).
BOT CHORD 4-0-0 oc bracing.
JOINTS 1 Brace at Jt(s): 7, 17, 1, 13, 19, 18, 16, 15

REACTIONS (lb/size) 20=5903/0-5-8, 14=5903/0-5-8
Max Horz 20=79(LC 6)
Max Uplift20=-1379(LC 6), 14=-1379(LC 7)
Max Grav 20=6492(LC 3), 14=6492(LC 4)

FORCES (lb) - Max. Comp./Max. Ten. - All forces 250 (lb) or less except when shown.
TOP CHORD 2-42=-16736/3667, 3-42=-16608/3669, 3-4=-18824/4204, 4-5=-18717/4206, 5-6=-18818/4260, 6-7=-16768/3586, 7-8=-16768/3585, 8-9=-18812/4258, 9-10=-18713/4205, 10-11=-18821/4203, 11-43=-16680/3688, 12-43=-16805/3686
BOT CHORD 19-20=-2489/11048, 18-19=-4061/17996, 17-18=-3808/17647, 16-17=-3730/17646, 15-16=-3993/18041, 14-15=-2398/10964
WEBS 7-17=-419/2162, 1-20=-426/101, 13-14=-473/109, 2-20=-12524/2732, 2-19=-1228/6157, 3-19=-2598/678, 5-18=-1734/402, 3-18=-286/2090, 6-18=-666/2831, 6-17=-3277/1084, 8-17=-3277/1084, 9-16=-1711/395, 8-16=-671/2824, 11-16=-338/2050, 11-15=-2602/676, 12-15=-1261/6326, 12-14=-12428/2718

Continued on page 2

NOTES (12)
1) Unbalanced roof live loads have been considered for this design.
2) Wind: ASCE 7-02; 90mph; h=17ft; TCDL=2.4psf; BCDL=3.0psf; Category II; Exp C; partially; MWFRS (low-rise) gable end zone; cantilever left and right exposed ; end vertical left and right exposed; Lumber DOL=1.33 plate grip DOL=1.33.
3) TCLL: ASCE 7-02; Pr=20.0 psf (roof live load: Lumber DOL=1.15 Plate DOL=1.15); Pg=71.0 psf (ground snow); Ps=59.6 psf (roof snow: Lumber DOL=1.15 Plate DOL=1.15); Category II; Exp C; Partially Exp.; Ct=1.2; Unobstructed slippery surface
4) Roof design snow load has been reduced to account for slope.
5) Unbalanced snow loads have been considered for this design.
6) This truss has been designed for a 10.0 psf bottom chord live load nonconcurrent with any other live loads.
7) All plates are MT20 plates unless otherwise indicated.
8) All plates are 2x4 MT20 unless otherwise indicated.
9) Provide mechanical connection (by others) of truss to bearing plate capable of withstanding 1379 lb uplift at joint 20 and 1379 lb uplift at joint 14.
10) This truss is designed in accordance with the 2003 International Building Code section 2306.1 and referenced standard ANSI/TPI 1.
11) Design assumes 4x2 (flat orientation) purlins at oc spacing indicated, fastened to truss TC w/ 2-10d nails.
12) Plate Approval Numbers: ESR-5243, and ESR-1352.

LOAD CASE(S) Standard

WARNING! BCSI-B1 SUMMARY SHEET - GUIDE FOR HANDLING, INSTALLING, RESTRAINING AND BRACING OF TRUSSES (2006 EDITION)

GENERAL NOTES

Trusses are not marked in any way to identify the frequency or location of temporary lateral restraint and diagonal bracing. Follow the recommendations for handling, installing and temporary restraining and bracing of trusses. Refer to BCSI Guide to Good Practice for Handling, Installing, Restraining & Bracing of Metal Plate Connected Wood Trusses for more detailed information.

Truss Design Drawings may specify locations of permanent lateral restraint or reinforcement for individual truss members. Refer to the BCSI-B3 Summary Sheet – Permanent Restraint/Bracing of Chords & Web Members for more information. All other permanent bracing design is the responsibility of the Building Designer.

NOTAS GENERALES

Los trusses no están marcados de ningún modo que identifique la frecuencia o localización de restricción lateral y arriostre diagonal temporales. Use las recomendaciones de manejo, instalación, restricción y arriostre temporal de los trusses. Vea el folleto BCSI Guía de Buena Práctica para el Manejo, Instalación, Restricción y Arriostre de los Trusses de Madera Conectados con Placas de Metal para información más detallada.

Los dibujos de diseño de los trusses pueden especificar las localizaciones de restricción lateral permanente o refuerzo en los miembros individuales del truss. Vea la hoja resumen BCSI-B3 – Restricción/Arriostre Permanente de Cuerdas y Miembros Secundarios para más información. El resto de los diseños de arriostres permanentes son la responsabilidad del Diseñador del Edificio.

The consequences of improper handling, erecting, installing, restraining and bracing can result in a collapse of the structure, or worse, serious personal injury or death.

El resultado de un manejo, levantamiento, instalación, restricción y arrisotre incorrecto puede ser la caída de la estructura o aún peor, heridos o muertos.

Banding and truss plates have sharp edges. Wear gloves when handling and safety glasses when cutting banding.

Empaques y placas de metal tienen bordes afilados. Use guantes y lentes protectores cuando corte los empaques.

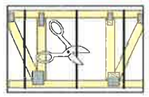

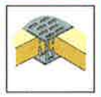

HANDLING — MANEJO

Avoid lateral bending. — Evite la flexión lateral.

Use special care in windy weather or near power lines and airports.

Utilice cuidado especial en días ventosos o cerca de cables eléctricos o de aeropuertos.

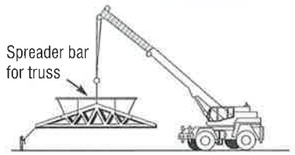

The contractor is responsible for properly receiving, unloading and storing the trusses at the jobsite.

El contratista tiene la responsabilidad de recibir, descargar y almacenar adecuadamente los trusses en la obra.

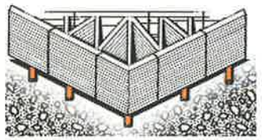

If trusses are to be stored horizontally, place blocking of sufficient height beneath the stack of trusses at 8' to 10' on center.

For trusses stored for more than one week, cover bundles to prevent moisture gain but allow for ventilation.

Refer to BCSI Guide to Good Practice for Handling, Installing, Restraining & Bracing of Metal Plate Connected Wood Trusses for more detailed information pertaining to handling and jobsite storage of trusses.

Si los trusses estarán guardados horizontalmente, ponga bloqueando de altura suficiente detrás de la pila de los trusses.

Para trusses guardados por más de una semana, cubra los paquetes para prevenir aumento de humedad pero permita ventilación.

Vea el folleto BCSI Guía de Buena Práctica para el Manejo, Instalación, Restricción y Arriostres de los Trusses de Madera Conectados con Placas de Metal para información más detallada sobre el manejo y almacenado de los trusses en área de trabajo.

Use proper rigging and hoisting equipment.

Use equipo apropiado para levantar e improvisar.

Do not store unbraced bundles upright.

No almacene verticalmente los trusses sueltos.

Do not store on uneven ground.

No almacene en tierra desigual.

HOISTING RECOMMENDATIONS FOR TRUSS BUNDLES
RECOMENDACIONES PARA LEVANTAR PAQUETES DE TRUSSES.

Warning! Don't overload the crane.
¡Advertencia! ¡No sobrecarga la grúa!

Never use banding alone to lift a bundle.
Do not lift a group of individually banded bundles.

Nunca use sólo los empaques para levantar un paquete.
No levante un grupo de empaques individuales.

A single lift point may be used for bundles with trusses up to 45'.
Two lift points may be used for bundles with trusses up to 60'.
Use at least 3 lift points for bundles with trusses greater than 60'.

Puede usar un solo lugar de levantar para paquetes de trusses hasta 45 pies.
Puede usar dos puntos de levantar para paquetes más de 60 pies.
Use por lo menos tres puntos de levantar para paquetes más de 60 pies.

Warning! Do not over load supporting structure with truss bundle.

¡Advertencia! No sobrecargue la estructura apoyada con el paquete de trusses.

Place truss bundles in stable position.
Puse paquetes de trusses en una posición estable.

INSTALLATION OF SINGLE TRUSSES BY HAND
INSTALACIÓN POR LA MANO DE TRUSSES INDIVIDUALES

Trusses 20' or less, support at peak.

Levante del pico los trusses de 20 pies o menos.

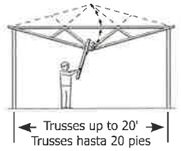

Trusses 30' or less, support at quarter points.

Levante de los cuartos de tramo los trusses de 30 pies o menos.

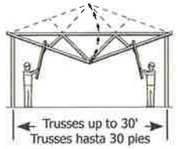

HOISTING OF SINGLE TRUSSES — LEVANTAMIENTO DE TRUSSES INDIVIDUALES

Hold each truss in position with the erection equipment until top chord temporary lateral restraint is installed and the truss is fastened to the bearing points.

Sostenga cada truss en posición con equipo de grúa hasta que la restricción lateral temporal de la cuerda superior esté instalado y el truss está asegurado en los soportes.

Warning! Using a single pick-point at the peak can damage the truss.

¡Advertencia! El uso de un solo lugar para levantar en el pico puede hacer daño al truss.

HOISTING RECOMMENDATIONS FOR SINGLE TRUSSES
RECOMENDACIONES PARA LEVANTAR TRUSSES INDIVIDUALES

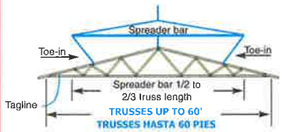

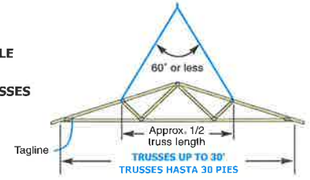

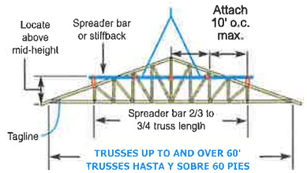

TEMPORARY RESTRAINT & BRACING
RESTRICCIÓN Y ARRIOSTRE TEMPORAL

Refer to BCSI-B2 Summary Sheet – Truss Installation & Temporary Restraint/Bracing for more information.

Vea el resumen BCSI B2 – Restricción/ Arriostre Temporal y Instalación de los Trusses para más información.

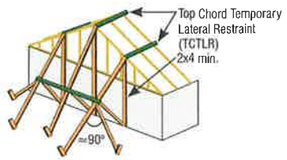

Locate ground braces for first truss directly in line with all rows of top chord temporary lateral restraint (see table in the next column).

Coloque los arriostres de tierra para el primer truss directamente en línea con cada una de las filas de restricción lateral temporal de la cuerda superior (vea la table en la próxima columna).

Do not walk on unbraced trusses.

No camine en trusses sueltos.

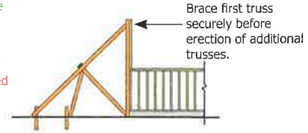

STEPS TO SETTING TRUSSES
LAS MEDIDAS DE LA INSTALLACIÓN DE LOS TRUSSES

1) Install ground bracing. 2) Set first truss and attach securely to ground bracing. 3) Set next 4 trusses with short member temporary lateral restraint (see below). 4) Install top chord diagonal bracing (see below). 5) Install web member plane diagonal bracing to stabilize the first five trusses (see below). 6) Install bottom chord temporary lateral restraint and diagonal bracing (see below). 7) Repeat process on groups of four trusses until all trusses are set.

1) Instale los arriostres de tierra. 2) Instale el primero truss y ate seguramente al arriostre de tierra. 3) Instale los próximos cuatro trusses con restricción lateral temporal de miembro corto (vea abajo). 4) Instale el arriostre diagonal de la cuerda superior (vea abajo). 5) Instale arriostre diagonal para los planos de los miembros secundarios para estable los primeros cinco trusses (vea abajo). 6) Instale la restricción lateral temporal y arriostre diagonal para la cuerda inferior (vea abajo). 7) Repita éste procedimiento en grupos de cuatro trusses hasta que todos los trusses estén instalados.

Refer to BCSI-B2 Summary Sheet – Truss Installation & Temporary Restraint/Bracing for more information.

Vea el resúmen BCSI-B2 - Instalación de Trusses y Arriostre Temporal para mayor información.

RESTRAINT/BRACING FOR ALL PLANES OF TRUSSES
EL RESTRICCIÓN/ARRIOSTRE EN TODOS PLANOS DE TRUSSES.

This restraint & bracing method is for all trusses except 3x2 and 4x2 parallel chord trusses.

Este método de restricción y arriostre es para todo trusses excepto trusses de cuerdas paralelas 3x2 y 4x2.

1) TOP CHORD — CUERDA SUPERIOR

Truss Span Longitud de Tramo	Top Chord Temporary Lateral Restraint (TCTLR) Spacing Espaciamiento del Arriostre Temporal de la Cuerda Superior
Up to 30' Hasta 30 pies	10' o.c. max. 10 pies máximo
30' to 45' 30 a 45 pies	8' o.c. max. 8 pies máximo
45' to 60' 45 a 60 pies	6' o.c. max. 6 pies máximo
60' to 80'* 60 a 80 pies*	4' o.c. max. 4 pies máximo

*Consult a Professional Engineer for trusses longer than 60'.
*Consulte a un ingeniero para trusses de mas de 60 pies.

See BCSI-B2 for TCTLR options.
Vea el BCSI-B2 para las opciones de TCTLR.

Refer to BCSI-B3 Summary Sheet – Permanent Restraint/Bracing of Chords & Web Members for Gable End Frame restraint/bracing/ reinforcement information.

Para información sobre restricción/arriostre/refuerzo para armazón de hastial vea el resumen BCSI-B3 – Restricción/Arriostre Permanente de Cuerdas y Miembros Secundarios.

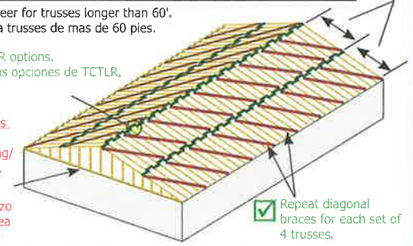

Ground bracing not shown for clarity.

Repeat diagonal braces for each set of 4 trusses.

Repita los arrisotres diagonales para cada grupo de 4 trusses.

2) WEB MEMBER PLANE — PLANO DE LOS MIEMBROS SECUNDARIOS

LATERAL RESTRAINT & DIAGONAL BRACING ARE VERY IMPORTANT
¡LA RESTRICCIÓN LATERAL Y EL ARRIOSTRE DIAGONAL SON MUY IMPORTANTES!

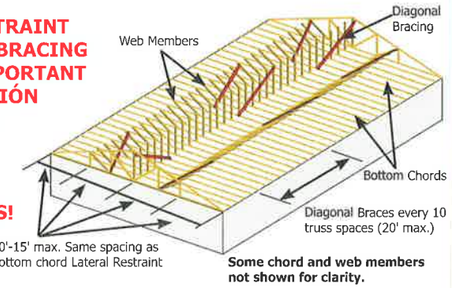

Some chord and web members not shown for clarity.

3) BOTTOM CHORD — CUERDA INFERIOR

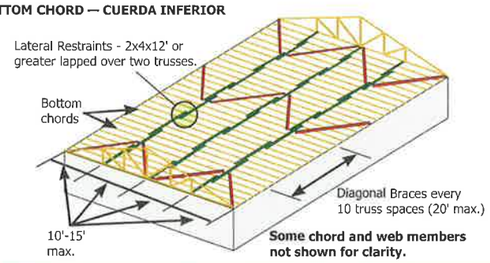

Some chord and web members not shown for clarity.

RESTRAINT & BRACING FOR 3x2 AND 4x2 PARALLEL CHORD TRUSSES
LA RESTRICCIÓN Y EL ARRIOSTRE PARA TRUSSES DE CUERDAS PARALELAS 3X2 Y 4X2

Refer to BCSI-B7 Summary Sheet - Temporary & Permanent Restraint/ Bracing for Parallel Chord Trusses for more information.

Vea el resumen BCSI-B7 – Restricción y Arriostre Temporal y Permanente de Trusses de Cuerdas Paralelas para más información.

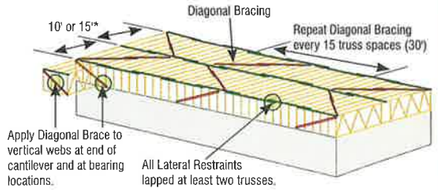

*Top chord Temporary Lateral Restraint spacing shall be 10' o.c. max. for 3x2 chords and 15' o.c. for 4x2 chords.

INSTALLING — INSTALACION

Tolerances for Out-of-Plane.
Tolerancias para Fuera-de-Plano.

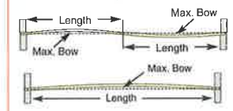

Out of Plumb	
D/50	D (ft.)
1/4"	1'
1/2"	2'
3/4"	3'
1"	4'
1-1/4"	5'
1-1/2"	6'
1-3/4"	7'
2"	≥8'

Out of Plane	
Max. Bow	Truss Length
3/4"	12.5'
7/8"	14.6'
1"	16.7'
1-1/8"	18.8'
1-1/4"	20.8'
1-3/8"	22.9'
1-1/2"	25.0'
1-3/4"	29.2'
2"	≥33.3'

Tolerances for Out-of-Plumb.
Tolerancias para Fuera-de-Plomada.

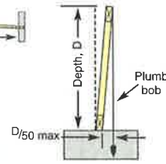

CONSTRUCTION LOADING — CARGA DE CONSTRUCCION

Do not proceed with construction until all lateral restraint and bracing is securely and properly in place.

No proceda con la construcción hasta que todas las restricciones laterales y los arriostres estén colocados en forma apropiada y segura.

Do not exceed maximum stack heights. Refer to BCSI-B4 Summary Sheet - Construction Loading for more information.

No exceda las máximas alturas recomendadas. Vea el resúmen BCSI-B4 Carga de Construcción para mayor información.

Maximum Stack Height for Material on Trusses	
Material	Height
Gypsum Board	12"
Plywood or OSB	16"
Asphalt Shingles	2 bundles
Concrete Block	8"
Clay Tile	3-4 tiles high

Do not overload small groups or single trusses.
No sobrecargue pequeños grupos o trusses individuales.

Never stack materials near a peak.
Nunca amontone material cerca del pico.

Place loads over as many trusses as possible.
Coloque las cargas sobre tantos trusses como sea posible.

Position loads over load bearing walls.
Coloque las cargas sobre las paredes soportantes.

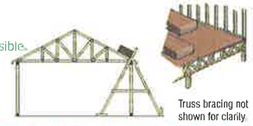

ALTERATIONS — ALTERACIONES

Refer to BCSI-B5 Summary Sheet - Truss Damage, Jobsite Modifications & Installation Errors.

Vea el resúmen BCSI-B5 Daños de trusses, Modificaciones en la Obra y Errores de Instalación.

Do not cut, alter, or drill any structural member of a truss unless specifically permitted by the Truss Design Drawing.

No corte, altere o perfore ningún miembro estructural de los trusses, a menos que esté específicamente permitido en el dibujo del diseño del truss.

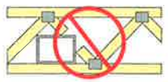

Trusses that have been overloaded during construction or altered without the Truss Manufacturer's prior approval may render the Truss Manufacturer's limited warranty null and void.

Trusses que se han sobrecargado durante la construcción o han sido alterados sin una autorización previa del Fabricante de Trusses, pueden reducir o eliminar la garantía del Fabricante de Trusses.

NOTE: The Truss Manufacturer and Truss Designer rely on the presumption that the Contractor and crane operator (if applicable) are professionals with the capability to undertake the work they have agreed to do on any given project. If the Contractor believes it needs assistance in some aspect of the construction project, it should seek assistance from a competent party. The methods and procedures outlined in this document are intended to ensure that the overall construction techniques employed will put the trusses into place SAFELY. These recommendations for handling, installing, restraining and bracing trusses are based upon the collective experience of leading personnel involved with truss design, manufacture and installation, but must, due to the nature of responsibilities involved, be presented only as a GUIDE for use by a qualified Building Designer or Contractor. It is not intended that these recommendations be interpreted as superior to the Building Designer's design specification for handling, installing, restraining and bracing trusses and it does not preclude the use of other equivalent methods for restraining/bracing and providing stability for the walls, columns, floors, roofs and all the interrelated structural building components as determined by the Contractor. Thus, WTCA and TPI expressly disclaim any responsibility for damages arising from the use, application, or reliance on the recommendations and information contained herein.

WTCA REPRESENTING THE STRUCTURAL BUILDING COMPONENTS INDUSTRY
6300 Enterprise Lane • Madison, WI 53719
608/274-4849 • www.sbcindustry.com

TRUSS PLATE INSTITUTE
218 N. Lee St., Ste. 312 • Alexandria, VA 22314
703/683-1010 • www.tpinst.org

B1WARN11x17 20061115

This document summarizes the information provided in Section B1 of the 2006 Edition of Building Component Safety Information BCSI - Guide to Good Practice for Handling, Installing, Restraining & Bracing of Metal Plate Connected Wood Trusses.
Copyright © 2004-2006 WTCA – Representing the Structural Building Components Industry and Truss Plate Institute. All Rights Reserved. This guide or any part thereof may not be reproduced in any form without the written permission of the publishers. Printed in the United States of America.

¡ADVERTENCIA! HOJA RESUMEN DE LA GUÍA DE BUENA PRÁCTICA PARA EL MANEJO, INSTALACIÓN, RESTRICCIÓN Y ARRIOSTRE DE LOS TRUSSES (2006 EDICIÓN)

B10 Post Frame Truss Installation, Restraint & Bracing
Instalación, Restricción y Arriostre de Armazón de Poste

COMMENTARY AND RECOMMENDATIONS

For trusses spaced greater than 2'-0" on-center and up to 81'-0" in length

COMENTARIO Y RECOMMENDACIONES

Para los trusses espaciados más de 2 pies en el centro y hasta 81 pies de largo

See **BCSI-B1***** for additional information on truss unloading, jobsite handling, jobsite storage, hoisting and lifting. Heed all warnings and caution notes.

*Vea **BCSI-B1***** para más información sobre como descargar, manejar en la obra, almacenar en la obra, y levantar los trusses. Presta atención a todas las advertencias.*

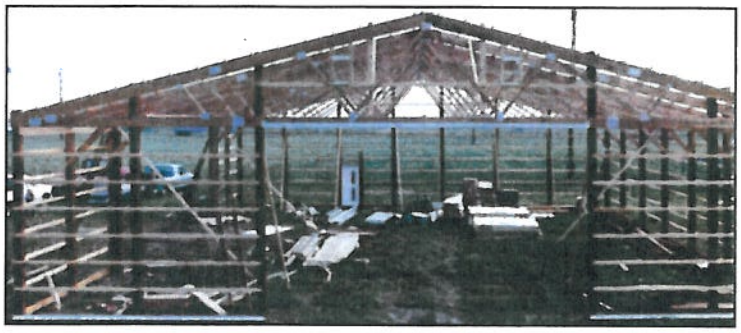

WARNING! Trusses with clear spans 60 feet or greater are extremely dangerous to install and require more detailed safety and handling measures than shorter span trusses. Hire a registered design professional to provide a restraint/bracing plan and to supervise the erection process.

¡ADVERTENCIA! *Trusses de 60 pies o más de largo son muy peligrosos para instalar y requieren las prácticas de seguridad y tratamiento más detalladas que los trusses más cortos de largo. Contrata un profesional registrado de diseño para proveer un plan de restricción/arriostre y para supervisar el proceso de construcción.*

TRUSS STORAGE – *ALMACENAJE DE TRUSSES*

DO NOT unload trusses on rough terrain or uneven surfaces that could cause damage to the truss.

NO *descargar trusses en terreno escabroso o superficies irregulares que pueden causar daño al truss.*

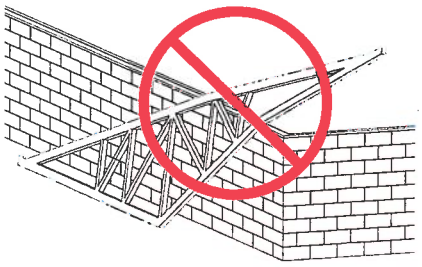

Walking on trusses that are lying flat is extremely dangerous and is strictly prohibited.

Caminar arriba de trusses que están acostados planos es extremamente peligroso y es estrictamente prohibido.

Trusses may be unloaded directly on the ground at the time of delivery or stored temporarily in contact with the ground after delivery. If trusses are to be stored horizontally for more than one week, place blocking of sufficient height beneath the stack of trusses on 8' to 10' intervals (or as required) to minimize lateral bending and to lessen moisture gain from the ground.

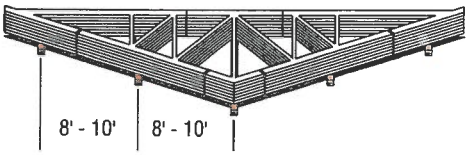

Los trusses pueden ser descargados directamente en el terreno al tiempo de la entrega o almacenados temporalmente en contacto con el terreno después de la entrega. Si los trusses tienen que ser almacenados horizontalmente por más de una semana, ponga bloqueo de la altura suficiente debajo el montón de trusses en intervalos de 8 hasta 10 pies (o como sea requerido) para minimizar el doblado lateral y reducir la cantidad de agua que absorben el terreno.

Trusses stored for more than one week shall be protected from the environment in a manner that provides adequate ventilation of the trusses. If tarpaulins or other protective covers are used, the ends must be left open for ventilation. Tight fitting covers are not recommended, since they trap moisture.

Trusses que están almacenados por más de una semana serán protegidos del ambiente en una manera que provee la ventilación adecuada de los trusses. Si unas lonas o otras cubiertas protectivas están utilizadas, los extremos tienen que quedar abiertos para la ventilación. Las cubiertas apretadas no son recomendadas, porque atrapan la humedad.

Always wear gloves and safety glasses when cutting and/or handling banding.

Siempre use guantes y lentes de seguridad cuando está cortando y/o manejando las tiras de los trusses.

DO NOT store bundles upright (vertical) unless properly braced to prevent toppling.

NO *guardar los paquetes derechos (verticales) a menos que estén arriostrados apropiadamente para prevenir que se caigan.*

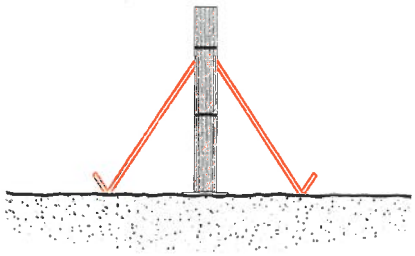

B10PostFrame 090902

WARNINGS AND RESPONSIBILITIES
ADVERTENCIAS Y RESPONSABILIDADES

DISCLAIMER: The methods and procedures outlined in this document are intended to ensure that the overall construction techniques employed will put the trusses into place SAFELY. These recommendations for handling, installing, restraining and bracing trusses are based upon the collective experience of leading personnel involved with truss design, manufacture and installation, but must, due to the nature of responsibilities involved, be presented only as a GUIDE for use by a qualified building designer or contractor. It is not intended that these recommendations be interpreted as superior to the building designer's design specification for handling, installing, restraining and bracing trusses and it does not preclude the use of other equivalent methods for restraining/bracing and providing stability for the walls, columns, floors, roofs and all the interrelated structural building components as determined by the contractor. Thus, WTCA and TPI expressly disclaim any responsibility for damages arising from the use, application, or reliance on the recommendations and information contained herein.

RENUNCIA DE RESPONSABILIDAD: *Los métodos y procedimientos cuales son resumidos en este documento tienen la intención de asegurar que las técnicas de construcción utilizadas pondrán los trusses en sus sitios SIN INCIDENTES. Estas recomendaciones para el manejo, instalación, restricción y arriostre de trusses son basados en la experiencia colectiva de personal destacado involucrado en el diseño, fabricación y instalación de trusses, pero tiene que, debido a la naturaleza de las responsabilidades involucradas, se presente solamente como una GUÍA para el uso de un diseñador de edificio o contratista cualificado. Estas recomendaciones no tienen la intención de interpretar como mejor que las especificaciones del diseñador del edificio para el diseño del manejo, instalación, restricción y arriostre de trusses y no descarta el uso de otros métodos equivalentes para restricción/arriostre y provisión de estabilidad para los paredes, columnas, pisos, techos y todos los componentes interrelacionados con la estructura del edificio como decidido por el contratista. Puesto, WTCA y TPI renuncian expresamente alguna responsabilidad para daños que puedan surgir por el uso, aplicación o confianza en las recomendaciones e información contenido aquí.*

IMPORTANT NOTES ON LIMITATIONS OF RECOMMENDATIONS
NOTAS IMPORTANTES ON LIMITACIONES DE RECOMENDACIONES

☑ The recommendations and guidelines presented in this document are intended primarily for post frame buildings using trusses with the following characteristics:

Las recomendaciones y pautas presentadas en este documento son propuestas para los edificios de armazón de poste utilizando trusses con las siguientes características:

1. Trusses are used in an engineered building system.

   Los trusses se usan en un sistema de edificio ingenierado.

2. Columns (laminated columns, posts) are embedded in the ground or attached to a foundation using the method specified by the building designer.

   Columnas (columnas laminadas, postes) están clavados en el terreno o agregados a una fundación usando el método especificado por el diseñador del edificio.

3. For gable style roofs, the end-walls shall have columns that extend to the top chord of the gable end truss with adequate contact between the top chord and column for a structural connection. The gable end trusses are stabilized against rollover by connecting the top and bottom chords to the end-wall columns or engineered bracing system.

   Para los techos de estilo hastial, las paredes de extremo deben tener columnas que extienden a la parte más alta de cuerda del truss hastial con contacto adecuado entre la cuerda de arriba y la columna para una conexión estructural. Los trusses hastiales son establecidos contra el girando por juntar las cuerdas superiores y anteriores a las columnas de las paredes de extremo o un sistema de arriostre fabricado.

4. Side-wall columns extend above the mid-height of the truss heel at the connection of the column and the truss.

   Columnas de paredes-de-lado extienden sobre la media-altura del talón de truss en la conexión de la columna y el truss.

5. Truss heels are connected to columns or headers (i.e. beams, girders) to resist rollover at the heel.

   Talónes de truss están conectados a las columnas o cabezeros (vigas, travesaños) para resistir movimiento en el talón.

6. Trusses have flat bottom chords and are spaced 4' to 12' on-center.

   Trusses tienen cuerdas inferiores planas y están espaciados 4 a 12 pies en el centro.

7. Purlins are attached directly to the top chord.

   Las vigas de soporte (purlins) están agregadas directamente a la cuerda superior.

NOTICE The information presented in this document that is specific to handling, installation, restraint and bracing of trusses is applicable to truss applications in which the trusses are spaced >2' to 12' on-center.

La información presentada en este documento que es específico al manejo, instalación, restricción, y arriostre de trusses es pertinente a los aplicaciones de trusses en cuales los trusses están espaciados más de 2 a 12 pies en centro.

MECHANICAL INSTALLATION
INSTALACIÓN MECÁNICA

⚠ **WARNING!** Until the building is completely erected in accordance with the construction documents, the trusses are unstable and present a safety hazard. Truss instability increases with increasing building width, height and length.

¡ADVERTENCIA! *Hasta que el edificio está completamente construido según los documentos de construcción, los trusses están inestables y son un peligro de seguridad. La inestabilidad de trusses aumenta con la aumentación de la anchura, altura y longitud del edificio.*

NOTICE Do not lift bundled trusses by the banding.

No levantar bultos de trusses por las tiras.

⚠ **CAUTION!** Do not exceed header capacity when placing bundles of trusses as this can result in overstressing of the header, post and/or header-to-post connection.

CAUTELA! *No sobrepasar la capacidad de las vigas que cruzan cuando se pone paquetes de trusses porque puede resultar en demasiada tensión de la viga, el poste y/o la conexión de viga-a-poste.*

NOTICE Do not attach cables, chains, or hooks to the web members.

No amarre cables, cadenas o ganchos a los miembros secundarios.

NOTICE Using a single pick-point at the peak can damage the truss.

El uso de un solo lugar en el pico para levantar puede hacer daño al truss.

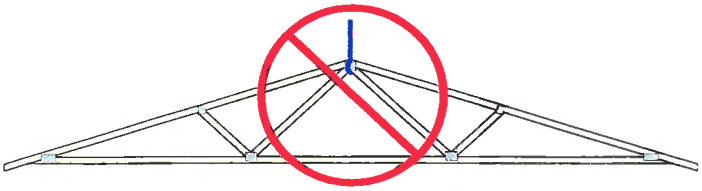

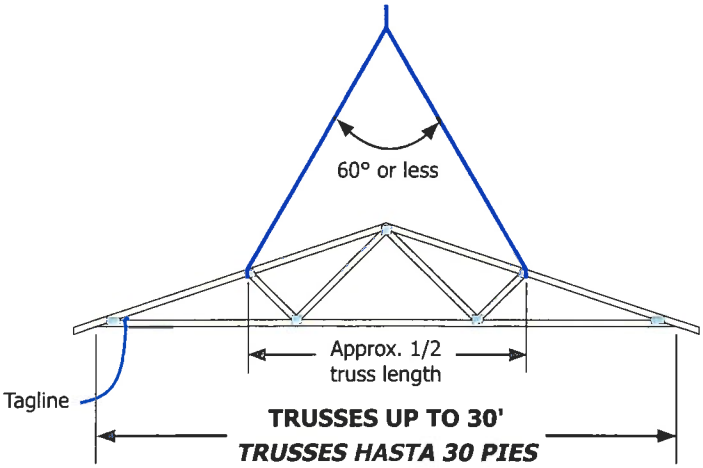

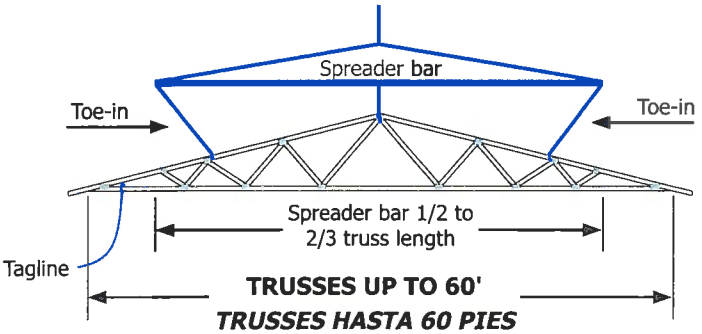

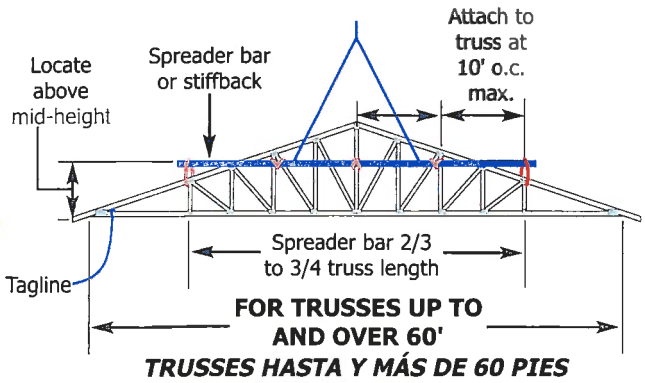

NOTICE Connect lifting devices to the truss top chord (or stiff-back as applicable) with a closed-loop attachment utilizing materials such as slings, chains, cables, or nylon strapping of sufficient strength to carry the weight of the truss. Set each truss in proper position per the building designer's framing plan and hold with the lifting device until the ends of the truss are securely fastened and all temporary installation restraint/bracing is installed.

Junte aparatos de levantar a la cuerda superior del truss (o "stiffback" como pertinente) con un dispositivo de lazo-cerrado utilizando materiales como hondas, cadenas, cables, o correa de nylon de fuerza suficiente para cargar el peso del truss. Ponga cada truss en la posición apropiada por el plan de armazón del diseñador del edificio y sujetar con el aparato de levantar hasta que los extremos de los trusses estén sujetos bien y todas las restricciones/arriostres de instalación temporal estén instaladas.

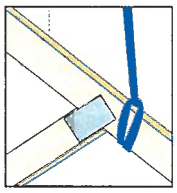

TEMPORARY INSTALLATION RESTRAINT/ BRACING PRINCIPLES

PRINCIPIOS DE RESTRICCIÓN/ARRIOSTRE DE INSTALACIÓN TEMPORAL

Use the following chronological steps to provide temporary installation restraint/bracing for truss installation.

Use los siguientes pasos cronológicos para proveer restricción/ arriostre temporal para la instalación de trusses.

STEP 1: ENSURE STABLE SIDE-WALL AND END-WALL COLUMNS

ASEGURE COLUMNAS ESTABLES DE PARED DE LADO Y PARED DE EXTREMO

1.1 a) Embedded columns shall be backfilled with concrete or compacted fill.

Columnas incrustadas deben ser llenadas de atrás con concreto u llenado sólido.

b) Columns bearing on a concrete foundation shall be attached to prevent horizontal movement of column base as specified by the building designer in the construction documents (Figure A).

Columnas montadas arriba de una fundación de concreto debe ser sujetadas para prevenir movimiento hori zontal de la base de la columna como sea especificado por el diseñador del edificio en los documentos de construcción (Figura A).

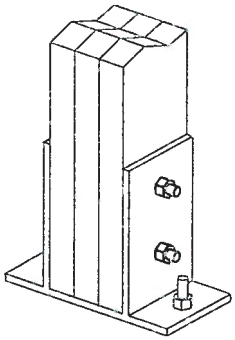

Figure A: Column Connection to Concrete Foundation

Figura A: Conección de Columna a Fundación de Concreto

1.2 Attach girts, splash board or temporary lateral restraint, and install a system of temporary diagonal ground bracing to provide support in the plane of the wall (Figure B) and perpendicular to it (Figure C).

Sujete girts, tabla salpicadura o restricción lateral temporal, y instale un sistema de arriostre diagonal de terreno para proveer apoyo en el plano de la pared (Figura B) y perpendicular a la pared (Figura C).

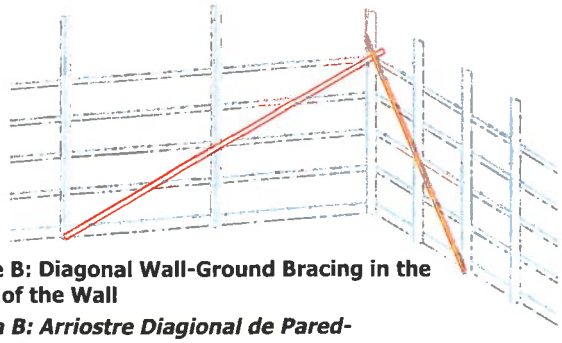

Figure B: Diagonal Wall-Ground Bracing in the Plane of the Wall

Figura B: Arriostre Diagional de Pared-Terrenoen el Plano de la Pared

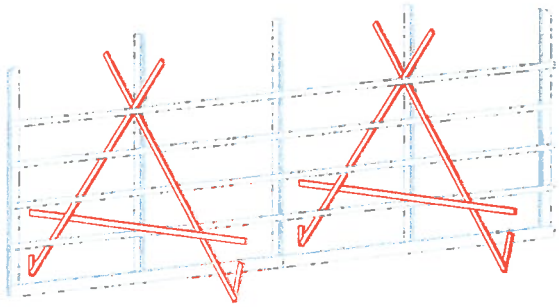

Figure C: A-Frame Ground Bracing Perpendicular to the Wall

Figura C: Arriostre de Terreno de Armazón-A Per pendicular a la Pared

STEP 2: PROVIDE A STABLE BASE UNIT UPON WHICH TO BUILD
PROVEE UNA UNIDAD ESTABLE DE BASE SOBRE CUAL SE PUEDE CONSTRUIR

2.1 Install trusses on side wall columns and header system in sufficient quantities (usually 16' - 24' of sidewall) to establish a stable base unit. See Sections 3.1, 3.2, 3.3 for restraint/bracing requirements.

Instale trusses en columnas de pared de lado y sistema de cabezera en cantidades suficientes (usualmente 16 pies-24 pies de la pared de lado) para establecer una unidad de base estable. Vea secciónes 3.1, 3.2, 3.3 para requisitos de restricción/arriostre.

2.2 Resist movement of the base unit parallel to the end-wall with,

Resistir movimiento de la unidad de base paralelo a la pared de extremo.

a) Diagonal braces (Figure D), and/or

Arriostres diagonales (Figura D) y/o

b) Chains or cables (Figure E) together with turnbuckles, or come-alongs of sufficient strength (min. 2000 lbs. capacity).

Cadenas o cables (Figura E) juntos con turnbuckles o come- alongs de suficiente fuerza (min. capacidad de 2000 libras).

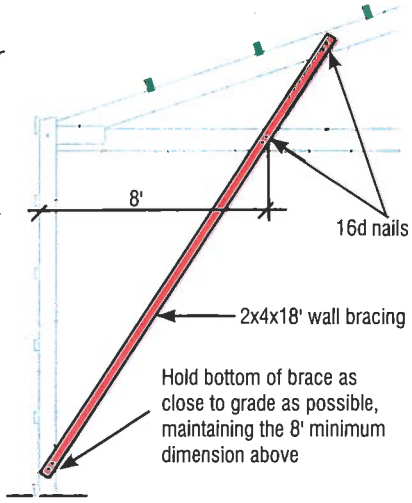

Figure D: Column-Truss Bracing

Figura D: Arriostre de Columna-a-Truss

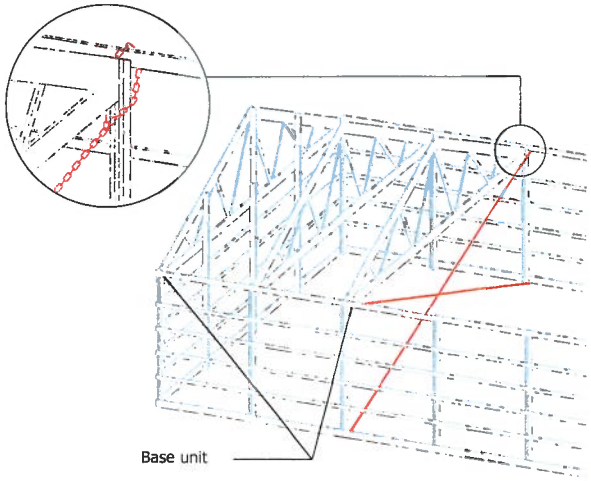

Note: Purlins, truss web restraint/bracing & some nailers omitted for clarity. See Step 3 for temporary restraint & bracing requirements for the trusses.

Figure E: Column Chaining

Figura E: Columnas Encadenadas

2.3 Resist movement of the base unit perpendicular to the end-wall with,

Resistir movimiento de la unidad de base perpendicular a la pared de extremo con,

a) Temporary ground bracing (Figure B and C) and/or

Arriostre temporal diagonal de terreno (Figura B y C) y/o

b) Chains or cables (Figure F) together with turnbuckles, or come-alongs of sufficient strength (min. 2000 lbs. capacity).

Cadenas o cables (Figura F) juntos con turnbuckles o come-alongs de suficiente fuerza (min. capacidad de 2000 libras).

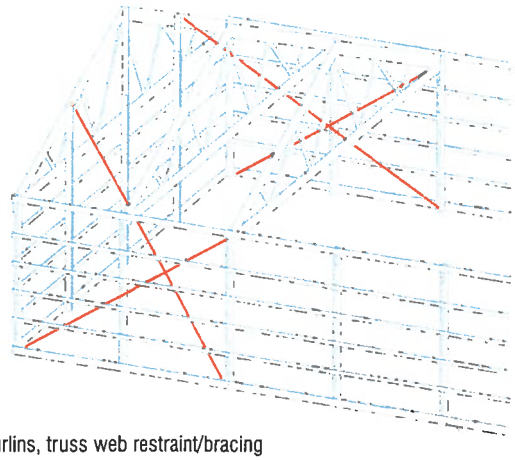

Note: Purlins, truss web restraint/bracing & some nailers omitted for clarity. See Step 3 for temporary restraint & bracing requirements for the trusses.

Figure F: Chaining Perpendicular to End Wall

Figura F: Encadenado Perpendicular a la Pared de Extremo

NOTICE The Ground bracing concepts provided in **BCSI-B2***** can also be used with roof trusses spaced greater than 2' on-center.

Los conceptos de arriostre de terreno provistos en BCSI-B2 también pueden ser usados con trusses de techo espaciados más de 2 pies en centro.

STEP 3: TEMPORARY RESTRAINT/BRACING OF THE TRUSS BASE UNIT

RESTRICCIÓN/ARRIOSTRE TEMPORAL DE LA UNIDAD DE LA BASE DEL TRUSS

3.1 Provide a mechanical connection to resist truss rollover at the heel (Figure G). This includes the use of nails, bolts, lag screws, metal straps or connectors.

Provee una conexión mecánica para resistir movimiento de los trusses en el talón (Figura G). Esto incluye el uso de clavos, tornillos, tiras de metal, o conectores.

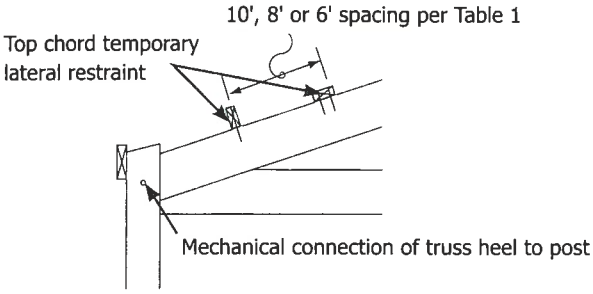

Figure G: Mechanical Connection at Heel and Top Chord Temporary Lateral Restraint

Figura G: Conexión Mecánica en Talón y Restricción Lateral de la Cuerda Superior

3.2 Install top chord temporary lateral restraint at spacing indicated in Table 1 and as shown in Figures G and H.

Instale restricción lateral temporal a las cuerdas superiores de los trusses como se indique en la Tabla 1 y mostrado en Figuras G y H.

IMPORTANT NOTE: Use a minimum of 2-16d (0.135x3.5") nails or equivalent for temporary restraint and bracing connections, unless otherwise specified by the building designer.

NOTA IMPORTANTE: *Utilice un mínimo de 2-16d (0.135x3.5") clavos o el equivalente para conexiones de restricción y arriostre temporal, a menos que especifique por lo demás el diseñador del edificio.*

Note: Purlins installed in accordance with the construction documents prepared by the building designer can also serve the function of top chord temporary lateral restraint.

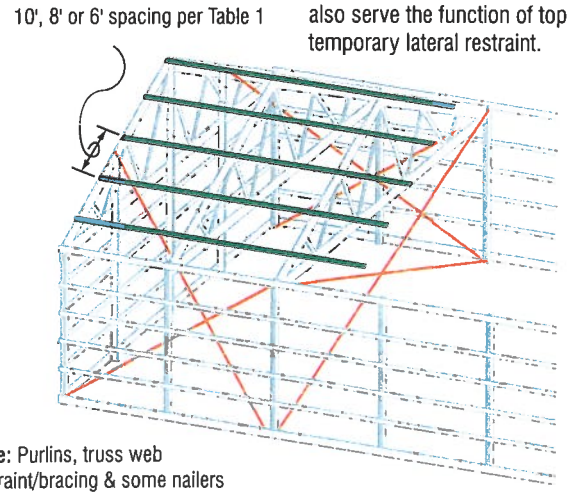

Note: Purlins, truss web restraint/bracing & some nailers omitted for clarity. See Step 3 for temporary restraint & bracing requirements for the trusses.

Figure H: Top Chord Temporary Lateral Restraint

Figura H: Restricción Lateral de la Cuerda Superior

TOP CHORD TEMPORARY LATERAL RESTRAINT SCHEDULE

EL HORARIO DE LA RESTRICCIÓN LATERAL TEMPORAL DE LA CUERDA SUPERIOR

Maximum truss spans for chord size, grade and spacing between rows of lateral restraint.

Los vanos máximos de trusses para la tamaña de la cuerda, grado y espacio entre las filas de restricción lateral.

Top Chord Size	Top Chord Grades (or Better)								
	No 1 Southern Pine			MSR 1950f 1.5E			MSR 2400f 1.8E		
	Maximum Spacing Between Rows of Lateral Restraint								
	10'	8'	6'	10'	8'	6'	10'	8'	6'
2x6	n/a	n/a	62'	n/a	25'	81'	n/a	42'	81'
2x8	n/a	27'	81'	n/a	43'	81'	22'	61'	81'
2x10	n/a	40'	81'	24'	57'	81'	35'	78'	81'
2x12	21'	53'	81'	34'	74'	81'	48'	81'	81'

TABLE 1

TABLA 1

IMPORTANT NOTE: Table 1 is applicable for symmetrical triangular metal plate connected wood trusses with pitched top chords of 3:12 or greater and flat bottom chords. Other truss types are expressly excluded. Truss spans listed in Table 1 are the maximum spans that can be safely restrained for the corresponding top chord species/grade/size shown, using the top chord temporary lateral restraint spacing provided. FOR TRUSS CONFIGURATIONS, SPANS AND/OR TOP CHORD GRADES NOT COVERED BY TABLE 1, CONSULT A REGISTERED DESIGN PROFESSIONAL.

NOTA IMPORTANTE: *La Tabla 1 es pertinente para simétricos trusses triangulares de madera conectados por chapas de metal con cuerdas superiores pendientes de 3:12 o más y cuerdas inferiores planas. Otros tipos de trusses son expresamente excluidos. Los tramos de trusses enumerados en la Tabla 1 son los tramos máximos que pueden ser restringidos sin peligro para los correspondientes especies/grados/tamaños de la cuerda superior mostrados, utilizando el espaciamiento de la restricción lateral temporal de la cuerda superior provisto. PARA LAS CONFIGURACIONES, TRAMOS Y/O GRADOS DE LA CUERDA SUPERIOR DE TRUSSES NO PROVISTOS EN LA TABLA 1, CONSULTE UN PROFESIONAL REGISTRADO DE DISEÑO.*

3.3 Install diagonal bracing in the top chord plane using,

Instale el arriostre diagonal en el plano de la cuerda superior usando,

a) Diagonal bracing with 2x4 lumber, minimum grade of SPF #2 (Figure I), or

Arriostre Diagonal con madera 2x4, mínimo grado de SPF #2 (Figura I), o

b) Metal strap cross bracing (Figure J), or

Arriostre de tira de metál de cruzamiento (Figura J), o

c) Permanent structural sheathing (plywood, OSB, corrugated steel, corrugated aluminum) or permanent roof bracing in accordance with the product manufacturer's instructions or construction documents.

El entablado estructural permanente (madera contrachapada, OSB, acero ondulado, aluminio ondulado) o arriostre permanente de techo de acuerdo con las instrucciones del fabricante o los documentos de construcción.

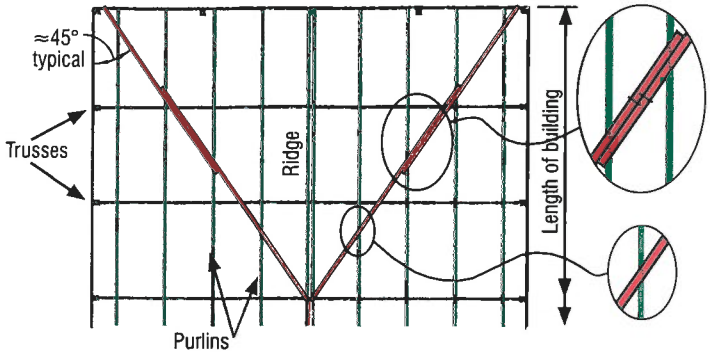

Figure I: Top Chord Diagonal Bracing using 2x4 Lumber

Figura I: Arriostre Diagonal de la Cuerda Superior - Utilizando Madera 2x4

Note: Diagonal braces run to the fourth truss on 48' & wider buildings. Braces lap two purlins if diagonal brace is spliced. Use 2-16d (0.135x3.5") nails at each diagonal brace-to-purlin connection.

Nota: *Arriostres diagonales corren al cuarto truss en edificios de 48 pies y más. Arriostres solapan dos vigas de soporte (purlins) si arriostre diagonal está empalmada. Use 2-16d (0.135x3.5 pulgadas) clavos en cada conexión de arriostre diagonal a viga de soporte (purlin).*

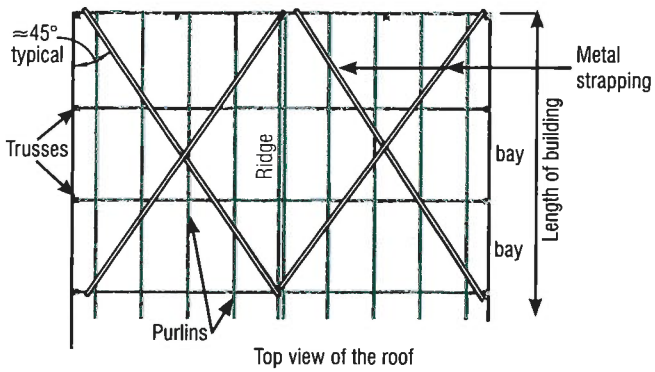

Note: Metal strap cross bracing is typically used when purlins are mounted flush between trusses. Run bracing to the fourth truss on 48' & wider buildings.

Nota: *Arriostre de tira de metál de cruzamiento es tipicamente usado cuando las vigas de soporte (purlins) esten montados al raso entre trusses. Corren al cuarto truss en edificios de 48 pies y más.*

Figure J: Top Chord Bracing using Metal Straps

Figura J: Arriostre de la Cuerda Superior Utilizando Tiras de Metal

3.4 Install rows of bottom chord temporary lateral restraint at a maximum of 15' on center. Install diagonal bracing to top of bottom chord between each row of lateral restraint to provide rigidity (Figure K). **Note:** Bottom chord **PERMANENT** lateral restraint shall be installed at no more than 10' on-center, but may be less if required by the specific truss design and/or the building designer. Temporary lateral restraint and diagonal bracing installed at the required spacing for the Permanent Building Stability Bracing (PBSB), and left in place, may become part of the PBSB system.

Instale las filas de restricción lateral temporal de la cuerda inferior a un máximo de 15 pies en centro. Instale el arriostre diagonal a la parte superior de la cuerda inferior entre cada fila de restricción lateral para proveer la rigidez (Figura K). ***Nota:*** *La restricción lateral* ***PERMANENTE*** *de la cuerda inferior será instalada a no más de 10' en centro, pero puede ser menos si es requerido por el diseño del truss específico y/o el Diseñador del Edificio. La Restricción Lateral Temporal y Arriostre Diagonal instalado al espaciamiento requerido para el Arriostre Permanente para la Estabilidad del Edificio (PBSB), y si es dejado en sitio, puede hacerse parte del sistema de PBSB.*

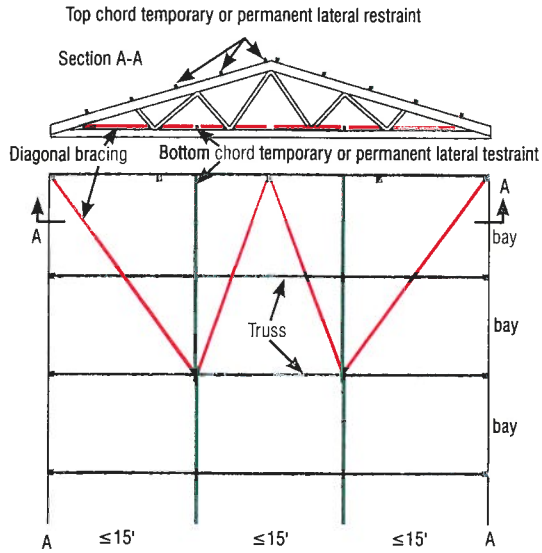

Figure K: Bottom Chord Restraint & Bracing

Figura K: Arriostre de Cuerda Inferior

3.5 Brace trusses vertically to prevent "rollover", i.e. rotation, using,

Arriostre trusses verticalmente para prevenir movimiento por ejemplo rotación, usando,

a) Truss-to-truss cross bracing at each row of bottom chord lateral restraint and at 20' intervals along the length of the building (Figure L), unless the provisions of Step 3.3c are applied to all trusses as they are being set, or

El arriostre de cruzamiento de truss-a-truss en cada fila de la restricción lateral de la cuerda inferior y a 20' intervalos por la longitud del edificio (Figura L) a menos que 3.3c sea aplicado a todos los trusses cuando se colocan, o

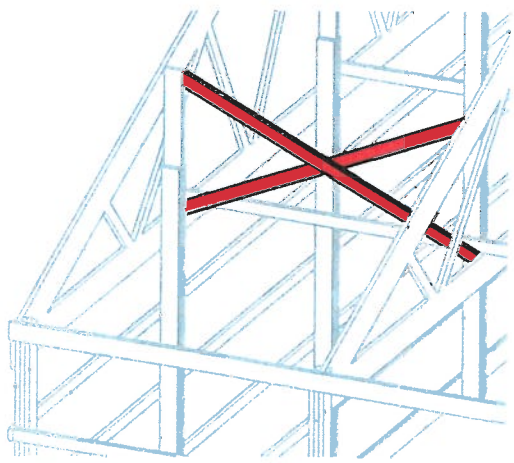

Figure L: Cross Bracing

Figura L: Arriostre de Cruzamiento

b) Chains or cables (Figure H) together with turnbuckles, or come-alongs of sufficient strength (min. 2000 lbs. capacity).

Cadenas o cables (Figura H) juntos con turnbuckles o come-alongs de suficiente fuerza (min. capacidad 2000 libras).

STEP 4: ERECT THE ADDITIONAL ROOF TRUSSES
INSTALE LOS TRUSSES DE TECHO ADICIONALES

4.1 Install top chord temporary lateral restraint at the appropriate spacing indicated in Table 1.

Instale la restricción lateral temporal de la cuerda superior al espaciamiento apropiado que se indique en la Tabla 1.

4.2 Provide additional top chord temporary diagonal bracing as described in 3.3 at intervals not to exceed 100' or 12 truss spaces, whichever is less.

Provee arriostre diagonal temporal adicional de la cuerda superior como se describe en 3.3 en intervalos que no exceded 100 pies o 12 espacios de trusses, cualquier es menos.

4.3 Install bottom chord temporary lateral restraint as indicated in Figure K. Provide additional temporary diagonal bracing in the plane of the bottom chord as indicated in Figure K, at intervals not to exceed 100' or 12 truss spaces, whichever is less.

Instale restricción lateral temporal de la cuerda inferior como se indique en la Figura K. Provee arriostre temporal diagonal adicional en el plano de la cuerda inferior como se indique en la Figura K, en intervalos que no exceden 100 pies o 12 espacios de trusses, cualquier es menos.

PERMANENT RESTRAINT/BRACING
RESTRICCIÕN/ARRIOSTRE PERMANENTE

The previous sections of this document provide important information and guidelines on temporary installation restraint/bracing of trusses. **Temporary** restraint/bracing provides support to the trusses during installation. **Permanent** restraint/bracing provides support to the trusses during the lifetime of the structure and resists the applied loads anticipated during that lifetime. If properly planned, much if not all of the temporary restraint/bracing installed during truss installation can be used to permanently restrain and brace the trusses.

Las secciones previas de este documento proveen información importante y pautas sobre la restricción/arriostre temporal de trusses durante la instalación. La restricción/arriostre ***temporal*** *provee apoyo a los trusses durante la instalación. La restricción/arriostre* ***permanente*** *provee apoyo a los trusses durante la vida de la estructura y resiste las cargas aplicadas cuales están anticipados para la vida. Si está planeado apropiadamente, mucho si no todo de la restricción/arriostre que es instalado durante la instalación puede ser utilizado para restringir y arriostrar los trusses permanente.*

PERMANENT RESTRAINT/BRACING MATERIALS & FASTENERS
MATERIALES Y CONECTORES DE RESTRICCIÕN/ARRIOSTRE PERMANENTES

Minimum Lumber for Permanent Restraint/Bracing[1]

Truss On-Center Spacing	Lumber Grade	Lateral Restraint Type	Diagonal Bracing Type
≤4 ft.	SPF No. 2	2x4	2x4
4<spacing≤6 ft.		2x4	2x4 with 2x4 L-Reinforcement[2]
6<spacing≤8 ft.		2x4 with 2x4 L-Reinforcement[2]	2x4 with 2x4 L-Reinforcement[2]
8<spacing≤12 ft.		2x4 with 2x4 L-Reinforcement[2]	2x6 with 2x6 L-Reinforcement[2]

[1]Other restraint/bracing may be specified by the building designer.

[2]Attach reinforcement to the full length of the lateral restraint or diagonal bracing with 16d (0.131x3.5") nails @ 6" on-center.

TABLE 2
TABLA 2

☑ Use at least 2-16d (0.135 x 3.5") nails to attach lumber lateral restraint and diagonal bracing members to each truss or as specified by the building designer. For 2x6 or greater lateral restraint and diagonal bracing, use a minimum of three nails per connection.

Use por lo menos 2-16d (0.135x3.5") clavos para sujetar los miembros de madera para la restricción lateral y arriostre diagonal a cada truss o como es especificado por el diseñador del edificio. Para 2x6 o más restricción lateral y arriostre diagonal, use un mínimo de tres clavos por cada conexión.

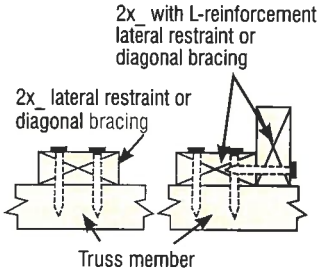

Figure M
Figura M

PERMANENT BRACING FOR THE VARIOUS PLANES OF A ROOF TRUSS

ARRIOSTRE PERMANENTE PARA LOS VARIOS PLANOS DE UN TRUSS DE TECHO

Trusses require permanent bracing within ALL of the following planes:

1. Top Chord Plane
2. Bottom Chord Plane
3. Web Member Plane

Trusses requieren el arriostre permanente en TODOS los siguientes planos.

1. El plano de la cuerda superior
2. El plano de la cuerda inferior
3. El plano del miembro secundario

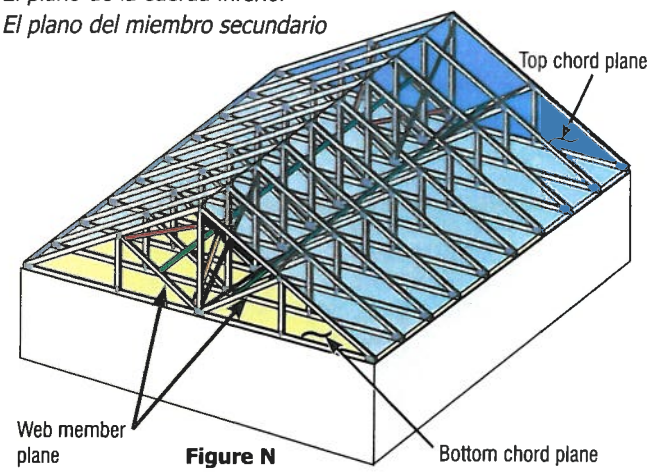

Figure N
Figura N

1. PERMANENT BRACING FOR THE TOP CHORD PLANE

ARRIOSTRE PERMANENTE PARA EL PLANO DE LA CUERDA SUPERIO

☑ Permanently brace the top chord plane with,
- Structural sheathing (e.g. plywood, OSB, metal decking, etc.) attached directly to the top chord, or
- Wood or metal structural purlins that are properly braced.

Arriostrar permanentemente el plano de la cuerda superior con,
- *El entablado estructural (ej: contrachapado, OSB, cubierta de metal, etc.) sujetado directamente a la cuerda superior, o*
- *Las vigas de soporte estructural (purlins) de madera o metal cuales están colocados apropiadamente.*

☑ If purlins are used, the trusses must be designed so that the maximum allowable unbraced length for the top chord is greater than or equal to the on-center spacing of the purlins. Check the truss design drawing(s) to verify. Notify the truss manufacturer immediately if this is <u>not</u> the case.

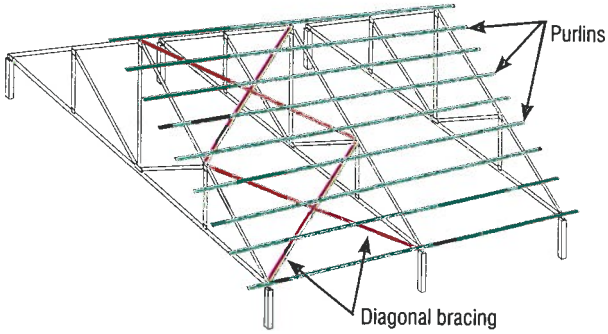

Figure O: Purlins (i.e., lateral restraint) with diagonal bracing installed in the top chord plane

Figure O: Si se use vigas de soporte, los trusses tienen que ser diseñados para que la longitud sin arriostre de

Si vigas de soporte son usados, los trusses deben ser designados para que el máximo longitud sin arriostre que es permisible para la cuerda superior es más grande que o igual a el espaciamiento en centro de la vigas de soporte. Revise los Dibujos de Diseño del Truss para verificar. Informe al fabricante del truss inmediatamente si no esta el caso.

NOTICE The purlins alone will not adequately brace or prevent buckling of the top chord and must themselves be braced. This bracing can be provided by:

Las vigas de soporte solas no arriostrarán adecuadamente o prevendrán la torsión de la cuerda superior y tienen que ser arriostrados ellas mismas. Este arriostre puede ser provisto por:

- Installing diagonal bracing to the top chord plane (Figure O) at intervals provided by the building designer to provide rigidity and to transfer the restraining forces from the purlins to a lateral force resisting system (e.g., braced wall panels, shearwalls, braced frames, etc.), or

  Instalar el arriostre diagonal al plano de la cuerda superior (Figura O) en intervalos provistos por el diseñador del edificio para proveer la rigidez y para transmitir las fuerzas restringidas de las vigas de soporte a un sistema de resistir la fuerza lateral (ej: paneles de pared arriostrados, shearwalls, armazones arriostrados, etc.)

- Attaching structural sheathing directly to the purlins.

  Sujetar el entablado estructural directamente a las vigas de soporte.

NOTICE Not all sheathing products are structural. The building designer is responsible for the design and detailing of the structural sheathing and diaphragms.

Todos los productos de entablar no son estructurales. El diseñador del edificio tiene la responsabilidad para el diseño y los detalles del entablado estructural y los diafragmas.

2. PERMANENT BRACING FOR THE BOTTOM CHORD PLANE

ARRIOSTRE PERMANENTE PARA EL PLANO DE LA CUERDA INFERIOR

☑ Permanently brace the bottom chord plane with,
- a directly attached rigid celing, or
- lateral restraint properly braced against lateral movement.

Arriostrar permanentemente el plano de la cuerda inferior con,
- *un techo rígido sujetado directamente, o*
- *a restricción lateral arriostrado apropiadamente contra el movimiento lateral.*

☑ Install bottom chord permanent lateral restraint in rows spaced no greater than 10' on-center, unless a closer spacing is indicated on the Truss Design Drawing (TDD) or by the buidling designer.

Instale la restricción lateral permanente de la cuerda inferior en filas espaciados no más de 10 pies en centro, a menos que un espaciamiento más cercano es indicada en el Dibujo del Diseño de Truss (TDD) o por el diseñador del edificio.

☑ **Install rows of diagonal bracing at intervals no greater than 20' along the length of the building, or as specified by the building designer.**

Instale filas de arriostre diagonal en intervalos no más de 20 pies por la longitud del edificio, o como es especificado por el diseñador del edificio.

NOTICE Reinforce lateral restraint and diagonal bracing as required for truss spacings greater than 4' o.c. Refer to Table 2 or as specified by the building designer.

Refuerce la restricción lateral y el arriostre diagonal como requerido para espaciamientos de trusses más de 4 pies en centro. Refiere a la Tabla 2 o como es especificado por el diseñador del edificio.

3. PERMANENT BRACING FOR THE WEB MEMBER PLANE
ARRIOSTRE PERMANENTE PARA EL PLANO DEL MIEMBRO SECUNDARIO

Individual Web Member Permanent Restraint & Diagonal Bracing
Restricción Permanente y Arriostre Diagonal de Miembros Secundarios Individuos

☑ Refer to the TDD to determine which webs (if any) require restraint and bracing to prevent buckling.
Refiere al TDD para determinar cuales miembros secundarios (si algunas) requieren restricción y arriostre para prevenir la rotación.

☑ Provide restraint and bracing using,

a) • Minimum 2x_ lumber per Table 2, or as specified by the building designer.
un mínimo de 2x_ madera según la Tabla 2 o como es especificado por el diseñador del edificio.

- Attach lateral restraint to webs at locations shown on the TDD. Webs may require one or two rows of lateral restraint (Figure P).
Sujete la restricción lateral a los miembros secundarios en los lugares mostrados en el TDD. Miembros secundarios pueden requerir uno o dos filas de la restricción lateral (Figura P).

- Attach diagonal bracing at an angle of approximately 45° to the lateral restraint (Figures Q & R). Position diagonal brace to cross the web in close proximity to lateral restraint and attach diagonal brace as close to top and bottm chord as possible and to each web that it crosses.
Sujete el arriostre diagonal a un ángulo de aproximadamente 45 grados a la restricción latera (Figuras Q y R). Posicione el arriostre diagonal para que cruce el miembro secundario muy cerca de la restricción lateral y sujete el arriostre diagonal tan cerca como posible a las cuerdas superiores e inferiores y a cada miembro secundario que se cruza.

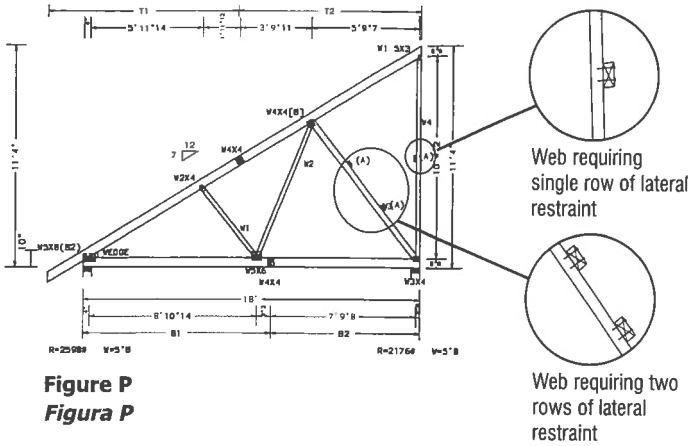

Figure P
Figura P

EXAMPLES OF DIAGONAL BRACING WITH ONE ROW OF CONTINUOUS LATERAL RESTRAINT (CLR)

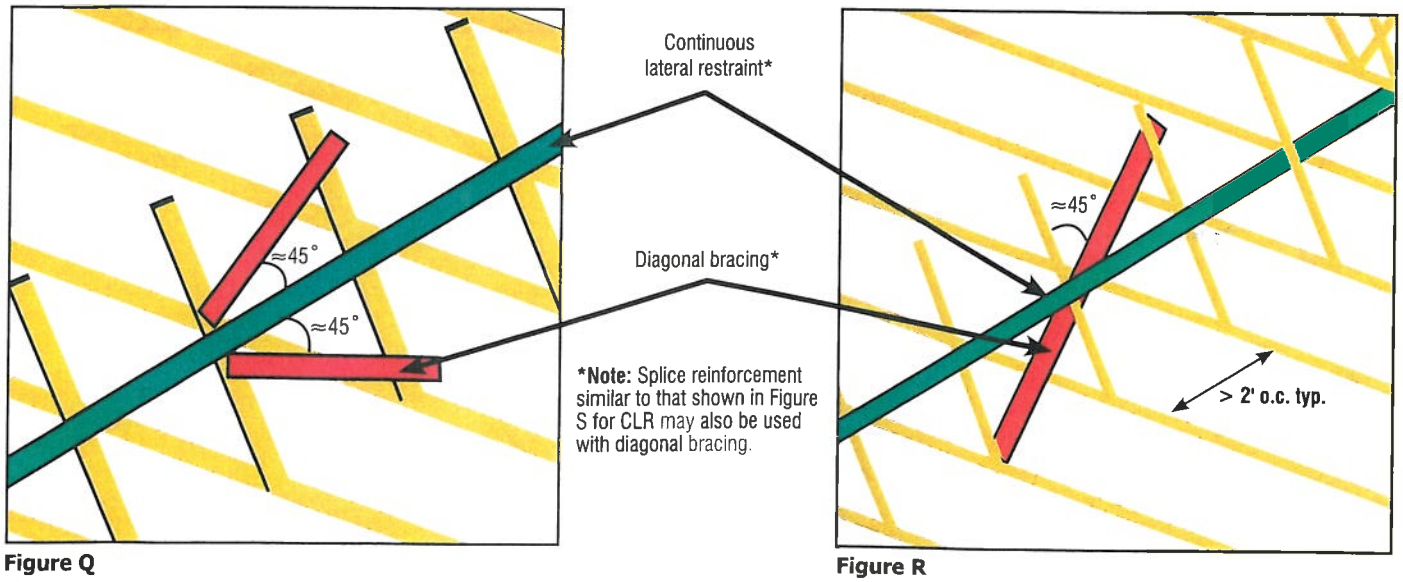

Figure Q
Figura Q

Figure R
Figura R

- **Repeat diagonal bracing at 12' intervals along the run of trusses (Figure S) or as specified by the building designer.**

  Repita el arriostre diagonal en intervalos de 12 pies por los trusses (Figura S) o como especificado por el diseñador del edificio.

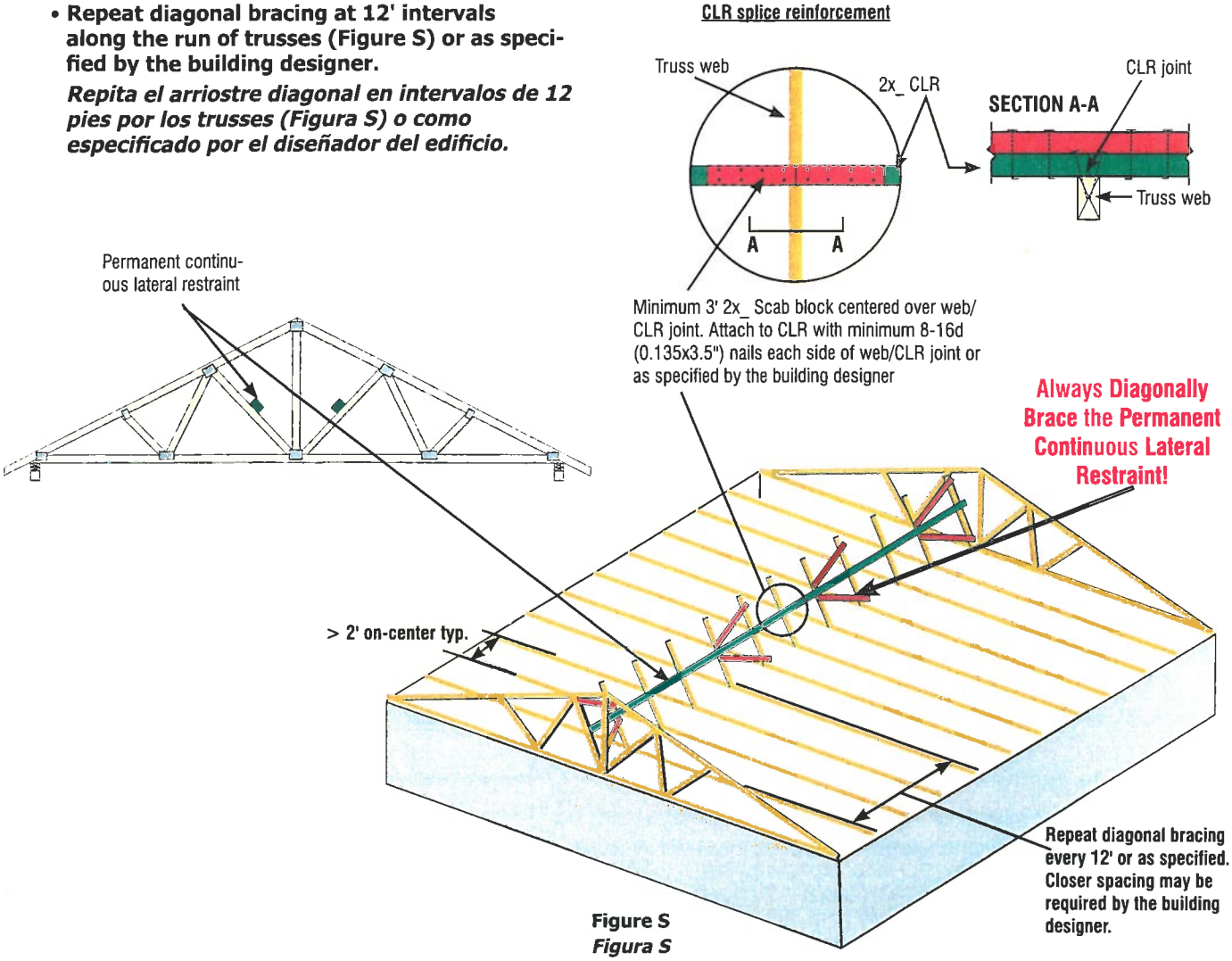

Figure S
Figura S

Note: Some chord and web members not shown for clarity.

- For webs that require two rows of CLR, the concepts are the same as those used for bracing a single row of CLR (Figures T & U). Position the diagonal brace(s) to cross the webs in close proximity to each lateral restraint. Attach the diagonal brace(s) as close as possible to the top and bottom chord plane and to each web that the diagonal brace(es) crosses.

  Para los miembros secundarios que requieren dos filas de CLR, las ideas son las mismas como usadas para arriostre de una sola fila de CLR (Figuras T y U). Posicone el arriostre(s) diagonal(es) a cruzar los miembros secundari os en proximidad cercano a cada restricción lateral. Sujete el arriostre(s) diagonal(es) tan cerca como sea posible al plano de la cuerda superior e inferior y a cada miembro secundario que el arriostre(s) diagonal(es) cruce(n).

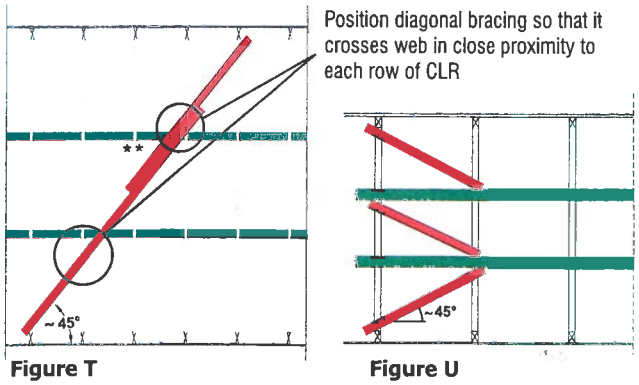

Figure T
Figura T

Figure U
Figura U

****Note:** Splice reinforcement similar to that shown in Figure S may also be used with diagonal bracing in lieu of overlap shown here.

NOTICE Reinforce lateral restraint and diagonal bracing as required for truss spacings greater than 4' o.c. Refer to Table 2 or as specified by the building designer.

Refuerce la restricción lateral y arriostre diagonal como es requerido para espaciamiento de trusses más de 4 pies en centro. Refiere a la Tabla 2 o como especificado por el diseñador del edificio.

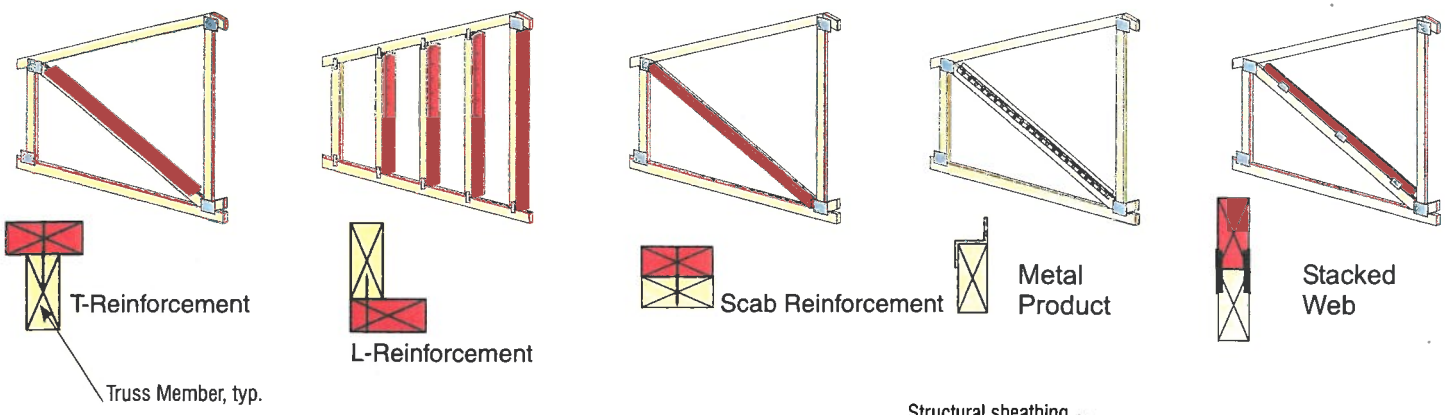

Figure V: Types of member reinforcement.
Figura V: Tipos de refuerzo de miembros secundarios

b) • Web member restraint and bracing can also be provided using T-, L-, Scab, I- or U-reinforcement, which involve adding lumber or proprietary metal reinforcement to increase the web's section properties (Figure V).

Restricción y arriostre de miembros secundarios también puede ser provisto utilizando T-, L-, Scab-, I-, o U-refuerzo, que involucran añadir madera o refuerzo de metal patentado para aumentar las propiedades de la sección del miembro secundario (Figura V).

• Refer to TDD for web reinforcement type and attachment or as specifed by the building designer.

Refiere al TDD para el tipo de refuerzo de miembros secundarios y accesorio o como especificado por el diseñador del edificio.

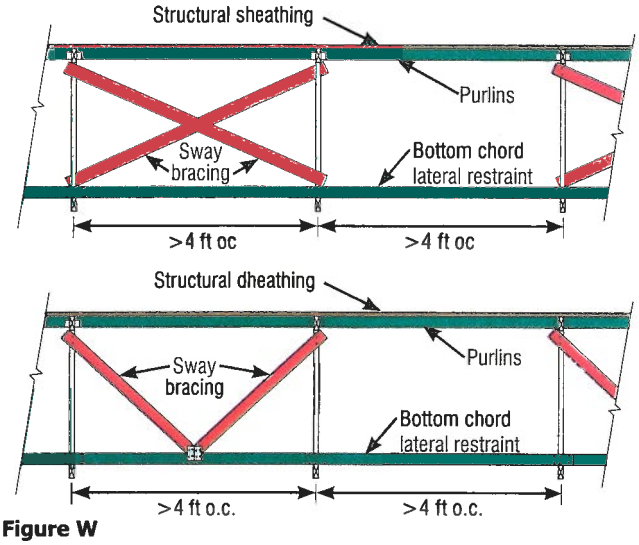

Figure W
Figura W

PERMANENT BRACING FOR SPECIAL CONDITIONS
ARRIOSTRE PERMANENTE PARA CONDICIONES ESPECIALES

☑ Permanent Building Stability Bracing (PBSB) for wind, seismic and/or other lateral loads acting perpendicular to the plane of the trusses is needed in every building, and is specified by the building designer.

El Arriostre Permanente para la Estabilidad del Edificio (PBSB) para cargas de viento, sísmicos, y/o otras cargas laterales actuando perpendiculares al plano de los trusses es necesario en cada edificio, y es especificado por el diseñador del edificio.

Sway Bracing
Arriostre de "Sway"

☑ Sway bracing is typically installed on web members (verticals whenever possible) located at or near each row of bottom chord lateral restraint and should extend from the top chord plane to the bottom chord plane at right angles to the trusses (Figures W & X).

Típicamente, arriostre de "sway" es instalado en miembros secundarios (verticals cuando sea posible), localizado en o cerca de cada fila de restricción lateral de la cuerda inferior y debe extender del plano de la cuerda superior al plano de la cuerda inferior a ángulos derechos a los trusses (Figuras W y X).

☑ Sway bracing is designed and installed at the discretion of the building designer and is not always required.

Arriostre de "sway" es diseñado e instalado al criterio del diseñador del edificio y no es siempre requerido.

NOTICE Reinforce lateral restraint and diagonal bracing as required for truss spacings greater than 4' o.c. Refer to Table 2 or as specified by the building designer.

Refuerce la restricción lateral y arriostre diagonal como es requerido para espaciamiento de trusses más de 4 pies en centro. Refiere a la Tabla 2 o como especificado por el diseñador del edificio.

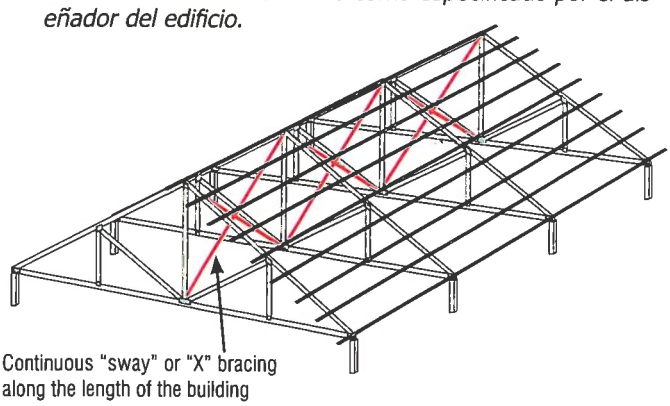

Figure X
Figura X

PERMANENT BRACING FOR THE TOP CHORD IN A PIGGYBACK ASSEMBLY

ARRIOSTRE PERMANENTE PARA LA CUERDA SUPERIOR EN UN ENSAMBLAJE DE PIGGYBACK

☑ With a Piggyback assembly, make sure that the portion of the top chord of the supporting truss located directly beneath the cap truss is adequately braced to prevent it from buckling out from under the cap truss. Bracing for this portion of the top chord is accomplished in several ways including:

- CLR and diagonal bracing using stress-graded lumber (Figure Y)
- Connecting the CLR into the roof diaphragm
- Applying structural sheathing to the CLR
- Some other equivalent means

Con un ensamblaje de piggyback, asegúrese que la parte de la cuerda superior del truss soportante localizado directamente debajo el truss de capa es arriostrado adecuadamente para prevenir que torció fuera debajo del truss de capa. El arriostre para esta parte de la cuerda superior es llevado a cabo en varias maneras incluyendo:

- *CLR y arriostre diagonal utilizando madera graduada por esfuerza (Figura Y)*
- *Conectar el CLR en la diafragma del techo*
- *Aplicar el entablado estructural al CLR*
- *Otras maneras equivalentes*

☑ If diagonal bracing is used to brace the CLR, **repeat the diagonal bracing at 8' intervals or as specified. Closer spacing may be required by the building designer.**

Si el arriostre diagonal es utilizado para arriostrar el CLR, ***repite el arriostre diagonal en intervalos de 8 pies o como es especificado. El espaciamiento más cercano puede ser requerido por el diseñador del edificio.***

☑ If a structural sheathing is used to brace the CLR, provide openings, to permit ventilation within the roof assembly.

Si un entablado estructural es utilizado para arriostrar el CLR, provee aberturas, para permitir la ventilación adentro del ensamblaje del techo.

☑ Refer to the TDD for the maximum assumed spacing for attaching the lateral restraint to the top chord. The TDD also provides the assumed thickness of the restraint and the minimum connection requirements between the cap and the supporting truss or restraint.

Refiere al TDD para el espaciamiento máximo supuesto para sujetar la restricción lateral a la cuerda superior. El TDD también provee la anchura supuesto de la restricción y los requisitos de la conexión mínima entre la capa y el truss soportante o el restricción.

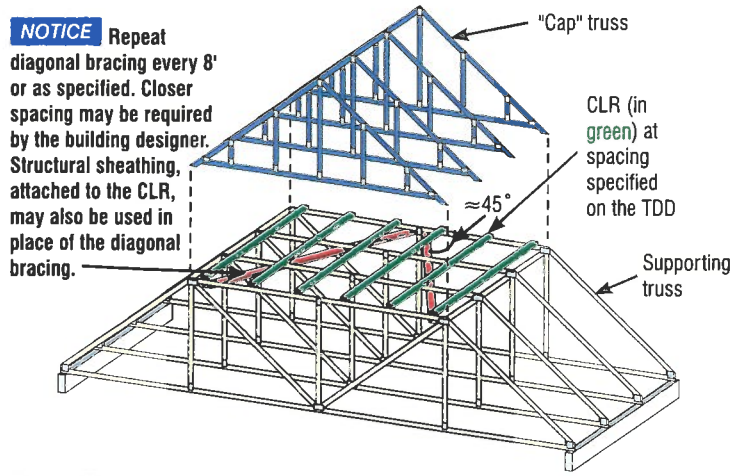

Figure Y: Piggyback Assembly with lateral restraint and diagonal bracing to brace the top chord of the supporting trusses.

Figure Y: Ensamblaje de piggyback con restricción lateral y arriostre diagonal para arriostrar la cuerda superior de los trusses soportantes.

NOTICE Reinforce lateral restraint and diagonal bracing as required for truss spacings greater than 4' o.c. Refer to Table 2 or as specified by the building designer.

Refuerce la restricción lateral y el arriostre diagonal como sea requerido para espaciamientos de trusses más de 4 pies en centro. Refiere a la Tabla 2 o como especificado por el diseñador del edificio.

☑ Install all of the required temporary restraint and bracing discussed in this document AND the top chord permanent restraint and bracing discussed in this section BEFORE installing the cap trusses.

Instale toda la restricción temporal y arriostre requerido discutido en este documento Y la restricción y arriostre permanente de la cuerda superior discutido en esta sección ANTES de instalar los trusses de capas.

☑ Refer to **BCSI-B3***** for additional information regarding permanent restraint/bracing for truss chords and web members.

Refiere al ***BCSI-B3****** *para más información sobre la restricción/arriostre permanente para cuerdas de trusses y miembros secundarios.*

*****Contact the component manufacturer to obtain the referenced document or consult a Registered Design Professional for more information on this subject.**

To view a non-printing PDF of this document, visit www.sbcindustry.com/b10.

This document summarizes the information provided in Section B10 of the 2008 Edition of Building Component Safety Information BCSI - Guide to Good Practice for Handling, Installing, Restraining & Bracing of Metal Plate Connected Wood Trusses. Copyright © 2004-2009 Structural Building Components Association and Truss Plate Institute. All Rights Reserved. This guide or any part thereof may not be reproduced in any form without the written permission of the publishers. Printed in the United States of America.

SBC ASSOCIATION
WTCA WOOD TRUSS COUNCIL
6300 Enterprise Lane • Madison, WI 53719
608/274-4849 • www.sbcindustry.com

TRUSS PLATE INSTITUTE
218 North Lee Street, Ste. 312
Alexandria, VA 22314
703/683-1010 • www.tpinst.org

Safety data sheet
SL2 BASF SELF LEVELING

1. Substance/preparation and company identification

Company
BASF Construction Chemicals
100 Campus Drive
Florham Park, NJ 07932

24 Hour Emergency Response Information
CHEMTREC: 1-800-424-9300
BASF HOTLINE: 1-800-832-HELP

2. Composition/information on ingredients

CAS Number	Content (W/W)	Chemical name
1317-65-3	40.0 - 70.0 %	Limestone
471-34-1	5.0 - 10.0 %	Calcium carbonate
8052-41-3	5.0 - 10.0 %	Stoddard solvent
14808-60-7	0.1 - 1.0 %	crystalline silica

3. Hazard identification

Emergency overview

WARNING: COMBUSTIBLE LIQUID AND VAPOR.
MAY CAUSE EYE, SKIN AND RESPIRATORY TRACT IRRITATION.
MAY BE HARMFUL IF SWALLOWED.
REPORTS HAVE ASSOCIATED REPEATED AND PROLONGED OCCUPATIONAL OVEREXPOSURE TO SOLVENTS WITH PERMANENT BRAIN AND NERVOUS SYSTEM DAMAGE.
Overexposure may cause CNS depression including headache, dizziness, nausea and loss of consciousness.
Keep container tightly closed.
Avoid all sources of ignition: heat, sparks, open flame.
No exposure to respirable Crystalline (quartz) Silica anticipated with recommended use of product.

Potential health effects

Primary routes of exposure
Routes of entry for solids and liquids include eye and skin contact, ingestion and inhalation. Routes of entry for gases include inhalation and eye contact. Skin contact may be a route of entry for liquified gases.

Acute toxicity:
Information on: Stoddard solvent
Aspiration may result in chemical pneumonitis, which may be fatal.

Repeated dose toxicity:
Information on: Stoddard solvent
Overexposure may cause liver and kidney toxicity.
Repeated exposures may result in pulmonary congestion.

4. First-aid measures

General advice:
First aid personnel should pay attention to their own safety. Remove contaminated clothing.

If inhaled:
If difficulties occur after vapour/aerosol has been inhaled, remove to fresh air and seek medical attention.

If symptoms persist, seek medical advice.

If on skin:
Wash thoroughly with soap and water. If irritation develops, seek medical attention.

If in eyes:
Wash affected eyes for at least 15 minutes under running water with eyelids held open. If irritation develops, seek medical attention.

If swallowed:
Rinse mouth immediately and then drink plenty of water, seek medical attention.

Never induce vomiting or give anything by mouth if the victim is unconscious or having convulsions.

5. Fire-fighting measures

Flash point:	148.5 °F	(ASTM D93)
	64 °C	(ASTM D93)
Autoignition:		No data available.
Lower explosion limit:	0.9 %(V)	
Upper explosion limit:	7.0 %(V)	

Suitable extinguishing media:
carbon dioxide, alcohol-resistant foam, dry extinguishing media, water fog

Hazards during fire-fighting:
carbon monoxide, carbon dioxide, harmful vapours
Evolution of fumes/fog.

Protective equipment for fire-fighting:
Wear a self-contained breathing apparatus.

Further information:
Remove product from areas of fire, or otherwise cool containers with water in order to avoid pressure build up due to heat. The degree of risk is governed by the burning substance and the fire conditions. Contaminated extinguishing water must be disposed of in accordance with official regulations.

6. Accidental release measures

Personal precautions:
Do not breathe vapour/aerosol/spray mists. Use personal protective clothing. Avoid contact with the skin, eyes and clothing. Handle in accordance with good industrial hygiene and safety practice.

Environmental precautions:
Contain contaminated water/firefighting water. Do not discharge into drains/surface waters/groundwater.

Cleanup:

For small amounts: Pick up with suitable appliance and dispose of. Contain with absorbent material (e.g. sand, silica gel, acid binder, general purpose binder, sawdust). Dispose of contaminated material as prescribed.
For large amounts: Pump off product.

7. Handling and storage

Handling

General advice:
Keep away from sources of ignition - No smoking. Breathing must be protected when large quantities are decanted without local exhaust ventilation. Ensure adequate ventilation.

Protection against fire and explosion:
Keep away from heat. Prevent electrostatic charge - sources of ignition should be kept well clear - fire extinguishers should be kept handy.

Storage

General advice:
Containers should be stored tightly sealed in a dry place. Keep away from heat. Store protected against freezing. Keep only in the original container.

Storage incompatibility:
General: Segregate from metals. Segregate from lyes. Segregate from oxidants. Segregate from foods and animal feeds.

8. Exposure controls and personal protection

Components with workplace control parameters

Limestone	OSHA	PEL 5 mg/m3 Respirable fraction ; PEL 15 mg/m3 Total dust ;
Calcium carbonate	OSHA	PEL 5 mg/m3 Respirable fraction ; PEL 15 mg/m3 Total dust ;
Stoddard solvent	OSHA	PEL 500 ppm 2,900 mg/m3 ;
	ACGIH	TWA value 100 ppm ;
crystalline silica	OSHA	TWA value 2.4 millions of particles per cubic foot of air Respirable ; TWA value 0.1 mg/m3 Respirable ; TWA value 0.3 mg/m3 Total dust ;
	ACGIH	TWA value 0.025 mg/m3 Respirable fraction ;

Personal protective equipment

Respiratory protection:
When workers are facing concentrations above the occupational exposure limits they must use appropriate certified respirators.

Hand protection:
Wear chemical resistant protective gloves., Manufacturer's directions for use should be observed because of great diversity of types.

Eye protection:
Tightly fitting safety goggles (chemical goggles).

Body protection:
Body protection must be chosen based on level of activity and exposure.

General safety and hygiene measures:
Avoid contact with the skin, eyes and clothing. In order to prevent contamination while handling, closed working clothes and working gloves should be used. Handle in accordance with good building materials hygiene and safety practice. When using, do not eat, drink or smoke. Hands and/or face should be washed before breaks and at the end of the shift. At the end of the shift the skin should be cleaned and skin-care agents applied. Gloves must be inspected regularly and prior to each use. Replace if necessary (e.g. pinhole leaks).

9. Physical and chemical properties

Form:	liquid	
Odour:	solvent-like	
Colour:	various colours	
pH value:		No data available.
Boiling range:	153 - 251 °C	
Vapour pressure:		No data available.
Relative density:	11.6 - 12.2	(23 °C)
Vapour density:		Heavier than air.
Partitioning coefficient n-octanol/water (log Pow):		No data available.
Viscosity, dynamic:		No data available.
% volatiles:	64.4 g/l	VOC concentration expressed as applied when all components are mixed and applied per manufacturer's instructions.
Solubility in other solvents:		slightly soluble

10. Stability and reactivity

Substances to avoid:
oxidizing agents

Hazardous reactions:
The product is stable if stored and handled as prescribed/indicated.

Decomposition products:
carbon oxides

Thermal decomposition:
No decomposition if stored and handled as prescribed/indicated.

11. Toxicological information

Carcinogenicity:
Information on: crystalline silica
The International Agency for Research on Cancer (IARC) has classified this substance as a Group 1 (known) human carcinogen.

Other information:
Information on: Stoddard solvent
In tests with mammals a central nervous system disorder was observed.
---

12. Ecological information

Environmental toxicity

Other ecotoxicological advice:
Ecological data are not available.

13. Disposal considerations

Waste disposal of substance:
Recommendations: Use excess product in an alternate beneficial application.
Dispose of in accordance with national, state and local regulations.

Container disposal:
Contaminated packaging should be emptied as far as possible; then it can be passed on for recycling after being thoroughly cleaned.

14. Transport information

Land transport
USDOT

Hazard class:	C
Packing group:	III
ID number:	NA 1993
Hazard label:	CBL
Proper shipping name:	COMBUSTIBLE LIQUID, N.O.S. (contains MINERAL SPIRIT/WHITE SPIRIT) Classified as combustible liquid in containers greater than 119 gallons.

Sea transport
IMDG

Hazard class:	3
Packing group:	III
ID number:	UN 1993
Hazard label:	3
Marine pollutant:	NO
Proper shipping name:	FLAMMABLE LIQUID, N.O.S. (contains MINERAL SPIRIT/WHITE SPIRIT)

Air transport
IATA/ICAO

Hazard class:	3
Packing group:	III
ID number:	UN 1993
Hazard label:	3
Proper shipping name:	FLAMMABLE LIQUID, N.O.S. (contains MINERAL SPIRIT/WHITE SPIRIT)

15. Regulatory information

Federal Regulations

Registration status:
TSCA, US released / listed

OSHA hazard category: IARC 1, 2A or 2B carcinogen, NTP listed carcinogen, Chronic target organ effects reported, ACGIH TLV established, Combustible Liquid

SARA hazard categories (EPCRA 311/312): Acute, Chronic, Fire

State regulations

State RTK

CAS Number	Chemical name	State RTK
1317-65-3	Limestone	MA, PA
471-34-1	Calcium carbonate	MA, PA
14808-60-7	crystalline silica	MA, NJ, PA

CA Prop. 65:
THIS PRODUCT CONTAINS A CHEMICAL(S) KNOWN TO THE STATE OF CALIFORNIA TO CAUSE CANCER.

16. Other information

HMIS III rating
Health: 2¤ Flammability: 2 Physical hazard: 0

HMIS uses a numbering scale ranging from 0 to 4 to indicate the degree of hazard. A value of zero means that the substance possesses essentially no hazard; a rating of four indicates high hazard.

END OF DATA SHEET

BASF

The Chemical Company

PRODUCT DATA

7 07 92 00 **Joint Sealants**

SONOLASTIC® SL 2™

Multi-component self-leveling polyurethane sealant

Description

SL 2™ is a multi-component, self-leveling, elastomeric polyurethane sealant that is mixed and poured in place. When cured, it forms a tough, resilient joint seal that resists penetration, abrasion, and remains flexible when exposed to weather and aging.

Yield

See page 3 for chart.

PRIMER 733

450 linear ft (137 m) per pint for a 1/2" (13 mm) deep joint.

Packaging

SL 2™

1.5 gallon units (5.67 L) containing Part A and Part B

3 gallon units (11.34 L) containing Part A and Part B

PRIMER 733

1 pint (473 ml) cans, 12 pints per carton

Color

40 standard, stocked colors are available. Refer to the Popular Palette for Sealants and Waterproofing.

463 standard (nonstocked) colors are also available, and custom matching can be done upon request. Refer to the Sonneborn® Color Portfolio.

Available in pretinted colors: precast gray and limestone

1.5 gallon (5.7 L) units

3 gallon (11.4 L) units

4.5 gallon (17 L) units

Minimum order is 100 pails in 4.5 gallon units.

Features	Benefits
• Movement capability ±25%	Expands and contracts with joint movement
• Abrasion resistant	Handles pedestrian and vehicular traffic
• Penetration resistant	Withstands pressure from pointed objects
• Resilient	Resists permanent deformation
• Resistant to weathering and aging	Provides long-lasting durability
• Service range from -40 to 180° F (-40 to 82° C)	Suitable for all climates
• Available in custom colors	Can be color matched to any substrate
• Self-leveling and slope grades	Provides application versatility
• Suitable for water immersion	Documented performance in wet areas

Shelf Life

PARTS A AND B:
1 year when properly stored

COLOR PACKS:
5.5 years

Storage

Store in unopened containers in cool, clean, dry area out of direct sunlight. Elevated temperatures will shorten shelf life.

Where to Use

APPLICATION

- Expansion joints
- Sidewalks
- Pavements
- Decks
- Parking ramps
- Precast double T's
- Cantilever decks
- Warehouses
- Balconies
- Industrial applications
- Wastewater treatment plants
- Dams
- Spillways and storm drains
- Wetwells and manholes

LOCATION

- Horizontal or sloped
- Interior or exterior
- Immersed in water

SUBSTRATE

- Concrete
- Metal

Sonneborn®

Technical Data

Composition

SL 2™ is a multi-component polyurethane that cures by chemical reaction after proper mixing.

Compliances

- ASTM C 920, Type M, Grade P, Class 25, Use T, NT, M, A and I
- Federal Specification TT-S-00227E, Type I, Class A
- Corps of Engineers CRD-C-506, Type I, Class A
- Canadian Specification CAN/CGSB 19.24-M90, Classification MCG-1-40-B-L, No. 81031
- Canadian approval for use in establishments that handle food
- USDA compliant for use in areas that handle meat and poultry

Test Data

PROPERTY	RESULTS SL 2™	RESULTS SL 2™ SLOPE GRADE	TEST METHODS
Movement capability, %	±25	±25	ASTM C 719
Tensile strength, psi (MPa)	125 (0.9)	145 (1.0)	ASTM D 412
Elongation, %	240	225	ASTM D 412
Shrinkage	Nil	Nil	
Low-temperature flexibility, -15° F (-26° C)	Passes	Passes	ASTM C 793
Service temperature range, -40 to 180° F (-40 to 82° C)	Passes	Passes	
Stain and color change	None (no visible stain)	None (no visible stain)	ASTM C 510
Extrusion rate and application life	Passes	Passes	ASTM C 603
Rheological (flow), at 40° F (4° C)	Self-leveling	—	ASTM C 639
Hardness, Shore A			ASTM C 661
At standard conditions	30	30	
After heat aging (max Shore A: 50)	40	20	
Tack-free time, hrs, (Maximum 72 hrs)	< 24	< 24	ASTM C 679
Bond durability, on concrete, ±25% movement	Passes*	Passes*	ASTM C 719
Weight loss, after heat aging, %	5	5	ASTM C 792
Cracking and chalking, after heat aging	None	None	ASTM C 792
Artificial weathering, Xenon arc, 250 hours	Passes*	Passes*	ASTM C 793
Artificial weathering, Xenon arc, 2,000 hours	No surface cracking	No surface cracking	ASTM G 26
Adhesion in peel, on concrete	Passes*	Passes*	ASTM C 794
Water immersion, 122° F (50° C)	Passes 10 weeks with movement cycling	Passes 10 weeks with movement cycling	ASTM C 1247

*Primed for water immersion dictated by ASTM C 920.

Test results are typical values obtained under laboratory conditions. Reasonable variations can be expected.

Y

LINEAR FEET PER GALLON

JOINT DEPTH (INCHES)	JOINT WIDTH (INCHES) 1/4	3/8	1/2	5/8	3/4	7/8	1
1/4	308	205	154	122	—	—	—
3/8	—	—	82	68	58	51	—
1/2	—	—	—	—	51	44	38

METERS PER LITER

JOINT DEPTH (MM)	JOINT WIDTH (MM) 6	10	13	16	19	22	25
6	24.8	16.5	12.4	9.8	—	—	—
10	—	—	—	6.6	5.5	4.7	4.1
13	—	—	—	—	4.1	3.5	3.0

H A

J P

1. The number of joints and the joint width should be designed for a maximum of ±25% movement.

2. The depth of the sealant should be 1/2 the width of the joint. The maximum depth is 1/2" (13 mm) and the minimum is 1/4" (6 mm) Maximum recommended joint width is 2-1/2" (64 mm). Refer to Table 1.

3. In deep joints, the sealant depth must be controlled by Closed-Cell Backer-Rod or Soft Backer-Rod (see Form No. 1026342). Where the joint depth does not permit the use of backer-rod, a bondbreaker (polyethylene strip) must be used to prevent three-point bonding.

4. To maintain the recommended sealant depth, install backer-rod by compressing and rolling it into the joint channel without stretching it lengthwise. Closed-Cell Backer-Rod should be about 1/8" (3 mm) larger in diameter than the width of the joint to allow for compression. Soft Backer-Rod should be approximately 25% larger in diameter than the joint width. The sealant does not adhere to it, and no separate bondbreaker is required. Do not prime or puncture the backer-rod.

TABLE 1

J W S D

JOINT WIDTH, IN (MM)	SEALANT DEPTH AT MIDPOINT, IN (MM)
1/4 – 1/2 (6 – 13)	1/4 (6)
1/2 – 3/4 (13 – 19)	1/4 – 3/8 (6 – 10)
3/4 – 1 (19 – 25)	3/8 – 1/2 (10 – 13)
1 – 2-1/2 (25 – 64)	1/2 (13)

S P

1. It is essential that joints be clean and dry. Joint surfaces must be structurally sound, fully cured, and free of all loose aggregate, paint, oil, grease, asphalt, wax, mastic compounds, waterproofing compounds, form-release materials, curing compounds or any other contaminants.

NEW CONCRETE

Remove all loose material from joints by wire brushing. Sandblast surfaces in contact with form-release agents. Fresh concrete must be fully cured. Laitance must be removed by abrading.

OLD CONCRETE

For previously sealed joints, remove all old material by mechanical means. If joint surfaces have absorbed oils, remove sufficient concrete to ensure a clean surface.

P

1. Joint surfaces must be primed with Primer 733 (see Form No. 1017962) before sealing. If the surfaces are other than masonry or concrete, test first to determine adhesion. Technical assistance is available from BASF.

2. For immersion applications, Primer 733 must be used.

3. Apply primer in a thin, uniform film. Avoid buildup of film.

4. Allow approximately 15 – 30 minutes drying time before applying sealant. (Primer should be tack free.) Sealant must be applied same day as primer.

5. To minimize contamination of adjacent surfaces, apply masking tape and remove before sealant has begun to thicken and set.

M

1. SL 2™ is a three-component system and must be thoroughly mixed before use. The oversize base container allows for the addition and mixing of Part B and Sonolastic® color pigment into Part A.

NOTE: Sonolastic® color paks are not added to pretinted SL 2™.

2. 1-1/2 gallon (5.67 L) unit: (1) Transfer Part B to Part A container by cutting open Part B pouch and squeezing out contents. It is imperative that the entire contents of Part B be combined with Part A. (2) With a slow-speed drill and a sealant mixing paddle, thoroughly mix 2 – 3 minutes. The paddle blade must be kept below the surface of the sealant to avoid whipping in air. (3) Transfer the contents of the Sonolastic® pigment can into the mixed Part A and B. Use a spatula or knife, removing the entire contents to ensure consistent color. (4) Continue mixing with a slow-speed drill and sealant paddle until color is uniform. During the process, scrape the sides and bottom of the Part A container can and the paddle itself several times.

3. 3 gallon (11.37 L) unit: Use 2 Part B and 2 Sonolastic® pigment containers for each Part A container. Mix as instructed under 1-1/2 gallon (5.7 L) unit.

4. Pot life of the sealant is dependent upon temperature. See Table 2 for specific data.

TABLE 2

W T

	STANDARD CONDITIONS 73° F (23° C)	COLDER TEMPERATURES 40° F (4° C)
No accelerator	1-1/2 – 2 hrs	4-1/2 – 5-1/2 hrs
1 accelerator	30 – 45 min	1-1/2 – 2 hrs
2 accelerators	30 – 45 min	1-1/2 – 2 hrs
3 accelerators	—	45 min – 1 hr

A

1. All caulking and sealing should be performed when temperatures are above 40° F (4° C); any moisture or frost on surfaces will adversely affect adhesion.

2. Fill joints from the bottom; avoid bridging of the joint, which may form air voids.

3. For large joints, the self-leveling grade may be poured directly from the can.

4. For smaller joints and for all slope-grade applications, fill the joint by flowing the sealant from a bulk-loading gun.

5. Light tooling of the slope-grade sealant is recommended to smooth out ripples. On sloped surfaces, tool from the lowest point to the highest. Do not use soap or solvent.

C U

1. Immediately after use and before sealant has cured, clean equipment with Reducer 990 or xylene.

2. The cured sealant may be removed by cutting with a sharp-edged tool, thin films by abrading.

C

Cure time will vary with humidity and temperature. Initial cure is within 24 hours and complete cure takes approximately 7 days. Allow 14 day cure at 70˚ F (23˚ C) prior to water immersion. Cure rates are dependent on temperature and humidity. Protect joint from dirt and traffic until cured.

F P

- Do not allow SL 2™ sealants to come into contact with alcohol-based materials or solvents.
- Do not apply polyurethane sealants in the vicinity of uncured silicone sealants or uncured Sonolastic® 150 with VLM Technology or 150 Tint Base.
- When SL 2™ is to be used in areas subject to continuous water immersion, cure for 14 days at 70˚ F (23˚ C). Allow longer cure time at lower temperatures. Always use Primer 733.
- Do not use in swimming pools, or other submerged conditions where the sealant will be exposed to strong oxidizers. Avoid submerged conditions where water temperatures will exceed 120˚ F (58˚ C).
- For slopes up to 12% use SL 2™ Slope Grade. For slopes over 12% use NP 2™ sealant (see Form No. 1017911).
- Backer-rods, joint fillers, or bondbreakers must be tight to the sides of the joint to prevent loss of sealant through the bottom.
- For joints subject to puncture by high heels or umbrella points, a stiffer or higher density backup material is required. Cork or rigid nonimpregnated cane-fiber joint fillers are suitable. Separate materials from the sealant by a nonadhering bondbreaker (polyethylene tape).
- Do not use other caulks or sand as a bottom bed in a joint.
- Do not install when rain is expected before the sealant reaches initial cure (about 12 hours).
- Units of SL 2™ are premeasured; do not use partial units.
- SL 2™ may yellow in the presence of unvented artificial heat; this is a surface phenomenon that does not affect sealant performance.
- Use only Sonolastic® color packs intended for use with SL 2™.
- Make certain the most current versions of product data sheet and MSDS are being used; call Customer Service (1-800-433-9517) to verify the most current version.
- Proper application is the responsibility of the user. Field visits by BASF personnel are for the purpose of making technical recommendations only and not for supervising or providing quality control on the jobsite.

H S

SL 2™ PART A

W

SL 2™ Part A contains toluene, diisocyanate; silica, crystalline quartz; mineral spirits (Stoddard type).

R

Combustible liquid and vapor. May cause skin and eye irritation. Inhalation of vapors may cause irritation and intoxication with headaches, dizziness and nausea. May cause dermatitis and allergic responses. Potential skin and/or respiratory sensitizer. Ingestion may cause irritation. Reports associate repeated or prolonged occupational overexposure to solvents with permanent brain, nervous system, liver and kidney damage. Contains crystalline silica. NTP and IARC recognize crystalline silica as a human carcinogen. The exposure to crystalline silica during the normal use of this product will be little or none. INTENTIONAL MISUSE BY DELIBERATELY INHALING THE CONTENTS MAY BE HARMFUL OR FATAL.

P

KEEP OUT OF THE REACH OF CHILDREN. KEEP AWAY FROM HEAT, FLAME AND SOURCES OF IGNITION. Keep container closed when not in use. Prevent contact with skin, eyes and clothing. Wash thoroughly after handling. DO NOT take internally. Use only with adequate ventilation. Use impervious gloves, eye protection and if the TLV is exceeded or product is used in a poorly ventilated area, use NIOSH/MSHA approved respiratory protection in accordance with applicable federal, state and local regulations. Empty container may contain explosive vapors or hazardous residues. All label warnings must be observed until container is commercially cleaned or reconditioned.

F A

In case of eye contact, flush thoroughly with water for at least 15 minutes. SEEK IMMEDIATE MEDICAL ATTENTION. In case of skin contact, wash affected areas with soap and water. If irritation persists, SEEK MEDICAL ATTENTION. Remove and wash contaminated clothing. If inhalation causes physical discomfort, remove to fresh air. If discomfort persists or any breathing difficulty occurs, or if swallowed, SEEK IMMEDIATE MEDICAL ATTENTION.

Refer to Material Safety Data Sheet (MSDS) for further information.

P 65

This product contains material listed by the state of California as known to cause cancer, birth defects, or other reproductive harm.

OC C

Less than 64.4 g/L or 0.54 lbs/gal, less water and exempt solvents, when products are mixed.

SL 2™ PART B

W

SL 2™ Part B contains toluene diisocyanate mix.

R

May cause eye, skin or respiratory irritation. May cause dermatitis and allergic reactions. Potential skin and/or respiratory sensitizer. Ingestion may cause irritation.

P

KEEP OUT OF THE REACH OF CHILDREN. Prevent contact with skin, eyes or clothing. Wash thoroughly after handling. DO NOT take internally. Ingestion may cause irritation. Use only with adequate ventilation. Keep container closed. Inhalation may cause irritation. Use impervious gloves, eye protection and if the TLV is exceeded or used in a poorly ventilated area, use NIOSH/MSHA approved respiratory protection in accordance with applicable federal, state and local regulations.

F A

In case of eye contact, flush thoroughly with water for at least 15 minutes. SEEK IMMEDIATE MEDICAL ATTENTION. In case of skin contact, wash affected areas with soap and water. If irritation persists, SEEK MEDICAL ATTENTION. Remove and wash contaminated clothing. If inhalation causes physical discomfort, remove to fresh air. If discomfort persists or any breathing difficulty occurs or if swallowed, SEEK IMMEDIATE MEDICAL ATTENTION.

Refer to Material Safety Data Sheet (MSDS) for further information.

P 65

This product contains materials listed by the state of California as known to cause cancer, birth defects, or other reproductive harm.

OC C

When mixed, product contains less than 64.4 g/L or 0.54 lbs/gal, less water and exempt solvents.

SL 2™ ACCELERATOR

C

SL 2™ Accelerator contains 2-ethylhexanoic acid.

R

May cause skin, eye or respiratory irritation. May cause dermatitis and allergic reactions. Ingestion may cause irritation.

P

KEEP OUT OF THE REACH OF CHILDREN. Prevent contact with skin, eyes and clothing. Wash thoroughly after handling. DO NOT take internally. Use only with adequate ventilation. Inhalation may cause irritation. Keep container closed. Use impervious gloves, eye protection and if the TLV is exceeded or used in a poorly ventilated area, use NIOSH/MSHA approved respiratory protection in accordance with applicable federal, state and local regulations.

F A

In case of eye contact, flush thoroughly with water for at least 15 minutes. SEEK IMMEDIATE MEDICAL ATTENTION. In case of skin contact, wash affected areas with soap and water. If irritation persists, SEEK MEDICAL ATTENTION. Remove and wash contaminated clothing. If inhalation causes physical discomfort, remove to fresh air. If discomfort persists or any breathing difficulty occurs or if swallowed, SEEK IMMEDIATE MEDICAL ATTENTION.

Refer to Material Safety Data Sheet (MSDS) for further information.

P 65

This product does not knowingly contain materials which are known to the state of California to cause cancer, birth defects, or other reproductive harm.

OC C

0 lbs/gal or 0 g/L, less water and exempt solvents.

F ,
CT (18004249300)

BASF Construction Chemicals, LLC – Building Systems

889 Valley Park Drive
Shakopee, MN, 55379

www.BuildingSystems.BASF.com

Customer Service 800-433-9517
Technical Service 800-243-6739

LIMITED WARRANTY NOTICE Every reasonable effort is made to apply BASF exacting standards both in the manufacture of our products and in the information which we issue concerning these products and their use. We warrant our products to be of good quality and will replace or, at our election, refund the purchase price of any products proved defective. Satisfactory results depend not only upon quality products, but also upon many factors beyond our control. Therefore, except for such replacement or refund, BASF MAKES NO WARRANTY OR GUARANTEE, EXPRESS OR IMPLIED, INCLUDING WARRANTIES OF FITNESS FOR A PARTICULAR PURPOSE OR MERCHANTABILITY, RESPECTING ITS PRODUCTS, and BASF shall have no other liability with respect thereto. Any claim regarding product defect must be received in writing within one (1) year from the date of shipment. No claim will be considered without such written notice or after the specified time interval. User shall determine the suitability of the products for the intended use and assume all risks and liability in connection therewith. Any authorized change in the printed recommendations concerning the use of our products must bear the signature of the BASF Technical Manager.

This information and all further technical advice are based on BASF's present knowledge and experience. However, BASF assumes no liability for providing such information and advice including the extent to which such information and advice may relate to existing third party intellectual property rights, especially patent rights. In particular, BASF disclaims all CONDITIONS AND WARRANTIES, WHETHER EXPRESS OR IMPLIED, INCLUDING THE IMPLIED WARRANTIES OF FITNESS FOR A PARTICULAR PURPOSE OR MERCHANTABILITY. BASF SHALL NOT BE RESPONSIBLE FOR CONSEQUENTIAL, INDIRECT OR INCIDENTAL DAMAGES (INCLUDING LOSS OF PROFITS) OF ANY KIND. BASF reserves the right to make any changes according to technological progress or further developments. It is the customer's responsibility and obligation to carefully inspect and test any incoming goods. Performance of the product(s) described herein should be verified by testing and carried out only by qualified experts. It is the sole responsibility of the customer to carry out and arrange for any such testing. Reference to trade names used by other companies is neither a recommendation, nor an endorsement of any product and does not imply that similar products could not be used.

For professional use only. Not for sale to or use by the general public.

Form No. 1017903 5/09
Printed on recycled paper including 10% post-consumer fiber.

© 2009 BASF
Printed in U.S.A.

Georgia-Pacific

DensGlass® Sheathing

Technical Service Hotline 1.800.225.6119 or
www.gpgypsum.com

Manufacturer

Georgia-Pacific Gypsum LLC
133 Peachtree Street
Atlanta, GA 30303

Georgia-Pacific Canada LP
7070 Mississauga Road, Unit 120
Mississauga, ON L5M 7V9

Technical Service Hotline: 1-800-225-6119

Description

DensGlass® Sheathing is a gypsum panel made of a treated, water-resistant core, surfaced with fiberglass mats and a GOLD colored primer coating. Providing superb protection from the elements, DensGlass Sheathing is resistant to delamination and deterioration due to weather exposure—even during construction delays that last as long as twelve months after installation and are backed by a limited warranty against delamination and deterioration for up to 12 months of exposure to normal weather conditions.* DensGlass Sheathing panels are also mold-resistant, and have scored a 10, the highest level of performance for mold resistance under ASTM D 3273 test method.

DensGlass Sheathing exhibits a dimensional stability that assures resistance to warping, rippling, buckling and sagging for a flat and even substrate and is noncombustible as defined and tested in accordance with ASTM E 136. Since DensGlass Sheathing is strong in both directions, it may be installed either parallel or perpendicular to wall framing members (always follow specific assembly installation instructions).

Primary Uses

Because of the superior performance of DensGlass Sheathing, it is specified for exterior walls, ceilings and soffits in a wide variety of applications. These include exterior insulation and finish systems (EIFS); cavity brick or stone veneer applications; cladding such as wood siding, vinyl siding, composition siding, wood shingles, shakes, conventional stucco systems, plywood siding panels; and interior finish systems that require a substrate panel with superior fire and moisture resistance.

For EIFS applications, DensGlass Sheathing is an ideal substrate for adhesive or mechanical application of expanded polystyrene (EPS) or extruded polystyrene insulation, and is recommended in all climate zones.

Consult with the local building code, design professional, owner or cladding manufacturer for weather resistive barrier requirements. Manufacturers of weather resistive barriers, which include flexible membranes, self-adhered membrane and liquid applied, have found DensGlass Sheathing to be a suitable substrate for their systems.

DensGlass Sheathing is an ideal product for exterior ceilings and soffits for both cold and warm climate zones. It resists sagging, even under exceptionally humid conditions. Panels are applied directly to structural framing. Surface and joints may be finished and painted, or surfaced with an exterior finish system.

Limitations

DensGlass Sheathing is resistant to normal weather conditions, but it is not intended for immersion in water. Cascading roof/floor water should be directed away from the sheathing until appropriate drainage is installed.

Avoid any condition that will create moisture in the air and condensation on the exterior walls during periods when the exterior temperature is lower than the interior. The use of forced air heaters creates volumes of water vapor which, when not properly vented, can condense on building materials. The use of these heaters and any resulting damage is not the responsibility of Georgia-Pacific Gypsum. Consult heater manufacturer for proper use and ventilation. Vapor barrier may also restrict ventilation.

When DensGlass Sheathing panels are used in slanted wall applications, that portion of the wall must be temporarily protected from the elements by the use of a water-resistant barrier prior to application of the cladding. Do not allow water to pond or settle on sheathing. Also, exposed wall ends such as those that may be found in parapets must be covered to prevent water from infiltrating the cavity.

Georgia-Pacific Gypsum does not warrant and is not responsible or liable for the performance of the cladding or exterior systems applied over DensGlass Sheathing. The suitability and compatibility of any system is the responsibility of the system manufacturer or design authority.

Do not laminate DensGlass Sheathing to masonry surfaces; use furring strips or framing.

DensGlass Sheathing is not intended for roof applications. For roof applications, consult our DensDeck® Roof Board brochure.

DensGlass Sheathing is not intended for interior or exterior tile applications. For interior tile applications, consult our DensShield® Tile Backer brochure.

DensGlass Sheathing should not be used in lieu of plywood where required.

Do not apply DensGlass Sheathing below grade.

For all installations, design details such as fasteners, sealants and control joints per system specifications must be properly installed. Openings and penetrations must be properly flashed and sealed. Failure to do so will void the warranty.

Do not use DensGlass Sheathing as a base for nailing or mechanical fastening. Fasteners should be flush to the face of the board, not countersunk.

Technical Data

DensGlass Sheathing is noncombustible as described and tested in accordance with ASTM E 136.

DensGlass Sheathing exceeds ASTM C 1396 sheathing standards for humidified deflection by a factor of 10 in tests over the standard for regular gypsum sheathing.

5/8" (15.9 mm) DensGlass® Fireguard® Sheathing is UL and ULC classified **Type DGG.**

When tested, as manufactured, DensGlass Sheathing conforms to ASTM C 1177.

Flame spread and smoke develop rating of 0/0 when tested in accordance with ASTM E 84 or CAN/ULC S-102.

* For complete warranty details, visit www.gpgypsum.com.

continued

Submittal Approvals

Job Name _____

Contractor _____

Date _____

Stamps/Signatures

Georgia-Pacific

DensGlass® Sheathing

Technical Service Hotline 1.800.225.6119 or
www.gpgypsum.com

Product Data

Thicknesses: 1/2″ (12.7 mm); 5/8″ (15.9 mm) is Type X
Width: 4′ (1220 mm) standard, tolerance up to ± 1/8″ (3.2 mm)
Lengths: 8′ (2438 mm), 9′ (2743 mm) or 10′ (3048 mm) standard
Edges: Square

Physical Properties

Properties	1/2″ (12.7 mm) DensGlass® Sheathing	5/8″ (15.9 mm) DensGlass® Fireguard® Sheathing
Width, nominal	4′ (1219 mm) ± 1/8″ (3 mm)	4′ (1219 mm) ± 1/8″ (3 mm)
Length, standard	8′ (2440 mm), 9′ (2743 mm), 10′ (3048 mm), ± 1/4″ (6 mm)	8′ (2440 mm), 9′ (2743 mm), 10′ (3048 mm), ± 1/4″ (6 mm)
Weight, nominal, lbs./sq. ft. (Kg/m^2)	1.9 (9)	2.5 (12)
Bending radius	6′ (1829 mm)[5]	8′ (2438 mm)[5]
Racking strength[6], lbs./ft. (dry) (N/m), Ultimate–not design value	>540 (>7878)	>654 (>9544)
Flexural strength[1], parallel, lbf. (N), 4′ weak direction	≥80[6] (356)	≥100 (445)
Compressive strength	min. 500 psi (3445 kPa)	min. 500 psi (3445 kPa)
Humidified deflection[1, 4]	2/8″ (6 mm)	1/8″ (3 mm)
Permeance[2], Perms (ng/Pa•s•m^2)	>23 (1300)	>17 (970)
R Value[3], ft^2•°F•hr/BTU (m^2•K/W)	.56 (0.099)	.67 (0.118)
Combustibility[7]	Noncombustible	Noncombustible
Linear expansion with moisture change, in/in %RH (mm/mm %RH)	6.25 x 10^{-6}	6.25 x 10^{-6}
Surface burning characteristics per ASTM E 84 or CAN/ULC-S102: flame spread/smoke developed	0/0	0/0
Coefficient of thermal expansion, in/in/°F (mm/mm/°C)	8.5 x 10^{-6} (15.3 x 10^{-6})	8.5 x 10^{-6} (15.3 x 10^{-6})

[1] Tested in accordance with ASTM C 473
[2] Tested in accordance with ASTM E 96 (dry cup method)
[3] Tested in accordance with ASTM C 518 (heat flow meter)
[4] Specified values per ASTM C 1177
[5] Double fasteners on ends as needed
[6] Tested in accordance with ASTM E 72
[7] As defined and tested in accordance with ASTM E 136

Georgia-Pacific Gypsum

U.S.A.– Georgia-Pacific Gypsum LLC
Canada – Georgia-Pacific Canada LP

SALES INFORMATION AND ORDER PLACEMENT

U.S.A. Midwest: **1-800-876-4746** West: **1-800-824-7503**
South: **1-800-327-2344** Northeast: **1-800-947-4497**

CANADA Canada Toll Free: **1-800-387-6823**
Quebec Toll Free: **1-800-361-0486**

TECHNICAL INFORMATION

U.S.A. and Canada: **1-800-225-6119**
www.gpgypsum.com

©2010 Georgia-Pacific Gypsum LLC. All rights reserved. Printed in the U.S.A. on 10% post-consumer recycled stock. 12/10. GP-TM Lit. Item #532250.

TRADEMARKS Unless otherwise noted, all trademarks are owned by or licensed to Georgia-Pacific Gypsum LLC.

WARRANTIES, REMEDIES AND TERMS OF SALE For current warranty information for this product, please go to www.gpgypsum.com and select the product for warranty information. All sales of this product by Georgia-Pacific are subject to our Terms of Sale available at www.gpgypsum.com.

UPDATES AND CURRENT INFORMATION The information in this document may change without notice. Visit our website at www.gpgypsum.com for updates and current information.

CAUTION For product fire, safety and use information, go to www.gp.com/safetyinfo or call 1-800-225-6119.

HANDLING AND USE–CAUTION This product contains fiberglass facings which may cause skin irritation. Dust and fibers produced during the handling and installation of the product may cause skin, eye and respiratory tract irritation. Avoid breathing dust and minimize contact with skin and eyes. Wear long sleeve shirts, long pants and eye protection. Always maintain adequate ventilation. Use a dust mask or NIOSH/MSHA approved respirator as appropriate in dusty or poorly ventilated areas.

FIRE SAFETY CAUTION Passing a fire test in a controlled laboratory setting and/or certifying or labeling a product as having a one-hour, two-hour, or any other fire resistance or protection rating and, therefore, as acceptable for use in certain fire rated assemblies/systems, does not mean that either a particular assembly/system incorporating the product, or any given piece of the product itself, will necessarily provide one-hour fire resistance, two-hour fire resistance, or any other specified fire resistance or protection in an actual fire. In the event of an actual fire, you should immediately take any and all actions necessary for your safety and the safety of others without regard for any fire rating of any product or assembly/system.

Three Great Steel Panels

Residential Applications
Agricultural Applications
Commercial Applications
Through Fastened Panel
Hidden Fastener Panel
Color Matched Soffit
Color Matched Gutter
Color Matched Vents
Color Matched Trim

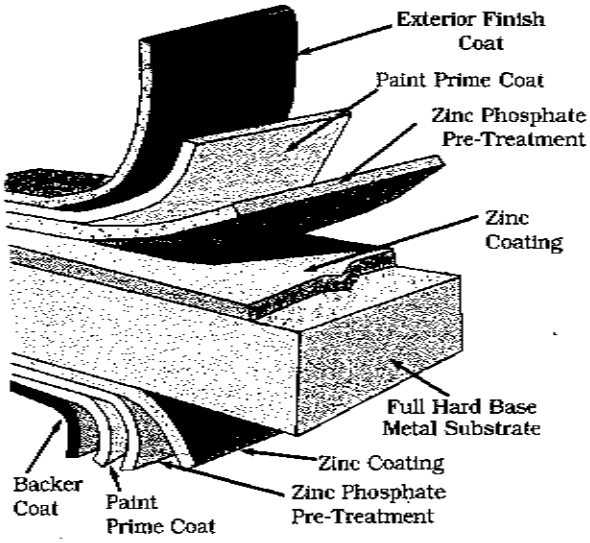

Available in 24 Panel Colors
20 Trim Colors Available
Zinc Phosphate Pre-Treatment
Structural Strength ASTM-A653
Grade 80 (Full Hard Steel)
82,000 PSI Min. Tensile Strength
UL 2218 Class 4 Hail Resistance
UL 790 Class A Fire Resistance
UL 580 Class 90 Wind Uplift

For complete details on Underwriters Laboratory Product Certification's see www.ul.com

PRO-RIB

Pro-Rib is the leading steel panel in the post frame industry offered at competitive prices and is comparable with nearly all of the standard panels on the market today. Pro-Rib is also increasing its usage in the residential and light commercial markets.

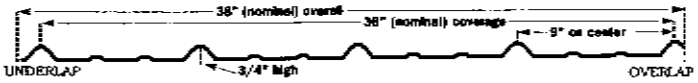

Actual .0142" minimum thickness before painting.
.0165" nominal thickness after painting.
G-60 Galvanized Coating plus Zinc Phosphate.
25 Year Paint Warranty.

PREMIUM PRO-RIB

Premium Pro-Rib is one of the most versatile members of the Pro-Rib family of quality products. It is truly a premium wall and roof panel whose applications span a tremendous variety of residential, commercial, and industrial construction projects. The superior performance of the ***Premium Paint System*** sets this panel apart from the crowd.

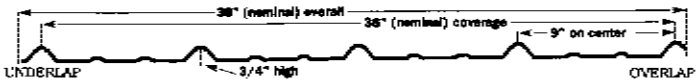

Actual .0157" minimum thickness before painting.
.018" nominal thickness after painting.
G-90 Galvanized Coating plus Zinc Phosphate.
30 Year Paint Warranty.

PREMIUM PRO-SNAP

Premium Pro-Snap is an excellent choice for your residential or light commercial applications. Premium Pro-Snap is an economical, snap together, concealed fastener roofing panel. Premium Pro-Snap offers ease of installation, longevity, energy savings, and exceptional durability. The superior performance of the ***Premium Paint System*** sets this steel roofing panel apart from the crowd.

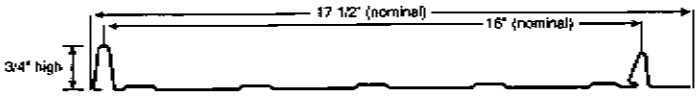

Actual .0157" minimum thickness before painting.
.018" nominal thickness after painting.
G-90 Galvanized Coating plus Zinc Phosphate.
30 Year Paint Warranty.

PREMIUM PRO-RIB®

The eye catching appeal of the Premium Pro-rib® is making the difference between ordinary and outstanding, basic and brilliant, on structures around the world.

Premium Offers:

- Superior resistance to ultraviolet radiation
- Hard flexible finish for long term weatherability
- 9" on center rib spacing
- Actual .0157 minimum thickness before painting
  .018 nominal thickness after painting
- G90 Galvanized coating plus Zinc Phosphate
- Available in 24 colors
- 30 year film integrity warranty
- 10 year red rust warranty
- Custom cut lengths from 1" to over 40'
- Manufactured to the highest standards in the industry.
- Structural Strength ASTM-A653 Grade 80 Steel
- Panels are full hard with structural qualities of a minimum 82,000 PSI tensile strength.
- 36" nominal coverage

.018 Panel	SKU #
Ash Gray	155-9107
Beige	155-9411
Black	155-9330
Brite White	155-8991
Brite Red	155-9042
Brown	155-9013
Burgundy	155-9398
Burnished Slate	155-9071
Ch. Gray	155-9246
Colonial Red	155-9055
Dark Blue	155-9301
Emerald Green	155-9275
Forest Green	155-9123
Ivory	155-9152
Lt. Gray	155-9181
Ocean Blue	155-9149
Patina Green	155-9165
Pinewood	155-9408
Prairie Wheat	155-9136
Red	155-9039
Slate Blue	155-9217
Tan	155-9068
Teal	155-9194
White	155-9000

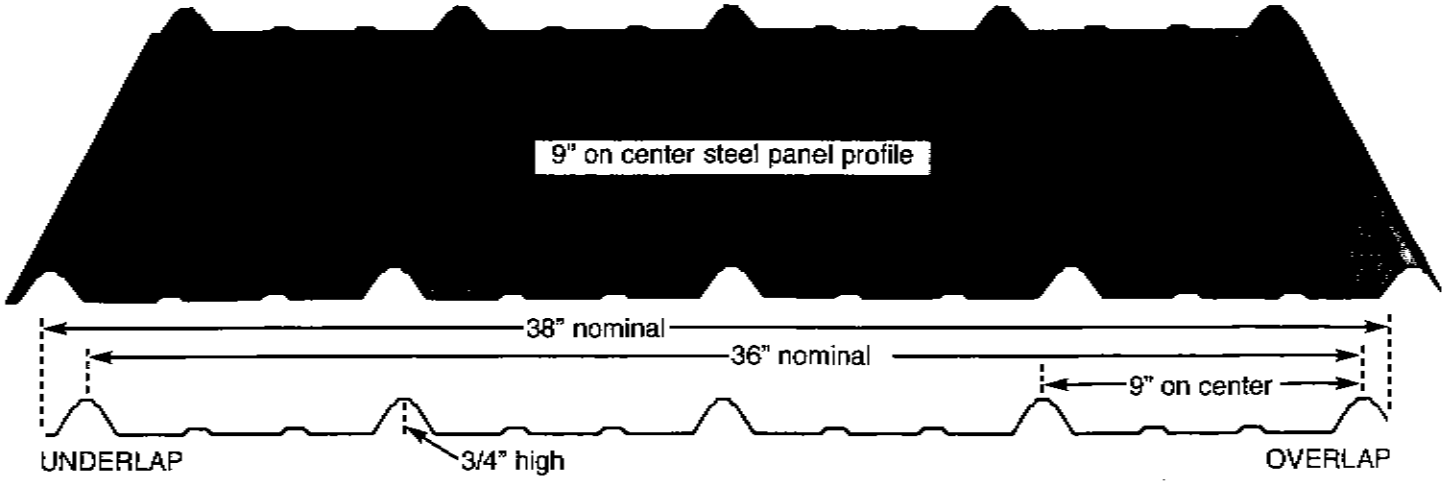

PREMIUM PRO-SNAP®

The eye catching appeal of the Premium Pro- Snap® is making the difference between ordinary and outstanding, basic and brilliant, on structures around the world.

Premium Offers:

- Superior resistance to ultraviolet radiation
- Hard flexible finish for long term weatherability
- 16" on center rib spacing
- Actual .0157 minimum thickness before painting
  .018 nominal thickness after painting
- G90 Galvanized coating plus Zinc Phosphate
- Available in 24 colors
- 30 year film integrity warranty
- 10 year red rust warranty
- Custom cut 4' to 30'; inquire for longer lengths.
- Manufactured to the highest standards in the industry.
- Structural Strength ASTM-A653 Grade 80 Steel
- Panels are full hard with structural qualities of a minimum 82,000 PSI tensile strength.
- 16" nominal coverage
- Designed to install over solid roof deck

Pro-Snap®	SKU #
Ash Gray	155-9801
Beige	155-9797
Black	155-9785
Brite White	155-9725
Brite Red	155-9729
Brown	155-9745
Burgundy	155-9789
Burnish Slate	155-9737
Ch. Gray	155-9773
Colonial Red	155-9733
Dark Blue	155-9781
Em. Green	155-9777
Forest Green	155-9757
Ivory	155-9761
Lt. Gray	155-9765
Ocean Blue	155-9809
Patina Green	155-9813
Pinewood	155-9793
Prairie Wheat	155-9805
Red	155-9749
Slate Blue	155-9769
Tan	155-9753
Teal	155-9817
White	155-9741

Pro-Snap® One Hundred Square Foot Calculation

Length	96"
Number of Pieces	x 20
Equals	1920
One Hundred Square Foot Conversion	x .001215*
Equals	2.3328 SQ

*The one hundred square foot conversion factor is based on the overall formed width of the panel. Pro-Snap® 17-1/2" inch panel.

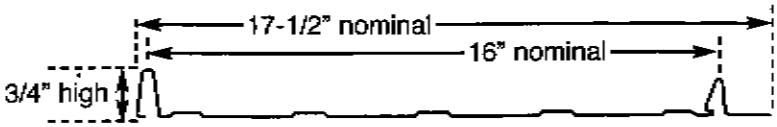

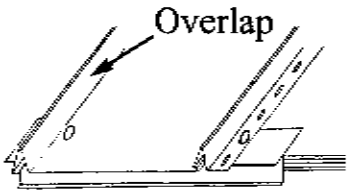

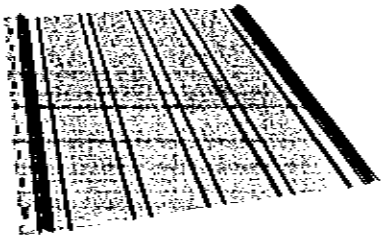

SYSTEM 30

PREMIUM

PRO-RIB®

SYSTEM 30

PREMIUM PRO- RIB® SYSTEM 30

Film Integrity: Paint film integrity is warranted for a period of 30 years. Premium Pro-Rib® will not crack, flake, chip or peel (not to be construed to include slight hairline cracking which occurs during fabrication) for a period of 30 years. Distance from salt water environment must exceed 2000 meters for warranty to apply.

Chalk Rating: Will not chalk in excess of number 8 rating during years 1 through 25 on vertical installations; and will not chalk in excess of number 6 rating during years 1 through 25 on non-vertical installations. This is determined by the procedure outlined in ASTM D-4214-89 (Method A) specifications test. Distance from salt water environment must exceed 2000 meters for warranty to apply.

Fade Rating: Will not fade in excess of 5 NBS (Hunter) Units during years 1 through 25 on vertical installations; and will not fade in excess of 7 NBS (Hunter) Units during years 1 through 25 on non-vertical installations. This is determined by the procedure outlined in ASTM D-2244-85 and ASTM D-3964-80 (1985). Distance from salt water environment must exceed 2000 meters for warranty to apply.

For specific guidelines refer to Akzo Nobel's Ceram-A-Star 950 limited warranty.

SYSTEM 30

PREMIUM

PRO-SNAP®

SYSTEM 30

PREMIUM PRO-SNAP® SYSTEM 30

Film Integrity: Paint film integrity is warranted for a period of 30 years. Premium Pro-Snap® will not crack, flake, chip or peel (not to be construed to include slight hairline cracking which occurs during fabrication) for a period of 30 years. Distance from salt water environment must exceed 2000 meters for warranty to apply.

Chalk Rating: Will not chalk in excess of number 8 rating during years 1 through 25 on vertical installations; and will not chalk in excess of number 6 rating during years 1 through 25 on non-vertical installations. This is determined by the procedure outlined in ASTM D-4214-89 (Method A) specifications test. Distance from salt water environment must exceed 2000 meters for warranty to apply.

Fade Rating: Will not fade in excess of 5 NBS (Hunter) Units during years 1 through 25 on vertical installations; and will not fade in excess of 7 NBS (Hunter) Units during years 1 through 25 on non-vertical installations. This is determined by the procedure outlined in ASTM D-2244-85 and ASTM D-3964-80 (1985). Distance from salt water environment must exceed 2000 meters for warranty to apply.

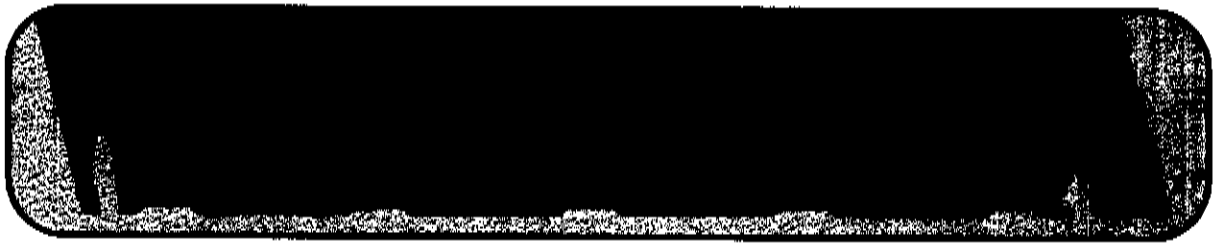

For specific guidelines refer to Akzo Nobel's Ceram-A-Star 950 limited warranty.

PROFILE VENTS

PROFILE VENTS GIVE YOU THESE ADVANTAGES:

- 40 Year Limited Warranty
- Matches Pro-Rib®/ Pro-Snap® Configurations
- Fits under any ridgecap, any pitch 2/12 to 20/12
- Saves Time, Energy, and Money
- Virtually Unbreakable-Won't Crack, Dent, Rust
- Provides Ventilation, Won't Clog
- Prevents Snow & Insect Infiltration
- Won't Scratch Panel Finish
- Lightweight; Quick, Easy Installation
- Glue spots Prevent Slipping during Installation
- Meets All Model Building Codes
- 17 Sq In per lineal ft. Ridge
- 100 mph wind driven rain with no leakage

**** Two 10 ft. pieces per roll***
**** One roll covers 10 ft. ridgecap***

	Special Order
Pro-Rib® **(Two 10'Lengths)**	SKU# 155-8548
Pro-Snap® **(Two 10' Lengths)**	SKU# 155-9858

CLOSURE STRIPS

- Die cut to match Pro-Rib®/Pro-Snap® panels.
- Each closure has an adhesive strip for fast installation.
- Dove tailed ends to eliminate gaps.
- Closed cells will not absorb moisture.
- Inside closure strips are used under the panel (i.e. eaves).
- Outside closure strips are used on top of the panel (i.e. ridge).

	Special Order	Stock
Pro-Rib® Inside Closure-4 pack	SKU# 155-8616	SKU# 155-8577
Pro-Rib® Outside Closure-4 pack	SKU# 155-8603	SKU# 155-8580
Pro-Rib® Vented Closure-4 pack	SKU# 155-8593	
Pro-Snap® Outside Closure-8 pack	SKU# 155-9862	

Each pack is .16 lbs.

Can be Direct Shipped. See Page 45 for pricing information.

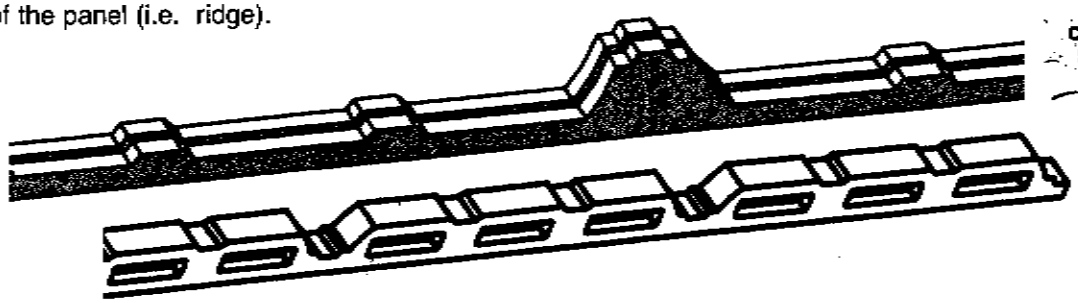

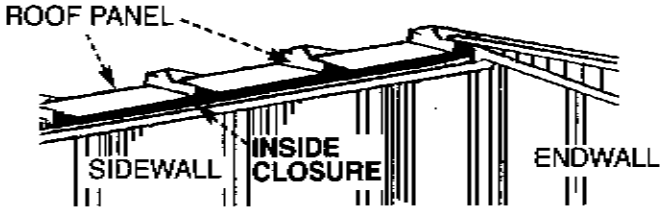

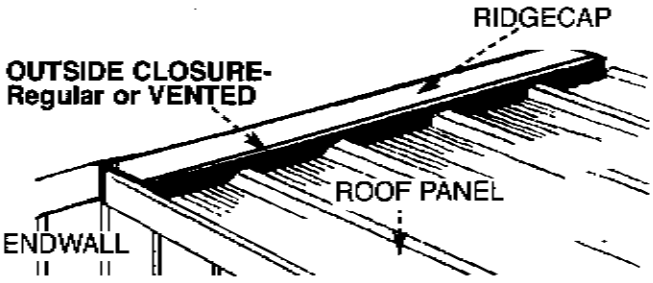

OUTSIDE CLOSURE; PRO-SNAP® CONFIGURATION

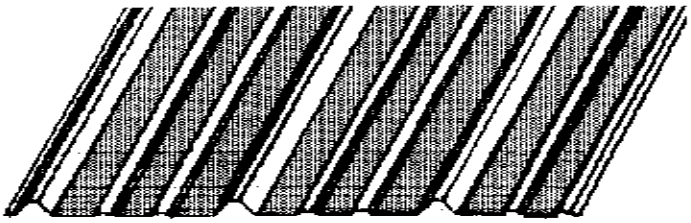

WHITE FIBERGLASS

- Same configuration as Pro-Rib® panels. • 36" coverage.
- Translucent 5 oz. fiberglass panels, 60% transmittance.

	Special Order	Stock
(3' lengths)	SKU# 155-8483	****
(4' lengths)	SKU# 155-8496	****
(7' lengths)	SKU# 155-8920	SKU# 155-8519
(9' lengths)	SKU# 155-8933	SKU# 155-8522
(11' lengths)	SKU# 155-8946	SKU# 155-8535

PREMIUM PRO-SKY

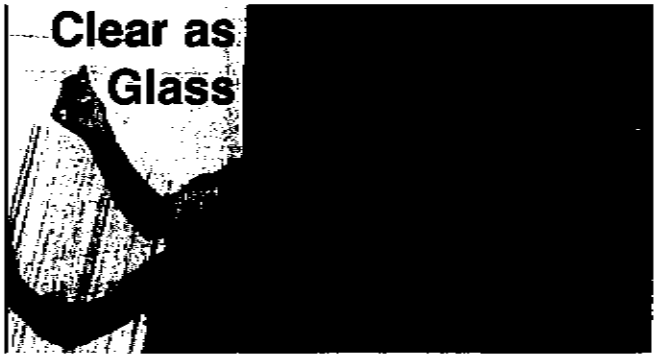

CLEAR POLYCARBONATE

Special Order	(3' lengths)	SKU# 155-8739
Special Order	(4' lengths)	SKU# 155-8742
Special Order	(7' lengths)	SKU# 155-8755
Special Order	(9' lengths)	SKU# 155-8768
Special Order	(11' lengths)	SKU# 155-8771

- Same configuration as Pro-Rib® panels.
- Polycarbonate • 36" coverage
- 20 Times Stronger than 5 oz. fiberglass
- Highest light transmission
- Class "A" Fire Rating
- 10 Year Limited Warranty

TOUCH-UP PAINT

Available in All Colors

Size	Weight	Sku #
1 oz.	.125 lbs	156-7869
1 Quart	5 lbs	156-7872
1 Gallon	20 lbs	156-7885

- Perfect for scratches and nicks.
- Color matched to all 24 panel colors.
- Quarts and 1 oz. bottle in stock for Prompt Shipment.
- The beveled brush makes it simple to paint tiny spots or thin lines.
- Quarts and gallons available for color matching other components of your building. (Please allow 4 weeks for delivery of gallons.)

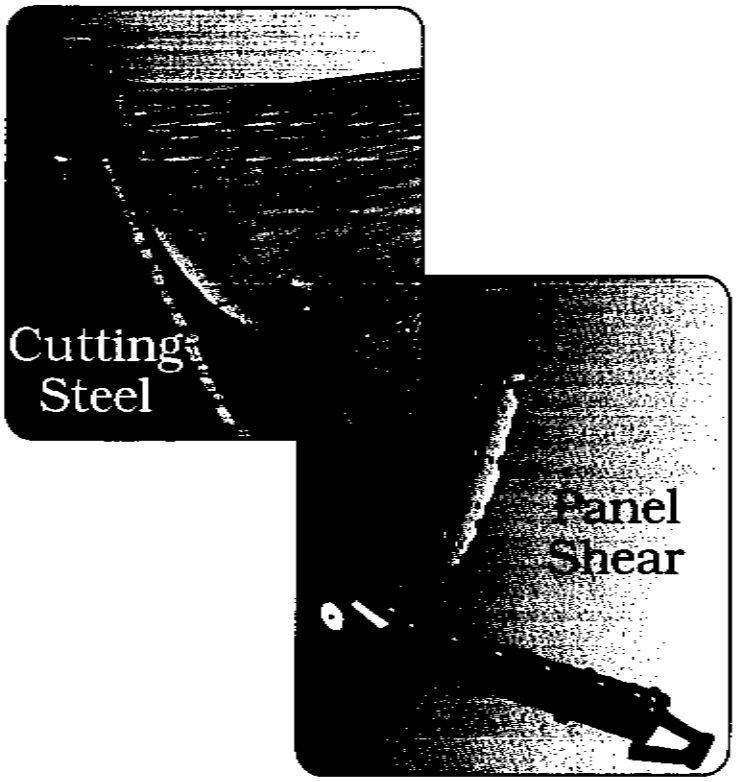

PORTABLE PANEL SHEAR

- Custom contoured blades to fit PRO-RIB™ steel panels.
- Unique frame design allows blade sets to be replaced at a fraction of the cost of a new shear.
- Straight cut, 3/12 cut, or 4/12 cut blade sets can be mounted on the same frame quickly & easily.
- Long lasting high carbon metal blades give a quick, clean and easy cut.
- Does not produce hot metal filings that can damage the finish of the panel like other methods may.

SIZE AVAILABLE:

Shear with straight Blades	SKU # 155-8629
Shear with 3/12 Blades	SKU # 155-8632
Shear with 4/12 Blades	SKU # 155-8645
Additional straight Blades	SKU # 155-8687
Additional 3/12 Blades	SKU # 155-8690
Additional 4/12 Blades	SKU # 155-8700

PORTABLE SOFFIT SHEAR

- Unique frame design allows blade sets to be replaced at a fraction of the cost of new shear.
- Long lasting high carbon metal blades give a quick, clean, and easy cut.
- Does not produce hot metal filings that can damage the finish of the panel like other methods may.

SIZE AVAILABLE:

Soffit Shear with Blades	SKU # 155-8658
Replacement Soffit Blades	SKU # 155-8713

SHIPPER/PACKER LIST

SPECIALTY SYSTEMS, INC.
11901 Riverwood Drive
Burnsville, MN 55337
(952) 894-5111

Date Required: _____

Date Shipped: _____

Shipped To: Menards	Job #	Work Order #
Address:	Job Name: Menards Prototype 5	
	Menards P.O. GO	
	Matt Black & Sherwood Green	
Attn:	Entry & Exists	

Qty Ordered	Qty Shipped	Part	Inventory #	Description
5		M1		C-Channel with a 9½" face
3		MR1		Radius C-Channel with a 9½" face
2		S1		C-Channel with a 9" face
2		SR1		Radius C-Channel with a 9" face
4		W1		L-Shape with a 6" face
4		WR1		Radius L-Shape with a 6" face
2		WR2		Radius L-Shape with a 6" face
8		M1		Green Splice Plates
4		S1		Green Splice Plates
10		W1		Black Splice Plates
1				Green Touch up paint
1				Black Touch up paint
2				Pages of fab sheets

Date 6-16-10
By: SPECIALTY_SYSTEMS_INC.

Job Name MENARDS_PROTYPE_5
SHERWOOD_GREEN_ENTRY&EXISTS

Material: "Sherwood Green"

Gauge: .050 Alum.

Quantity	S.O.	SHT. QTY.
5	10 3/8" X 120"	1.25

Part M-1

ALL BENDS ARE 90°

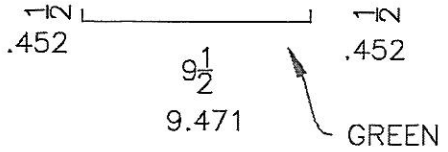

INCLUDE 8 INTERIOR SPLICE PLATES .040 ALUM. PAINTED 4 3/8" WIDE

7 / A17

P.R.

Quantity	S.O.	SHT. QTY.
3	10 3/8" X 120"	

Part MR-1

ALL BENDS ARE 90°

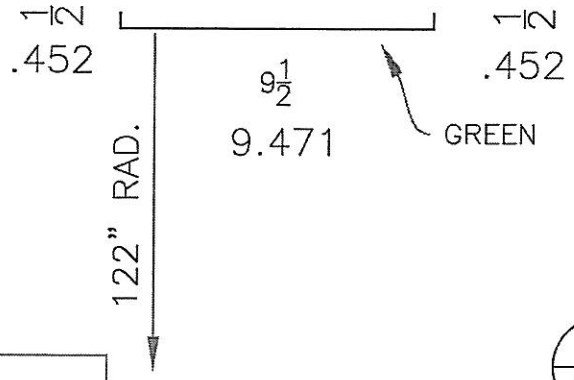

7 / A17

P.R.

Quantity	S.O.	SHT. QTY.
2	9 7/8" X 120"	

Part S-1

ALL BENDS ARE 90°

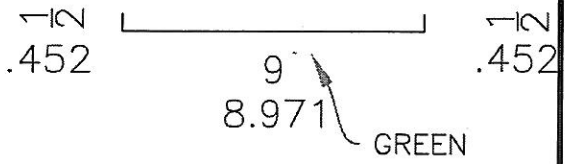

INCLUDE 4 INTERIOR SPLICE PLATES .040 ALUM. PAINTED 4 3/8" WIDE

4 / A13

P.R.

Quantity	S.O.	SHT. QTY.
2	9 7/8" X 120"	

Part SR-1

ALL BENDS ARE 90°

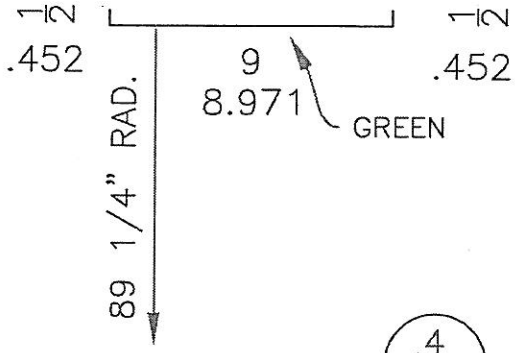

4 / A13

P.R.

Quantity	S.O.	SHT. QTY.

Part

P.R.

Quantity	S.O.	SHT. QTY.

Part

P.R.

Date 6-16-10
By: SPECIALTY_SYSTEMS_INC.

Job Name MENARDS_PROTYPE_5
MATT_BLACK_ENTRY&EXITS

Material: MATTE BLACK

Gauge:.063 Alum.

Quantity	S.O.	SHT. QTY.
4	6 1/2" X 120"	–

Part: W-1

ALL BENDS ARE 90°

ENTRANCE: 3
EXIT: 1

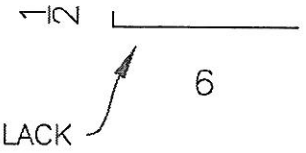

INCLUDE 5 INTERIOR SPLICE PLATES .040 ALUM. PAINTED 4 3/8" WIDE

4/A13 1/A14

P.R.

Quantity	S.O.	SHT. QTY.
4	6 1/2" X 120"	–

Part: WR-1

ALL BENDS ARE 90°

ENTRANCE

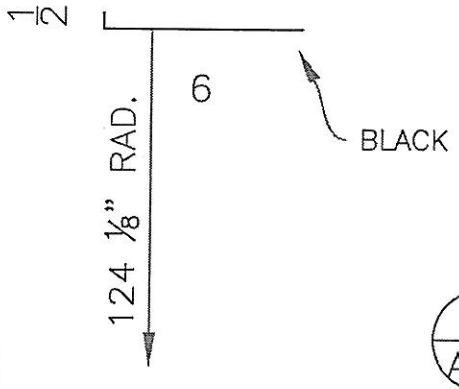

1/A14

P.R.

Quantity	S.O.	SHT. QTY.
2	6 1/2" X 120"	–

Part: WR-2

ALL BENDS ARE 90°

EXIT

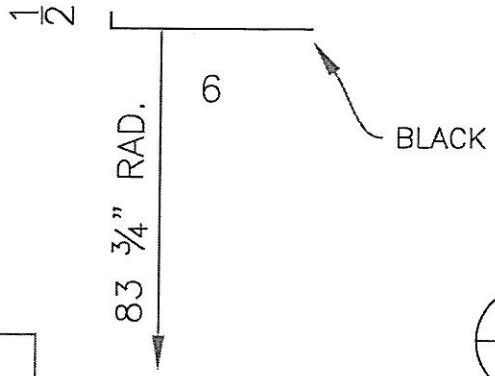

4/A13

P.R.

Quantity	S.O.	SHT. QTY.

Part

P.R.

Quantity	S.O.	SHT. QTY.

Part

P.R.

Quantity	S.O.	SHT. QTY.

Part

P.R.

Date 6-16-10
By: SPECIALTY_SYSTEMS_INC.

Job Name MENARDS_GATE_CANOPY

Material: "Sherwood Green"

Gauge: .050 Alum.

Quantity	S.O.	SHT. QTY.
8	3 3/8" X 60"	1.25

Part G-1

ALL BENDS ARE 90°

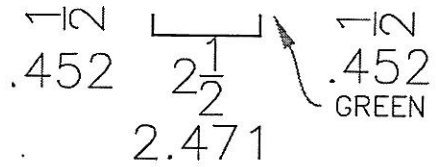

INCLUDE 10 INTERIOR SPLICE PLATES .040 ALUM. PAINTED 4 3/8" WIDE

P.R.

7 / G4

Quantity	S.O.	SHT. QTY.
2	3 3/8" X 70"	.2

Part GR-1

ALL BENDS ARE 90°

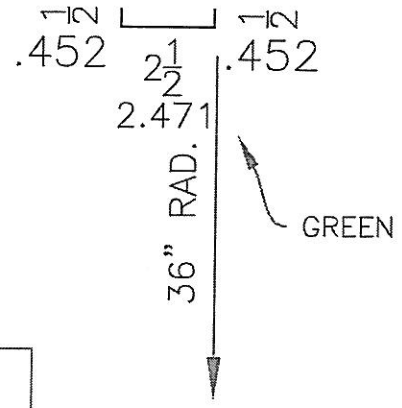

P.R.

7 / G4

Quantity	S.O.	SHT. QTY.
2	4 1/2" X 48"	

Part G-3

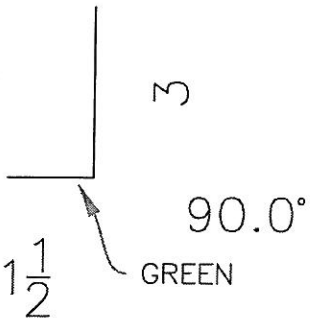

P.R.

6 / G3

Quantity	S.O.	SHT. QTY.

Part

P.R.

Quantity	S.O.	SHT. QTY.

Part

P.R.

Quantity	S.O.	SHT. QTY.

Part

P.R.

SUBMITTAL: MODEL TM FLUSH ACCESS PANELS

Qty	A Model Size	B Outside Frame Dimensions		C Wall Opening Dimensions		Approx. Ship Wt. in lbs	Latch(es)
	Width X Ht	Width	Height	Width	Height		
_	**6" x 6"**	8"	8"	6 3/8"	6 3/8"	4	1
_	**8" x 8"**	10"	10"	8 3/8"	8 3/8"	4	1
_	**8" x 12"**	10"	14"	8 3/8"	2 3/8"	6	1
_	**10" x 10"**	12"	12"	10 3/8"	10 3/8"	6	1
_	**12" x 12"**	14"	14"	12 3/8"	12 3/8"	7	1
_	**12" x 16"**	14"	18"	12 3/8"	16 3/8"	9	1
_	**12" x 18"**	14"	20"	12 3/8"	18 3/8"	10	1
_	**12" x 24"**	14"	26"	12 3/8"	24 3/8"	12	2
_	**14" x 14"**	16"	16"	14 3/8"	14 3/8"	9	1
_	**16" x 16"**	18"	18"	16 3/8"	16 3/8"	11	1
_	**16" x 20"**	18"	22"	16 3/8"	20 3/8"	13	2
_	**18" x 18"**	20"	20"	18 3/8"	18 3/8"	12	3
_	**20" x 24"**	22"	26"	20 3/8"	24 3/8"	15	4
_	**20" x 30"**	22"	32"	20 3/8"	30 3/8"	20	4
_	**22" x 22"**	24"	24"	22 3/8"	22 3/8"	17	4
_	**22" x 30"**	24"	32"	22 3/8"	30 3/8"	22	4
_	**22" x 36"**	24"	38"	22 3/8"	36 3/8"	24	5
2	**24" x 24"**	26"	26"	24 3/8"	24 3/8"	18	4
_	**24" x 30"**	26"	32"	24 3/8"	30 3/8"	22	5
_	**24" x 36"**	26"	38"	24 3/8"	36 3/8"	25	5
_	**30" x 30"**	32"	32"	30 3/8"	30 3/8"	30	5
_	**36" x 36"**	38"	38"	36 3/8"	36 3/8"	41	5
_	36" x 48"	38"	50"	36 3/8"	48 3/8"	51	6

22 Models in bold above are stocked in one or more of our warehouse & manufacturing locations. See the Quick Ship Listing.
We specialize in producing panels with custom sizes and features.
Contact Customer Service with your requirements.

Model TM for Masonry, Tile and Wallboard is an all purpose 16 gauge steel access door affords fast and convenient access for inspection or service to vital components of plumbing, heating, air conditioning and/or electrical systems. The exposed 1" frame flange adds rigidity and conceals rough wall openings. The concealed hinged door is mounted to the frame and swings open for ease in servicing and results in a door always closing square in place. Nails, bolts or masonry anchors may be used to fasten the TM model securely in place.

SPECIFICATIONS

Frame: 16 gauge steel with 1" wall flange. 1-5/8" depth.

Door: 16 gauge steel mounted with 90° continuous, concealed hinge.

Finish: Gray powder coat primer.

Lock: Flush screwdriver-operated steel cam - C.

View Window

Louvered Vents

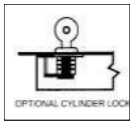

Order Format Example: TM-2424C W

TM - ____ ____ ____ ____
Width **Height** **Lock (C Std or Option Code)** **Special Finish**

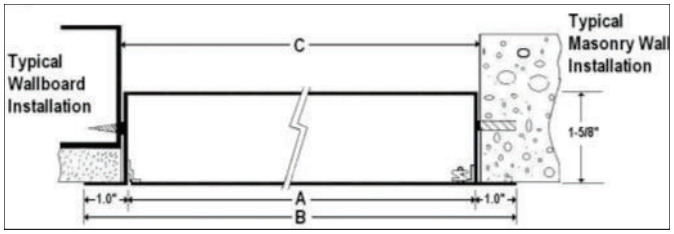

OPTIONAL FEATURES AT ADDITIONAL COST:

- [ ] 14 Gauge Construction
- [ ] Double door
- [ ] Louvered vents
- [ ] Plexiglass view window
- [ ] **(TMG)** Galvanized finish
- [ ] Rain Hood
- [ ] Gasketing
- [ ] **(RD)** Removable Door (no hinges)
- [ ] Optional color Code: _____ - see catalog or website
  W-White, **R**-Red, **BK**-Black, **S-s**and
  FBK-Flat Black, , **AB**-AMS Beige, **B**-Bronze
  SB-SC Flat Beige, , **SA** - Satin Aluminum
- [ ] Custom colors - submit paint chip.
- [x] **(L)** Cylinder lock installed
- [ ] **(MP)** Mortise cam lock prep
- [ ] **(MPI)** Mortise cam lock (06431) installed
- [ ] **(UM)** Mortise slam lock prep
- [ ] **(UMI)** Mortise slam lock (06431) installed
- [ ] **(LL)** Mortise deadbolt prep
- [ ] **(LLI)** Mortise deadbolt lock (06431) installed
- [ ] **(KK)** Knob cam
- [ ] **(CT)** Torx head cam
- [ ] **(CA)** Hex head cam
- [ ] **(SHC)** Spanner head cam
- [ ] Other 1-1/8" dia. mortise cylinder by request

JL INDUSTRIES / ACTIVAR INC. Construction Products Group www.activarcpg.com	Distributor:	Quantity:
	Contractor:	Approved By:
	Model #:	Architect:
	Project:	Date:

HEADQUARTERS:4450 WEST 78TH ST CIRCLE, BLOOMINGTON, MN 55435-5416 **PH**: 800-554-6077 **FAX:** 952-835-2218 **EMAIL:** JL@JLINDUSTRIES.COM WWW.ACTIVARCPG.COM
ACPG SOUTHEAST (THOMAS ENTERPRISES):FT MYERS, FL **ACPG WEST COAST (SAMSON)**: COMMERCE, CA **WAREHOUSES:** DALLAS TX, LANCASTER PA, ATLANTA GA, CHICAGO, IL, Seattle WA 7/14/11

JL INDUSTRIES

WARRANTY

Access Panels and Floor Doors

All products carry a one year warranty after date of shipment against defects in materials and workmanship. We will replace or repair any product found defective within this period at our discretion. No other warranty express or implied is valid.

JL Industries, Inc.
4450 West 78TH St. Circle
Bloomington, MN 55435
Ph:952.835.4944 Fax:952.835.2218
Email: sales@activarcpg.com
www.jlindustries.com

ACTIVAR INC. www.activarcpg.com
Construction Products Group

DOOR POSITION SIGNALLING

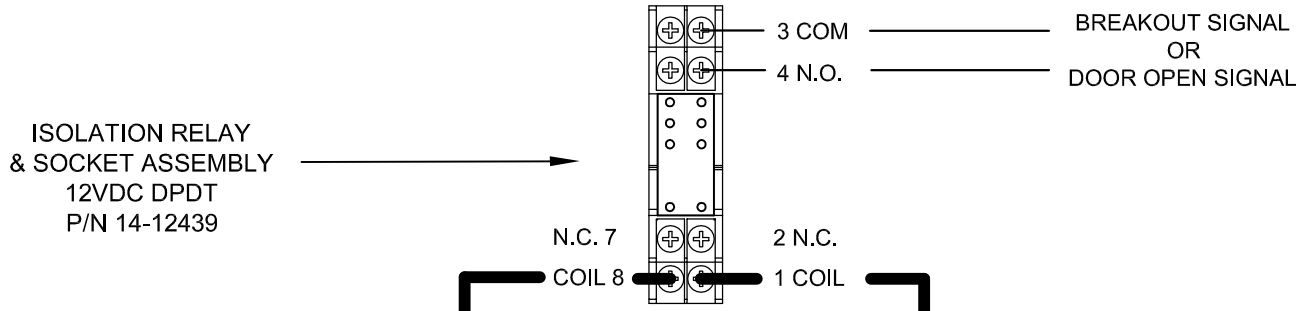

Battery back power required for the 1175 Unit to ensure security during a power failure.

12VDC-COMMON		7	16
Auxiliary Output (Open-Collector)		OUT	15
5Amax.(0-20V), 3.2Amax.(20-30V) 30V(42.4Vpeak)max. Contact Output (Class2 Load only)	Common	OUT.C	14
	N/C	OUT.B	13
	N/O	OUT.A	12
Sidelite Presence Sensor		SLS	11
Breakout Detector		BA	10
Sequential Activation		SQ	9
Exterior Activation		62	8
Mode Switch (see Mode SW Usage shown left)		M1	7
		M0	6
REDUCED OPENING SWITCH		H	5
HOLDING BEAM		6B	4
INTERIOR ACTIVATION		61	3
12VDC-(COMMON)		7	2
12VDC+		9DC12V	1
FUNCTION [SLIDING DOOR]		SYMBOL	No.

RELATED DEVICES - 16P

LABEL ON U30 CONTROL

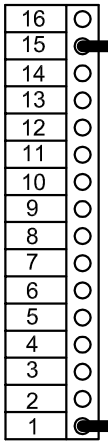

TERMINAL ON U30 CONTROL
P/N 14-11873

NOTES:

1. OTHER WIRES NOT SHOWN FOR SIMPLICITY.
2. USING "BLUE" HANDY TERMINAL, SET AUXILIARY OUTPUT 2 = 5
   RELAY CONTACTS WILL CLOSE IF:
   1. DOOR IS BROKEN OUT <OR>
   2. DOOR IS NOT FULLY CLOSED
3. ENSURE THAT ANY OTHER EXISTING WIRES CONNECTED TO THESE TERINALS REMAIN IN PLACE

MIDLAND BI-FOLD

DOORS

OPERATORS

MANUAL

PLEASE READ THIS MANUAL BEFORE OPERATING OR INSTALLING DOOR. IT IS IMPORTANT THAT THIS DOOR BE INSTALLED CORRECTLY IN ORDER TO ACHIEVE PROPER OPERATION AND ENSURE WARRANTABILITY.

TABLE OF CONTENTS

Section 1	**Operation**
Page 3	Operating Instructions
Section 2	**Maintenance**
Page 4	Maintenance Instructions
Page 5	Maintenance Schedule
Section 3	**Troubleshooting**
Page 6-7	Troubleshooting Guide
Section 4	**Electrical**
Page 8	Wire Size Requirements Limit Switch Adjustment Control Box Wiring Schematic (Inside Control Box Cover)

Midland Bi-Fold Door
Operating Instructions

Warning

** Do not operate door if any mechanical deficiency or problem is apparent**

Before Operating the Bi-fold Door:

1. Always disengage manual latches on both sides of the door (If applicable). Failure to do so will result in damage to the door or operator. If doors are installed with safety latch disconnect switches, be sure that the latch is tilted completely back on the rest. The latch disconnect switches prevent the door from operating if the latches are not fully disengaged.

2. Make sure all objects are cleared away from the outward and upward / downward motion of the door.

3. Always close the walk-in service door (if equipped) securely before opening bi-fold door and remove cane bolt (if equipped) from floor.

4. Push "Open" or "Close" button as desired. Press "Stop" to stop door travel at desired height or the door will stop automatically at the full open or closed position.

5. Never leave the door unattended while the door is in operation.

6. Do not work or move equipment under door when it is in operation.

7. If you plan to leave the building, always close and latch the door securely and never leave the door in the open position if you will be leaving the area.

8. **Caution** - Keep door closed and latched during high winds. Failure to do so may result in damage to door and building or may cause serious injury or death.

Maintenance

1. Inspect all set screws on operator components (sheaves & sprockets) to insure they are tight 30 days after installation. Follow same procedure every 3 months.

2. Inspect all cables or straps every month for signs of wear or fraying. Replace any cables or straps showing signs of wear immediately.

3. Check oil level in gearbox every 6 months. If oil level is down, replace with 15/40W oil.

4. Gearbox chain should be checked for alignment and lightly lubricated with gear lube oil every 6 months.

5. After some initial use of the bi-fold door the cables (straps) may stretch a small amount. This is normal and adjustment of the cables (straps) or limit switches may be necessary. Adjustment of the lifting cables (straps) should be done when the door is in the closed and latched position.

6. Instructions for the door adjustment of the top and bottom limit switches can be found under the control box cover.

7. It is very important to maintain even cable tracking on the drum, although minimal cable "walk" is acceptable. The door is designed to have enough room on the drum for the cable to maintain proper alignment at full open position. If the cable becomes to loose due to initial cable stretch, improper limit set, or obstacles preventing the door from reaching full close, excessive cable "walk" will occur. Cables must be realigned on the drum and properly tensioned.

8. If you are experiencing problems with your door, please contact a factory representative at 800-921-7008.

MAINTENANCE SCHEDULE

CAUTION: BEFORE SERVICING, ALWAYS DISCONNECT OPERATOR FROM POWER SUPPLY

Check at the intervals listed in the following chart

Item	Procedure	3 Months	6 Months	12 months
Cables	Check for fraying	*		*
	Check for alignment	*		*
	Check tension	*		*
Chain	Check for excessive slack	*		*
	Lubricate if necessary	*		*
Sprockets	Check Alignment	*		*
	Check set screw tightness	*		*
Sheaves	Check Alignment	*		*
	Check set screw tightness	*		*
Belt	Check condition & tension	*		*
Bearings	Lubricate if necessary		*	*
Fastners	Check & Tighten as necessary		*	*
Gearbox	Check oil level		*	*
	Use 15/40W oil to refill			

** Inspect and service whenever a malfunction is observed or suspected **

<u>How to order repair parts or service door</u>

Please contact a Midland Bi-fold Doors Representative
1-800-921-7008
Hours 8:00 a.m. to 5:00 p.m. CST
Monday through Friday

We service all makes and models of bi-fold doors.
If you need service on your bi-fold door, please give one or our reps a call.

TROUBLE SHOOTING GUIDE

	PROBLEM	SOLUTION
Motor will not run	1. No Power	Power not connected to building Replace circuit breaker or fuse
	2. Reset button tripped	Push reset button
	3. Safety switch on latches	Latch must be fully disengaged
	4. Top Override Switch	Remove switch & lower door Replace switch immediately
	5. Loose electrical connection	Make sure all connections are tight
	6. Motor wired wrong	Check wiring in motor
	7. Defective Motor	Replace motor
Motor hums but door does not move	1. Latch engaged	Disengage both latches
	2. Motor sprocket set screw loose	Tighten set screw
	3. Brake does not release	Check for correct voltage or make sure wires are connected properly
	4. Motor defective	Replace motor
Motor runs but makes a lot of noise and gets hot	1. Brake not releasing	Check for the correct voltage Check for low voltage
	2. No oil in gearbox	Fill gearbox with oil
	3. Defective Motor	Replace motor
Door does not stop at preset stops	1. Limit switches not set	Set limits in control box
	2. Limit switch not working	Wire not connected to the correct switch
Motor will not start under load	1. Low voltage	Increase wire size to operator
	2. No oil in gearbox	Fill gear box
	3. Brake not releasing	Refer to prior steps
Door Jumps	1. Bottom roller not turning	Rubbing against rail Replace bottom roller
	2. Cable not feeding properly	Fell off sheave Sheave not turning
	3. Bottom follower roller binding	Rubbing against I-beam Adjust location of travel
Bad cable wind	1. Cable drum not aligned properly	Re-align cable drum
	2. Cable attached to drum wrong	Re-thread cables
	3. Less than one wrap on drum	Make sure there is one wrap around drum when door is closed
	4. Door closed on object	Open door, remove object, re-align drum
Operator makes clicking noise	1. Chain & Sprocket out of alignment	Adjust chain & sprocket
	2. Worn sprocket	Replace sprocket
Operator rattles	1. Sheaves loose	Tighten sheave
	2. Brake vibrates	Check solenoid contacts & voltage
Operator makes thumping	1. Belt damaged	Replace belt

TROUBLE SHOOTING GUIDE

	PROBLEM	SOLUTION
Cable sheave worn one side more than the other	1. Sheave is out of alignment	Re-align sheave
Belt rolls on back side	1. Sheaves out of alignment 2. Belt worn or stretched	Re-align sheave Replace belt
Door difficult to latch shut	1. Bottom limit not set correctly 2. Bottom rollers resting on ground, ice, or debris 3. Other doors or windows open in building blow bi-fold outward	Reset limits Clear debris from roller path Close other windows and doors
Brake does not release	1. Wrong voltage 2. Incorrect wiring or broken wires 3. Burned out coil 4. Broken or damaged parts	Check for correct voltage. Voltage must correspond to that listed on the nameplate. Find the connection or wiring fault. Replace magnet assembly Replace
Brake does not stop properly	1. Brake is manually released 2. Worn friction disc 3. Broken or damaged parts	Determine if manual release is in normal position Replace disc if worn to 1/8" thickness. If disc replacement is not required, adjust air gap Replace
Brake chatters or hums	1. Wrong voltage supply 2. Dirty magnet faces 3. Loose or broken shading coil	Check for low voltage To remove dirt, insert a clean sheet of paper between faces and energize brake. Move paper between faces to dislodge dirt and remove paper. Replace magnet assembly
Manual release does not work	1. Improper setting 2. Broken or damaged parts	See owners manual Replace

ELECTRICAL REQUIREMENTS

SAFETY: 1. Wiring of the door should be done by a qualified electrician.

2. Always disconnect the power source before servicing the door.

The door is equipped with electrical wiring from the factory for both the power supply and the control circuits. This wiring is intended to facilitate testing, setting the limit switches and for temporary use. It is the responsibility of the owner to provide permanent wiring to meet the local electrical code.

Wiring diagrams for the operator can be found on the inside cover of the control box.

Wire size requirements:

- Control circuits (24 VAC) should use 16 gauge wire minimum.

  Power voltage and horsepower are listed on the control box and motor. The follow ing chart can be used to determine the appropriate wire size for your application.

MINIMUM WIRE SIZES FOR SINGLE PHASE MOTORS

115 volt

Motor HP	25 feet	50 feet	100 feet	150 feet	200 feet
1	12 ga.	10 ga.	8 ga.	8 ga.	8 ga.

230 volt

Motor HP	25 feet	50 feet	100 feet	150 feet	200 feet
1	14 ga.	12 ga.	10 ga.	8 ga.	8 ga.
1-1/2	14 ga.	12 ga.	10 ga.	8 ga.	6 ga.
(2) 1	14 ga.	12 ga.	8 ga.	6 ga.	6 ga.
(2) 1-1/2	10 ga.	10 ga.	8 ga.	6 ga.	4 ga.

MINIMUM WIRE SIZES FOR THREE PHASE MOTORS

	25—50 feet			100 feet			150—200 feet		
Motor HP	208 V	230 V	460 V	208 V	230 V	460 V	208 V	230 V	460 V
1	14 ga.	14 ga.	14 ga.	10 ga.	12 ga.	14 ga.	8 ga.	10 ga.	14 ga.
1-1/2	12 ga.	14 ga.	14 ga.	10 ga.	10 ga.	14 ga.	6 ga.	8 ga.	14 ga.
(2) 1	12 ga.	12 ga.	14 ga.	8 ga.	10 ga.	14 ga.	6 ga.	6 ga.	12 ga.
(2) 1-1/2	10 ga.	12 ga.	14 ga.	8 ga.	8 ga.	14 ga.	4 ga.	6 ga.	12 ga.

Width: [illegible] Ft 00 in Height: 17 Ft 00 in TOA: 20 Ft 00 in Qty: 1 Steel Job Name: Menards

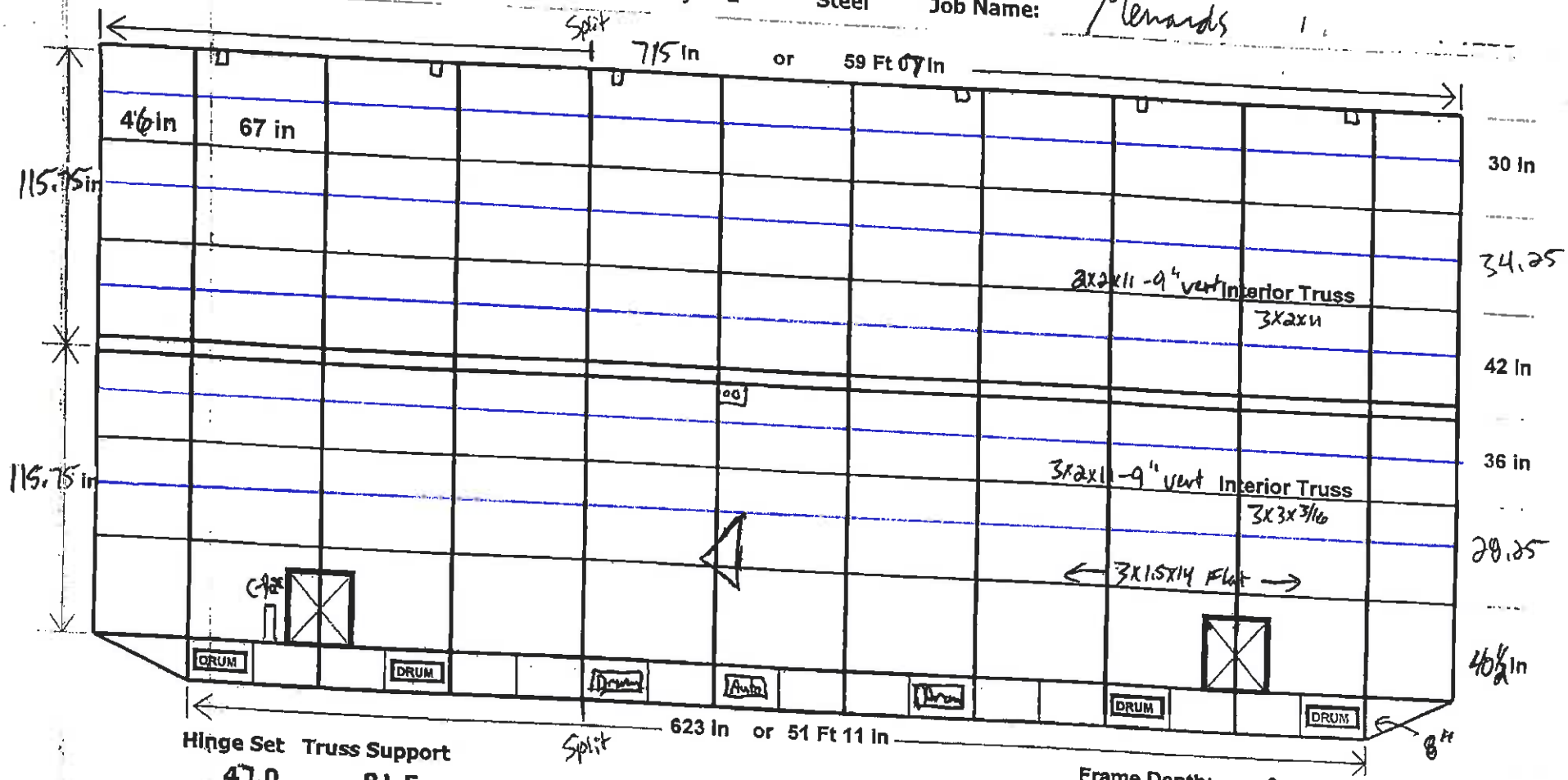

Hinge Set	Truss Support
47.0	81.5
116.0	150.5
185.0	219.5
254.0	288.5
323.0	357.5
392.0	426.5
461.0	495.5
530.0	564.5
599.0	633.5
668.0	

Window Qty:	0
Window Panels:	None
Walk Door Frame:	None
Walk Door Panel:	0

Frame Depth:	3
Top Angle:	None
Hinge Pins:	3/4
Bottom Roller:	4
Wind. or Follow.:	Windmill
Latches:	Auto
Liner Prep:	None
Lift Type:	Cable
Offset Center:	No

8/12/2010 8:34 AM

Width: Ft 09 in Height: 17 Ft 00 in TOA: 20 Ft 7 in Qty: 1 Steel Job Name: Menards

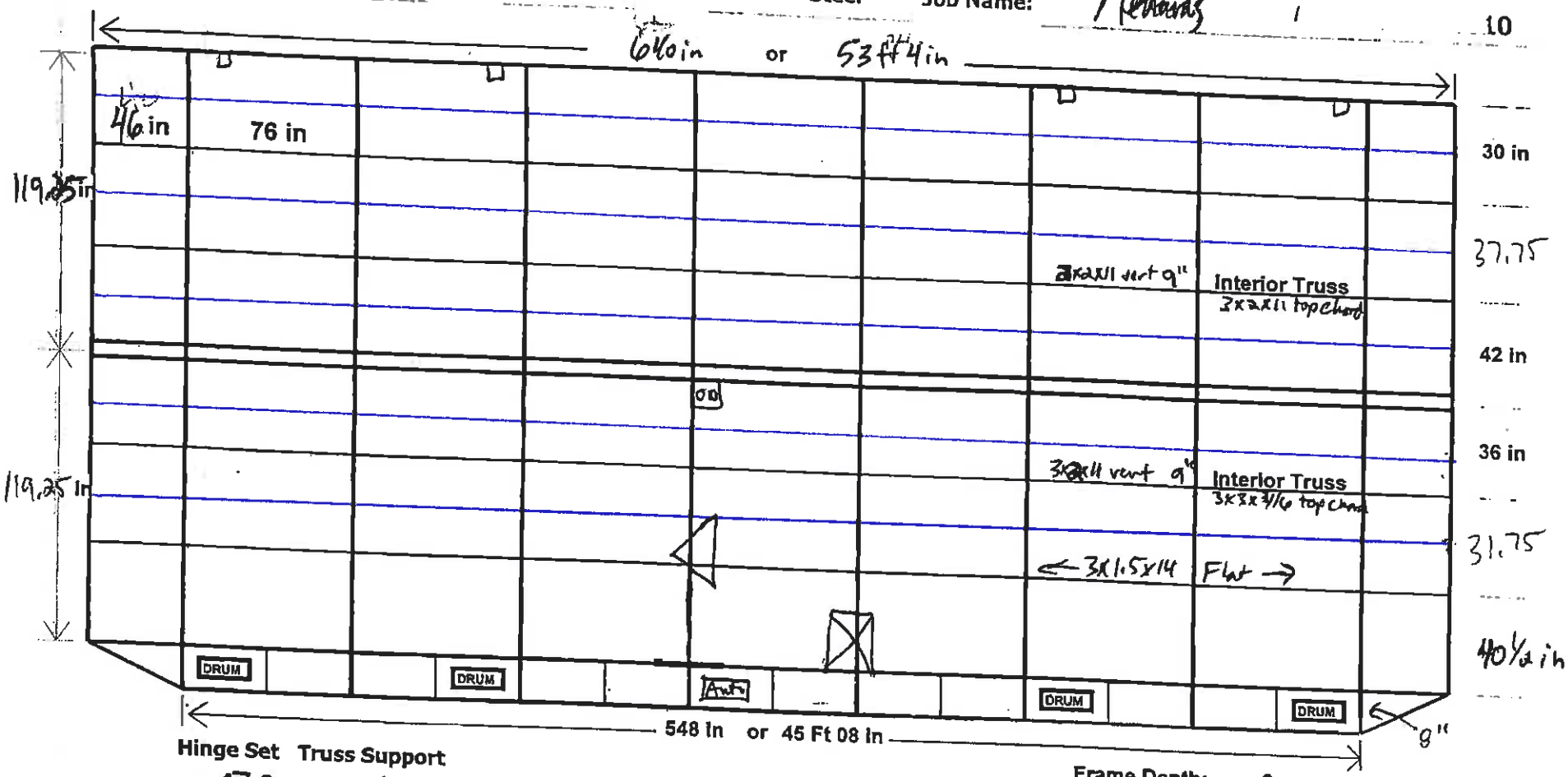

Hinge Set	Truss Support
47.0	86.0
125.0	164.0
203.0	242.0
281.0	320.0
359.0	398.0
437.0	476.0
515.0	554.0
593.0	

Window Qty:	0
Window Panels:	None
Walk Door Frame:	None
Walk Door Panel:	0

Frame Depth:	3
Top Angle:	None
Hinge Pins:	3/4
Bottom Roller:	4
Wind. or Follow.:	Wind rail
Latches:	Auto Latch
Liner Prep:	None
Lift Type:	Cable
Offset Center:	No

8/22/2010 3:10 PM

Width: Ft 10 in Height: 17 Ft 00 in TOA: 20 Ft 00 in Qty: 1 Steel Job Name: Menards

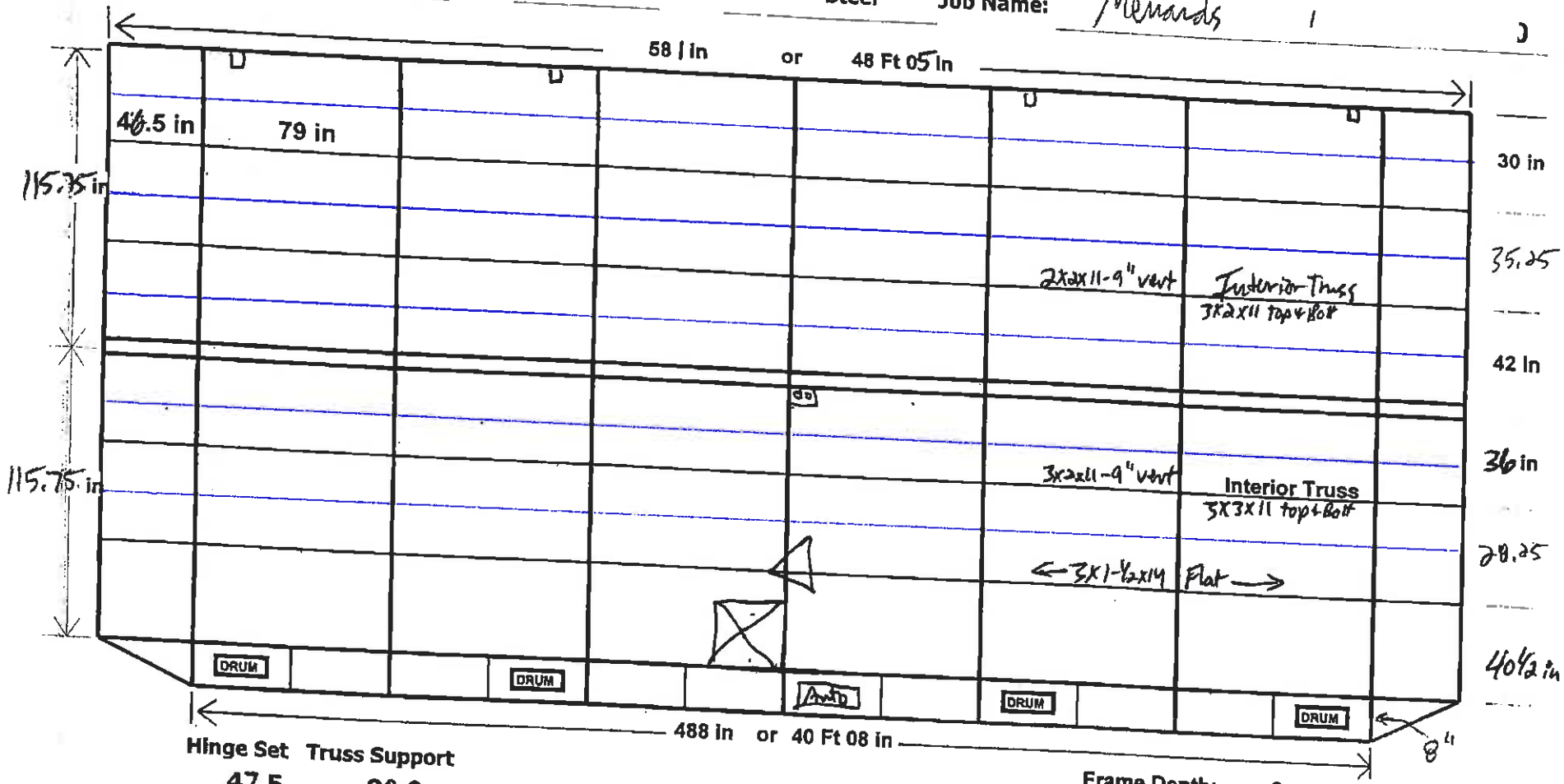

Hinge Set	Truss Support
47.5	88.0
128.5	169.0
209.5	250.0
290.5	331.0
371.5	412.0
452.5	493.0
533.5	

Window Qty:	0
Window Panels:	None
Walk Door Frame:	None
Walk Door Panel:	0

Frame Depth:	3
Top Angle:	None
Hinge Pins:	3/4
Bottom Roller:	4
Wind. or Follow.:	Windrail
Latches:	Auto
Liner Prep:	None
Lift Type:	Cable
Offset Center:	No

8/12/2010 8:49 AM

MIDLAND BI-FOLD DOORS
INSTALLATION GUIDE

Installation Safety Guidelines

Midland Bi-Fold Doors are very heavy and need to be handled with care. It is important to have a minimum of 2 people working with the doors at all times. When working with Bi-Fold doors, ensure that you have an area that is free from obstructions. Any items that can interfere with the set up and installation of the doors need to be removed.

Anyone not immediately working on or with the Bi- Fold door should not be allowed in the area. Those that are should maintain a safe area to work in. When working with the Bi Fold door, keep away from all moving parts. Take care not to stand directly in the opening of the door while being installed or during operation of the door.

When lifting the Bi- Fold door sections, it is important to have the equipment capable to handle the weight of the sections and the completed door. When lifting the sections, use a lift strap rated to handle the weight of the sections. The use of a forklift or crane truck is highly recommended.

Please follow the installation instructions. It is very important that you do not tighten cables until the auto-latch system is set and the motors have been tested to ensure they are turning in the proper direction. Pictures are included to ensure you have all items set properly before connecting power to the door.

Installation of the Bi- Fold door should be completed by Qualified Professionals, or with the assistance of technical support from Midland Bi -Fold Doors.

CAUTION:

WHEN UNLOADING DOOR SECTIONS OFF SEMI TRAILER, PLEASE USE CAUTION NOT TO DAMAGE ANY OF THE PREASSEMBLED COMPONENTS (MOTOR, GEARBOX, GUARDS). IF ANY COMPONENT IS DAMAGED DURING UNLOADING, DO NOT OPERATE THE DOOR UNTIL THE DAMAGED COMPONENT IS REPLACED.

Warning placards should be mounted on door jamb next to the push button station.

Installation Materials

3” Top Hinge Angles

Hinge pins

Expansion pins

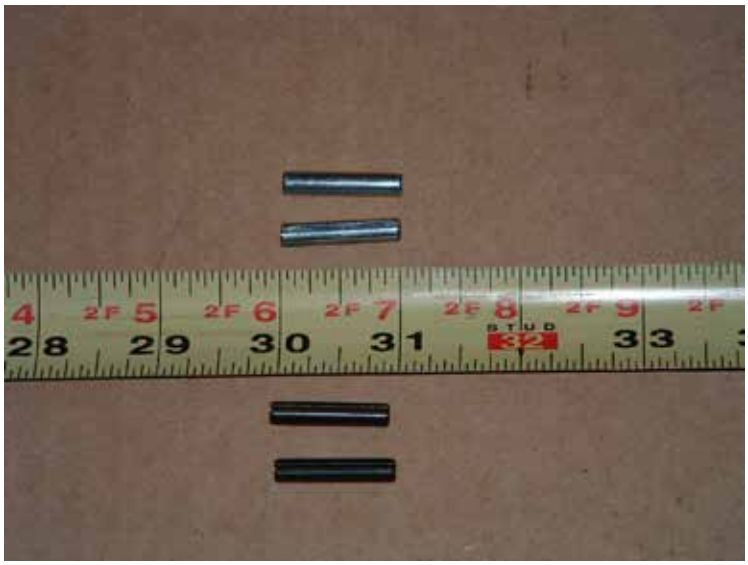

Bottom Roller

Windrail Assembly

Top and Bottom Rubber Seal

Autolatch Limit with Cord

Auto-latch Turnbuckle

Autolatch Jamb Plate

¼” Lift Cables

¼” Cable Clamps

Cable Kick Out

Cable Kick Out Stop

7/16 Head Tek Screws

¾” Pan Head Phillips Tek Screws

3/16” x 6” x 11” flat

Formed Extensions

Autolatch Spring

Tools needed for Installation

Forklift or Crane truck
    Must be able to reach 3 FT higher than total door height
Scaffolding
    Or some type of work platform
Drill
    3/8 or ½
Screw Drivers
    # 2 Phillips
    Flat blade
Nut Drivers
    ¼, 5/16, ½
Hammer
    Claw , Sledge
Screw Guns
    Electric or cordless
Level
    Recommend 4 ft
Large adjustable 24” Slide clamps
Cable Cutters
Scrap wood – 2x4

Installation Procedures

Work Area and Opening Prep

Before beginning the installation of the bi-fold door, the work area needs to be cleared of debris and equipment. Inspection of the opening is required to ensure proper clear open measurements. This includes checking for plumb and level column and header as well as checking that the opening is square. You will need to make sure that the opening is prepared to the specs provided by manufacturer.

Clear the area in front of the opening. Make sure that all debris is out of the way. You will need the extra room for laying the door out in front of the opening.

After preparing the opening, the next step will be to get the door ready for installation. You will need some blocking to lay under the door frame. Place two 2 x 4 scrap pieces underneath the frame at the first vertical from the outside of the door and at two points in the center of the door. Blocking should be placed under the bottom and top of the section on the ground.

Positioning the Bottom Section

You will need to lay out the frame according to the door opening sizes. If you haven't already, determine which sections go together. The two smaller doors will have two sections each, while the largest door will have four sections.

First, lay out the bottom section (this is the section with the motor on it) in front of the opening. You will need to add blocking under this section. When on the ground, the operator and truss should face the sky. Make sure when positioning the section to have an equal amount of space on both sides of the door jamb. The frame should over hang the jambs by 1 ½" on both sides. Also, leave the door frame 4" – 6" away from the jambs. This will allow for you to insert the bottom rollers at a later time.

Next, take the greased hinge pins and insert into the hinge locations at the center of the door. Ensure that the pins do not stick into the opening between the two hinges. When inserting the outermost pins, make sure that they are placed from inside to out of the door frame.

.

Positioning and Attaching the Top Section

After all the hinge pins are in place, begin placing the top sections directly over the center of the door. Match up the hinges and start from one side of the door and work your way across the door. A forklift is required to hold the top section above the bottom section while each hinge is aligned and a pin hammered though the entire hinge. Do not skip hinges as this will cause misalignment. After the hinge pin is pushed through the hinge, secure the hinge pin with an expansion pin in the hole on the end of the hinge pin. The expansion pin will stick out an equal amount on each side of the pin.

With the forklift in place, hold the top section standing up so that you are able to complete further steps.

Applying the Hardware – Required Before Lifting the Bi-Fold Door into Place

With the top section in the upright position, the next step is to attach the cables to the drums. Holding the cable guard with the slot facing the outside of the building, route cable end with the stop through the slot opening and under drum, wrapping counter -clockwise, a minimum of 2 times (No more than 3 times) around the drum. Next, place the swaged end of cable into the hole on side of drum and secure cable under retaining clip on drum. Pull the cable tight around the drum, while assuring that cable is pushed tight against the retaining clip and hammer clip to secure cable. **Ensure that all drums have equal number of wraps.**

Correct Cable Placement
Cable should always start on far left of drum

INCORRECT CABLE PLACEMENT
NEVER OPERATE DOOR IF CABLE IS IN THIS POSITION

Do not tighten lift cable until automatic latch arms and bottom limit switch have been properly set.

Next, put the kick outs and kick out stops onto the door. This will be done using the 7/16 head tek screws. Take a measurement from the vertical tube next to each cable drum to the center of the cable drum. If the cable drum is on the left side of the vertical, position the kick out stop 11 inches from the edge of the vertical to the center hole of the plate and attach with self tapping screws. When the cable drum is on the right side of the vertical, position the kick out stop 6-1/2” from the edge of the vertical to the center hole of the plate. The kick out stop will be screwed to the short side of the bottom center horizontal tube. The cable kick out will be screwed to the center horizontal of the top section, on the top side of the tube. Center the kick out on the plate as shown below. **Cable Kickouts and stop plates can be installed before the door is lifted into the air.**

Positioning of the cable kickout when the drum is on the left side of the vertical.

Positioning of Cable Kickout when drum is on the right side of vertical.

Attaching Top Hinges

Attach the hinge pins to the hinge locations on the top of the door. Place top hinge angles onto door inserting the pins completely through the hinge. Secure with expansion roll pins in hole on end of hinge pin. The side of the hinge angle with the slot will be welded flush against the header. On the two outermost hinge locations, place the hinge pins from the inside out of the door frame.

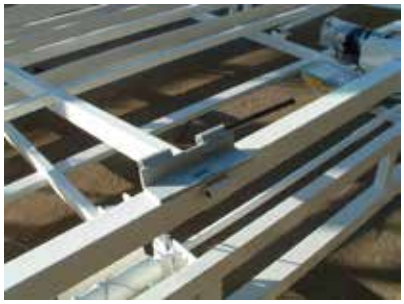

Applying the Top Seal

Before lifting the door, you will need to apply the top rubber seal. Each door has top and bottom rubber cut to size, please be sure you have the right length roll before you apply to the door. This is a two part task. While applying the rubber seal, you will also have to place the “J” channel on the top tube of the top section. When putting the top rubber on the door, extend the rubber 8” past the side of the door and fold back under the j-trim. This will leave about 3” – 4” over hanging the outside of the door. Also, place the rubber on the door so that it is flush with the bottom edge of the tube. Place the “J” channel so that the bottom of the channel is flush with the tube. Use self tapping pan head screws to attach “J” channel and rubber at the same time. After attaching, go back and apply a bead of silicone to the top side of the “J” channel.

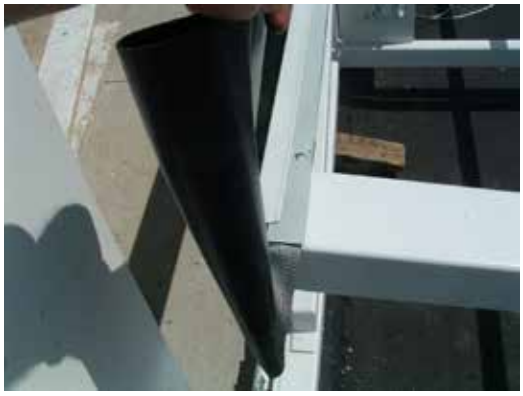

Attaching the Cables to the Top Section

Attach the cables to the anchor points on the top section. Loop cables through the anchor point and around the cable loop from the top side. Position the cable over the thimble (loop) and apply the cable clamps, but only one at a time. **Caution – The nuts should be tightened on the side of the cable which runs down to the drum.** With the second cable clamp, put the end of the spring into the clamp and then onto the cable. **Do not tighten as you will need the extra slack to set the limits of the door**. At this time the nuts only need to be hand tightened as adjustments will be made when the door is lifted in to place.

Hanging the Bi Fold Door

With the previous steps completed, you are now ready to mount the door to the header. It is recommended to use lifting straps or an extendable boom forklift. Make sure that all items are secured to the door and that the opening is clear of any obstructions. Before lifting, make sure the top hinges and top rubber seal are flipped towards the outside of the frame to allow the door to be placed against the door jambs without any interference at the header. Make sure that bottom rollers have been installed on the bottom corners of the door.

It is important to lift from the center of the door. Place the lift straps on the two verticals near the center of the top section. This will ensure that you are lifting in the center of the door. If using a forklift, widen forks as much as possible, and lift from center of door. When the door is lifted fully upright, position the door into the opening.

When lifting the door into position, use the blocking under the door to shim up or down to get the desired height of the door. For reference, if the ground you are working on is completely level, there should be 3 ½" from the bottom of frame to the concrete. Make sure that the hinges are flat against the header. The door should overlap the jamb on the sides by 1 ¼" to 1 ½" on both sides. If the door needs adjustment from side to side, use a large pry bar to guide it one way or the other.

After the door is in place and square to the building, use a slide clamp to secure the door to the jambs. The door should have about 3-1/2" from the bottom frame of the door to the ground. CAUTION- Before welding into place, make sure that all tolerances have been met (door to ground, side to side, and square).

Welding the Bi Fold Door

With the door clamped into place and with having met all measurements, the door is now ready to be welded to the header. Using a clamp, tighten the hinge angles against the header. It is imperative that a good solid weld is completed around the hinges.

After the hinges are welded to the header, you may now apply the top rubber over the hinges and fasten with pan head tek screws to the girt above. On the sides of the door, extend rubber 8” past the side of door and fold back and tuck under the j-trim on the top of the door. The rubber that extends past the door will be wrapped around the side and placed under the side trim when applied.

Attaching Electrical Cords to Frame

WARNING-Before connecting any wires or working inside the control box, power must be disconnected to prevent serious injury or death.

Please ensure that lift cables are not tightened before power is connected and you ensure motor is spinning in the proper direction.

Run the electrical cords from the motor across the frame to the side closest to the power supply. Attach to the frame using nylon zip ties, or rubber cushion clamps for electrical cords. **Always route the cords under steel trusses and cables**. When going across the door, attach to the horizontal tubes. At the vertical tube closest to the outside of the door, run the cables up wards. **When routing over the center of the door, make a loop to allow for the door to open and close, so that the cords are not stretched or pinched**. Run the cords to the top of the door. It may be necessary to position the cords on the side of the vertical tubes at the top to allow for the door to be positioned tight against the opening. Double zip tie at the top of the door. Leave the rest of the cords hanging at this time. When moving to the inside of the door, you can finish routing the electrical cords.

When attaching the cords to the control box, place cords into the following positions on the terminal strip in the control box.

Electrical Connections for 48'& 53' Door (Single Motor)

Control Box – Chamberlain K-MBF2043M

Push Button Cord
1 Open
2 Close
3 Common
4 Stop

WARNING
When connecting the power cord to the control box, ensure the phases are hooked up properly before running the door. If phases are hooked up backwards, it will cause the motors to turn in opposite direction and will do major damage to the latching system. It is recommended to start and stop the door quickly before running a complete cycle to ensure the motor is turning in the proper direction.

Power cord
L1
L2
L3
Wire nut to green ground wire

Connecting motor wire on dual motor drive

WARNING – It is important to ensure both motors are turning in the same direction before you weld the center splice shaft on the 60' door

To wire up the motor, the 12-4 cord from the splice section should be connected inside the control box to the A, B, C motor connection terminals. The wires should be connected in the following order. You will match the motor lead wires to the motor wires already installed inside the control box.

Motor #1:	Red to A Black to B White to C
Motor #2:	Red to D Black to E White to F

A**uto Latch Limit**

On the terminal strip inside the control box:

Remove the jumper between 6 and 8

Connect the red wire from the auto latch limit switch to terminal #6
Connect the black wire from the auto latch limit switch to terminal #8

Affixing the Auto Latch Jamb Stubs

After the door is welded into place, attach the jamb stubs into the opening. Position the jamb stubs on the opening, with the pieces of flat towards the inside of the opening. The top of the jamb stub plate should be even with the bottom of the two cable pulley bracket on the door. To attach the jamb stub to the jamb, weld the jamb stub to the flanges of the i-beam jamb. The location of the jamb is as shown below.

CORRECT JAMB STUB PLACEMENT

Auto Latch Set Up

At the center of the door is a bar with cables and pulleys running on each side. An external limit switch (Omron), supplied by manufacturer, needs to be mounted to the galvanized triangle guard. CAUTION: DO NOT MOUNT SWITCH UNTIL DOOR LATCHES ARE CLOSED AND IN THE LOCKED POSITION AS SEEN ABOVE. THIS REQUIRES THE DOOR TO BE RAN UNTIL THE LATCHES PULL THE DOOR FRAME AGAINST THE JAMB. **DO NOT RUN MOTOR CONTINUOUSLY UNTIL DETERMINING MOTOR IS TURNING IN CORRECT DIRECTION. BEFORE MOUNTING SWITCH THE BOTTOM LIMIT MUST BE SET INSIDE THE CONTROL BOX.**

With the door still clamped, push the close button until the latch arms hit the pegs and pull the door against the jamb. Once the auto latch cables are tight, stop the door. To set the bottom limit, open the control box cover and move the right nut towards the limit tab until you hear it click. The limit switch should be mounted to the guard with the spring arm of the limit switch is pointing towards the arm or the outside of the door. When the door is closed and bottom limit set, the limit switch should be mounted so the whisker touches the bottom of the bar. This limit will be used as the safety back up bottom limit. After you mount the switch, run the cord into the control box by the motor and hook up to terminals 6 and 8 on Control Box. **(Jumpers need to be removed from 6 & 8 before connecting the limit switch wires)**

After bottom limit and safety limit switch have been properly set and BEFORE TIGHTENING LIFT CABLES, press open button to allow latch bar on the triangle to move 3 inches above the whisker limit switch and press stop. When bar is located at the correct distance from whisker switch you may now proceed to tighten the cables.

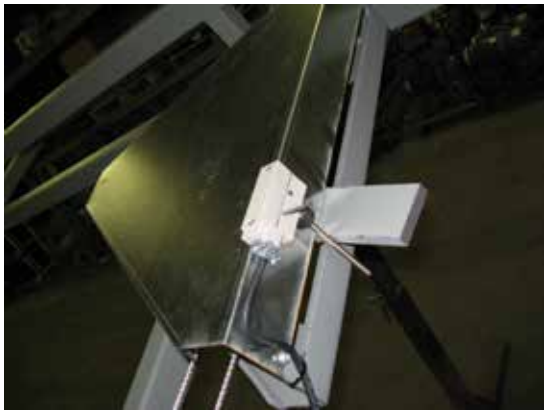

After bottom limit set, mount switch As shown above

After switch mounted and bottom limit set Open door and stop when bar is 3” above Switch as shown above.

Lift Cable Tightening

CAUTION – This should only be completed with the door in the closed and latched position.
This step requires two people. One person needs to pull the lift cable tight on the drum. The cable should be moved all the way to the left side of the drum and pulled tight. The person on the ground will hold the cable tight so it does not move on the drum. This person will also guide the cable on to the kick out in the center of the door. When the cable is on the kick out in the center of the door, the person at the top of the door will pull hard on the excess cable and tighten the cable clamps. With one cable clamp tight, pull down on spring to expand it to 8 to 10 inches and tighten with the second cable clamp. The extended spring will take up excess slack in the cable. **After all cables are tightened, cut off excess cable to 3 inches below the second cable clamp.**

Running the Bi Fold Door

After the door is welded to the header, and the jamb stubs are welded on, and the limit switch is mounted, you will now be ready to start setting the door. The cables should be tight with equal tension on each location. You can push the close button and the door should stop with the latch arms tight against the center jamb pegs. The center bar located in the triangle should be ½" away from the whisker switch. **The center bar should not hit the whisker switch as this is a back up to the limit inside the control box.**

After the bottom limit is set properly, you may now set the top limit. The final step is to remove all clamping hardware. Check over the door once more to make sure all connections have been made and that the door opening is clear of obstructions.

Setting the Door Limits

To set the top limit, open the black control box cover. In the bottom of the box you will see two plastic nuts with notches traveling on a threaded shaft. The open limit is on the left hand side of the box. You will need to open the door so the top of the frame is flush with the top of the mansard and then stop the door. **When opening the door, pay attention to the outside of the frame as the door goes up. It is very important that the door does not hit the mansard. If the door will clear the mansard, continue running the door up to the full open position.**

Once you have reached the proper height, stop the door and adjust the limit nut inside the control box by pressing down on the plate and spinning nut towards the open limit until you hear it click. **Make sure the nut makes contact with both limit switches on the open side. Use caution to ensure the bottom limit nut does not move during adjustment. When nut is in correct location, release plate into slot of limit nut. It is important that the nut is locked into position by the slot and plate.**

Adding Extensions to the Door

Standing on the outside of the door, place the extension on the door so that the “J” part is towards the inside of the door and under the frame. Place blocks under the extensions to get them 3” off the ground. Start the first extension next to the edge of the roller carrier. **This will leave a 10”+ gap at the side of the door. This will leave enough clearance for the jamb stubs welded to the i-beam when door is in operation**. Fasten the extensions to the bottom tube of the door and to the verticals where appropriate.

At the bottom corner on each side, the gap will be sealed with the following steps. First, weld the 6- inch flat iron to the inside of the i-beam flange. **Note: the shaft on the inside of the door in the picture is no longer used**.

Next, fasten the 2 x 3 formed angle from the bottom of the extension to the bottom tube on the bi-fold door. Then attach the 6 inch wide rubber pieces to the outside of the flat iron and fasten a small piece to the side of the 2 x 3 formed angle.

Finally, attach the 6 inch wide rubber to the 2 x 3 formed angle on the inside of the door. The next step will be to apply the 18” wide bottom rubber on the bottom of the door extension. This is applied by looping the seal into a “U” shape and fastening to the extension with the tek screws. Seal should compress against the ground.

After the seal is applied, the base trim can be fastened over the rubber seal as shown below.

Testing the Door

Now that all steps have been completed, it will be time to test run the door. Make sure that all bystanders are clear of the door when running. Open the door to full height. Make sure that door stops at set height. Close the door. Make sure that latch arms pull door tight against jamb. When closing, the door should pull itself tight with the arms. **When the door is closed, make sure the center triangle bar is ½" above the whisker limit switch**.

After installation is complete, place safety placards by push button station so that everyone who operates the door can see the proper procedures for running the door.

60 Foot Door (Split Sections):

Laying out the Bottom Sections

When positioning the sections for this door, you will need to make sure that the splice area is level. Place the larger section on the ground first, followed by the smaller section. Place blocking under both sections. This will allow for easier movement of the smaller section to get it into position. After the 2 sections are together, and all tubes are even and tight to one another, weld them together. **Welds should be placed every 12 inches along the splice. Weld center tubes, top tube, bottom tube and truss complete around entire tube**. At the shaft location in the splice, position the shaft collar over the 2 pieces, covering the shaft equally. **WARNING - DO NOT WELD THE SHAFT COLLAR OVER THE SPLICE UNTIL YOU HAVE TEST RUN THE DOOR TO ENSURE BOTH MOTORS ARE RUNNING IN THE SAME DIRECTION.**

Attaching the Top Section

Begin with pinning the large section on first. Follow same steps as previously stated. After pinning the top section, lay it down onto the bottom section. Next, pin the smaller section to the bottom section. Again, after all pins are in place, lay the section down. Make sure that before welding, all tubes line up and are even with each other. At this time you will only be able to weld the outside of the door. After welding is complete, lift door back up so that the top section is at 90 degrees to the bottom. Begin welding the inside of the door.

Applying the Hardware

See prior sections and follow steps that apply to single section doors.

Auto Latch Arm Cables

Using the turnbuckle supplied, attach the 2 cables together. Fasten the cables with the cable clamps supplied. The cable clamps should be tightened with the nuts on the cable that leads to the center and sides of the doors. Tighten the cable lengths to the point of just bringing the side arms down.

Attach the zinc extension springs (16”) to the hole on the pulley tab on the latch arm. Stretch the springs out to the first vertical tube, and tighten with a cable clamp. Repeat for the other side.

Electrical Connections for 60’ Door

Control Box – Chamberlain K-MBF2043DM

Push Button Cord
1 Open
2 Close
3 Common
4 Stop

WARNING
When connecting the power cord to the control box, ensure the phases are hooked up properly before running the door. If phases are hooked up backwards, it will cause the motors to turn in opposite direction and will do major damage to the latching system. It is recommended to start and stop the door quickly before running a complete cycle to ensure the motor is turning in the proper direction.

Power cord
L1
L2
L3
Wire nut to green ground wire

Connecting motor wire on dual motor drive

WARNING – It is important to ensure both motors are turning in the same direction before you weld the center splice shaft coupler on the 60’ door

To wire up the 2 motors, the 12-4 cord from the splice section should be connected inside the control box to the A, B, C motor connection terminals. The wires should be connected in the following order. You will match the motor lead wires to the corresponding colors inside the control box.

Motor #1:	Red to A
	Black to B
	White to C
Motor #2	Red to A
	Black to B
	White to C

Auto Latch Limit

On the terminal strip inside the control box:

Remove the jumper between 6 and 8

Connect the red wire from the auto latch limit switch to terminal #6
Connect the black wire from the auto latch limit switch to terminal #8

Final step to the installation would be to apply the wind rail to the outside of the i-beam jamb. When the door is in the closed and latched position, place the 4 inch flat iron perpendicular to the jamb face. With windrail (formed angle) bolted on, position so windrail covers the face of the bottom roller as shown below. Then weld the flat iron to the i-beam face. After welded in place, adjust windrail so bottom is tight against the roller and top is pulled out away from jamb.

Packaging Details - Knock-Down Doors - Series 500

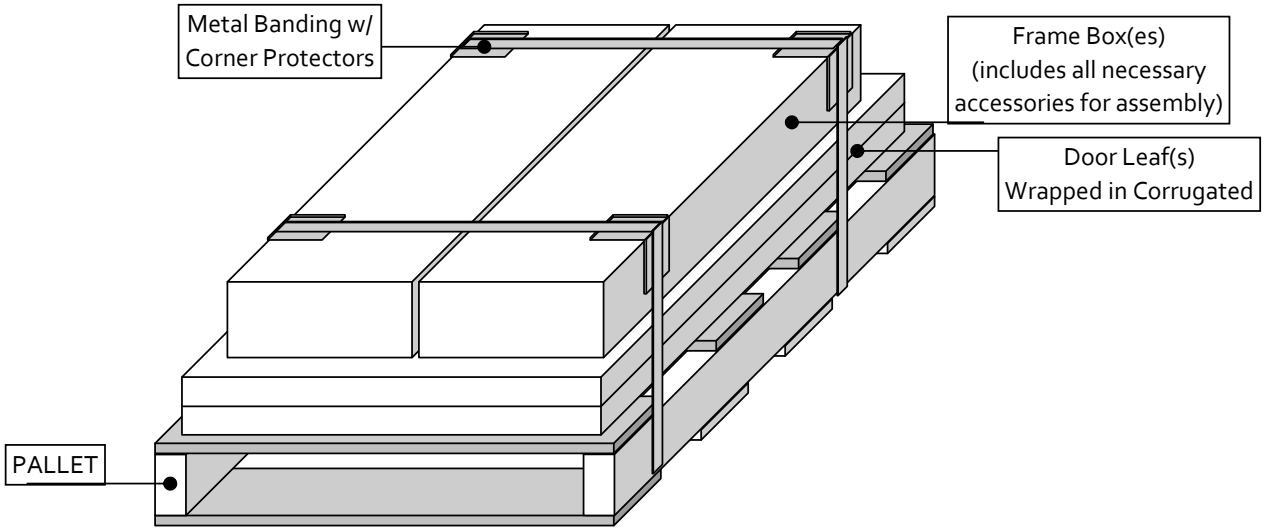

ECBB1100

Description: Five Knuckle - Ball Bearing - Standard Weight

Description	- ANSI A8112 - Five knuckle - Two ball bearings - Non-rising removable pin with button tip and plug - For use on medium weight doors and doors requiring medium frequency service
Material	- Steel with Steel pin
Fasteners	- All machine and all wood
Finishes	- USP, US3, US4, US10B, US15, US26, US26D

Hinge Size (inches)	Hinge Size (mm)	Gauge of Metal	Hole Count	Screw Size (Machine)	Screw Size (Wood)
4-1/2 x 4	114 x 102	0.134	8	1/2" x 12-24	1 1/4" x 12
4-1/2 x 4-1/2	114 x 114	0.134	8	1/2" x 12-24	1-1/4" x 12

Phone: 800-647-7874
Fax: 800-255-7874
www.ngp.com

L-1900

Fusible Link Louver for 1 3/4" Thick Fire-Rated Doors

STANDARD FEATURES

* 18 ga. cold rolled steel frame
* 18 ga. cold rolled steel adjustable "Z" blades
* Mitered and welded corners
* Free area = 40%
* 165° Fusible link (90 minute fire rated)
* #8 x 1" phillips head SMS
* Gray Primer Finish standard

OPTIONAL FEATURES

* Dark Bronze or Putty (Beige) Finish
* Stainless steel #304, #4 finish
* Aluminum 18 x 16 mesh insect screen (installed on exterior side)
* Torx Security screws
* Thicker doors (up to 2 1/8")
* Odd inch sizes (maximum 24" x 24", minimum 12" x 6")

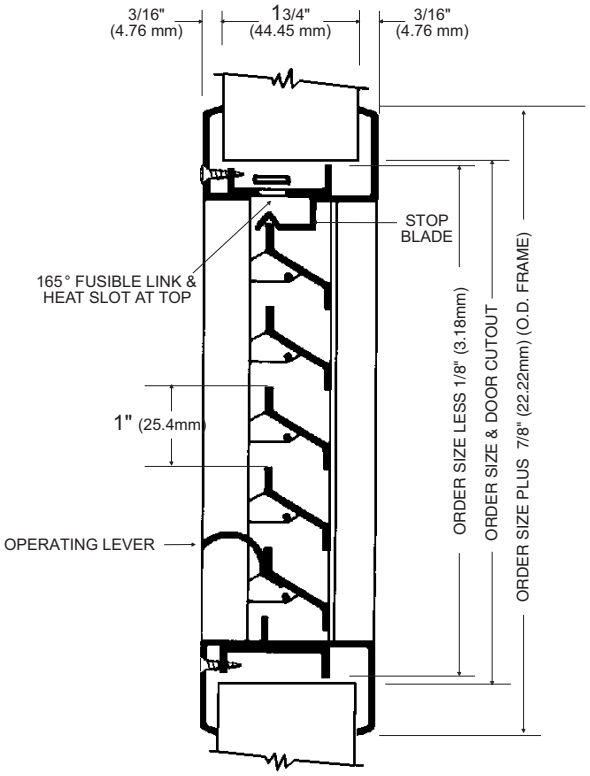

not to scale

undersized 1/8" for clearance

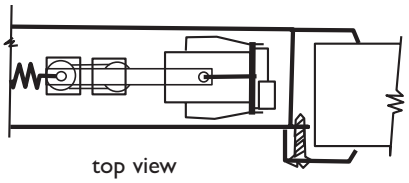

top view

Stock Sizes Available

12 x 12
18 x 12
18 x 18
24 x 12
24 x 18
24 x 24

LISTED
Fire Door Glass Light Frame
UL10B, UL10C
Complies with
UBC 7-2 (1997), IBC
requires fire-rated glass
& glazing tape

STEELCRAFT®

L18 AND L16-SERIES HONEYCOMB DOORS

HD X-HD

FEATURES AND BENEFITS:

Steelcraft's L-Series Doors offer the following standard unique features, which enhance long term performance and durability.

1. **Honeycomb core system** enhances the structural integrity of the door, while significantly reducing the weight.
2. **Full height, epoxy filled mechanical interlock edges** provide structural support and stability the full height of the door edges.
3. **Patented universal hinge preparations** allow for easy field conversion from standard weight (.134) hinges to heavy weight (.180) hinges.
4. **14 gage top and bottom channels** provide stability and protection for the top and bottom edges from abuse.
5. **Beveled hinge and lock edges** allow for tighter installation tolerances, ensure easier operation, and eliminate binding and sticking.
6. **Recessed Dezigner™ glass trim** provide a clean, neat, and flush finish with the door surface.
7. **Factory applied baked on rust inhibiting primer** in accordance with ANSI A250.10.

ABOUT THE PRODUCT:

The L18 and L16-Series Flush Doors are designed to meet the architectural requirements for full flush doors. This premium door construction combines the strength and dimensional stability of steel with the structural integrity of the honeycomb core. The continuous bonding of core to metal provides an attractive flat door, free of face welding marks. Tests have proven that the L-Series door has integral high resistance to impact damage, low thermal conductivity, and high STC ratings.

To meet application, specification and performance requirements, the L-Series doors offer a wide range of specifiable options including sizes, glass lite designs, hardware (mechanical, pneumatic, electrical) preparations and edge constructions.

SPECIFICATION COMPLIANCE:

1. Door construction for the Steelcraft L18 and L16-Series Full Flush Doors meet the requirements of ANSI A250.8-1998 (commonly referred to as SDI-100).
2. Hardware preparations and reinforcements are in accordance with ANSI A250.6-1997. Locations are in accordance with ANSI/DHI A115.

FIRE RATINGS:

The L-Series doors meet the broadest fire rating requirements. They are listed for installations requiring compliance to both negative pressure testing (ASTM E152 and UL-10B) and positive pressure standards (UBC 7-2 and UL-10C)

Steel Thickness	Opening	Usage Frequency[1]	Frame Applications
16 gage (1.3mm)	Interior & Exterior	Extra-heavy duty	• 16 & 14 gage steel frames
18 gage (1mm)	Interior & Exterior	Heavy duty	• 16 gage steel frames
Steel Type	**Opening**	**Building Applications**	
Non Galvannealed[3]	Mainly Interior	• Typical building conditions	
Galvannealed[2]	Mainly Exterior	• Used in locations with high humidity and/or weather exposure	

MATERIAL:

Depending on environmental conditions, exterior doors are generally galvannealed and interior doors non galvanneal. All doors are supplied with a factory applied baked on primer for field applied finish paints.

[1] Usage frequency is based on ANSI A250.8-1998
[2] Reinforcements for galvannealed doors are also galvannealed
[3] Commercial quality carbon steel

IR Security & Safety®
Proven Source. Proven Solutions.™

Details are subject to change without prior notice.

© 2000 Steelcraft Co.
Printed in USA

Single Door Elevation

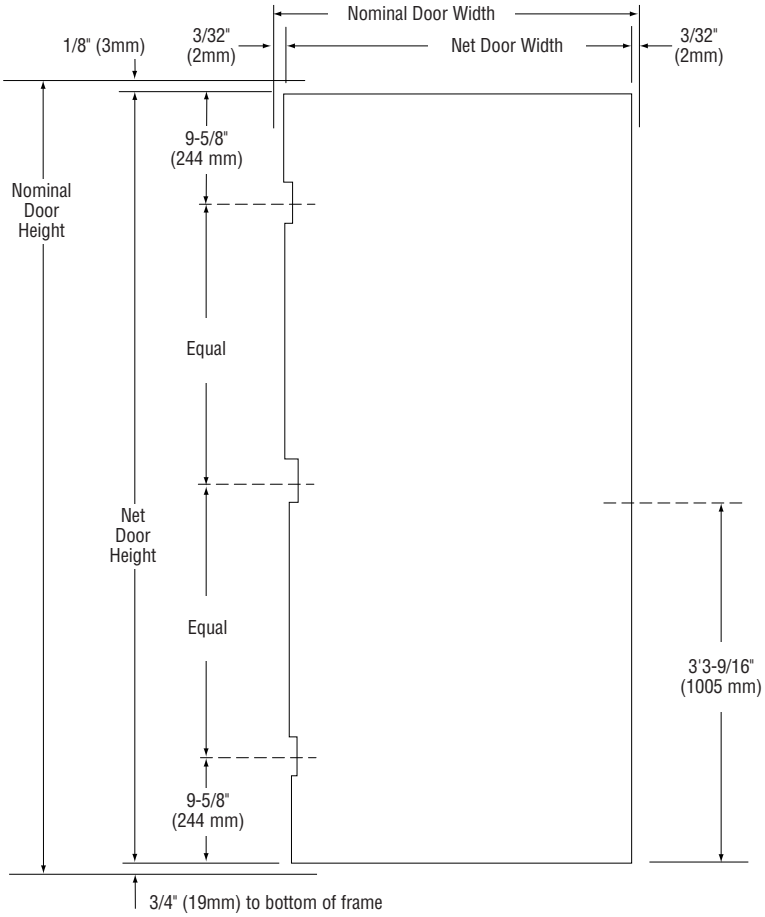

Beveled Edge with Full Height Mechanical Interlock

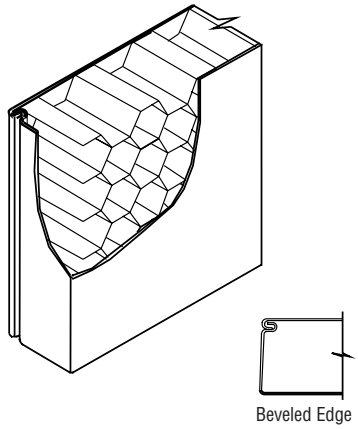

Inverted Top & Bottom Channels 14 Gage

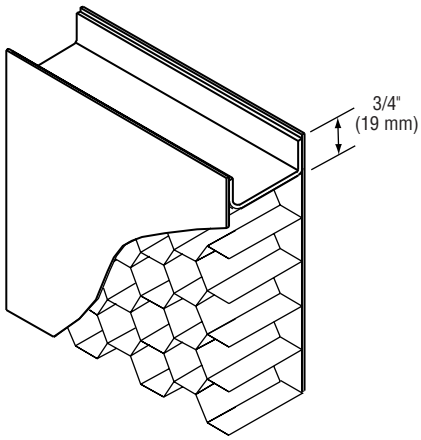

CONSTRUCTION NOTES:

1. **Doors** are 1¾" (45mm) thick.
2. **Door opening size maximum:**
   Single door opening size 4'0" x 10'0" (1219mm x 3048mm)
   Double door opening size 8'0" x 10'0" (2438mm x 3048mm)
3. **Standard operating clearances** *(installed in frame)***:**
   Head = ⅛" (3mm) to bottom of head or transom panel
   Hinge and lock side = 3⁄32" (2mm) to rabbet on jamb
4. **Standard core system:**
   1" (25mm) cell Kraft honeycomb core is laminated to both face sheets with contact adhesive. The honeycomb is phenolic resin impregnated and sanded to insure ultimate lamination and performance. To further enhance the structural stability of the door the honeycomb core material is subjected to several unique operations prior to assembly. If any of these operations are eliminated, the strength and durability of the door is compromised.
5. **Hardware preparations:** to meet specifications, doors can be prepared for all commercial mortised hardware, and can be factory reinforced for surface applied hardware applications.
   - **Lock preps** – details and dimensions shown are for cylindrical (ANSI 115.2) type locks. For mortise (ANSI A115.1) locks, the centerline of the lock is located ⅜" (9mm) lower.

Universal Mortise Hinge Prep

4½" – Standard 5" – Optional

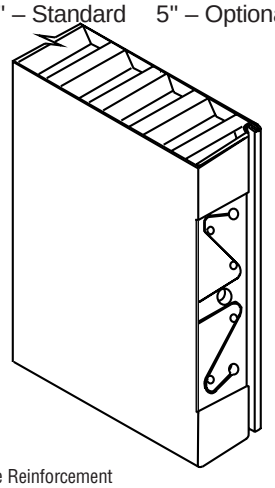

7 Gage Hinge Reinforcement

Lock Prep

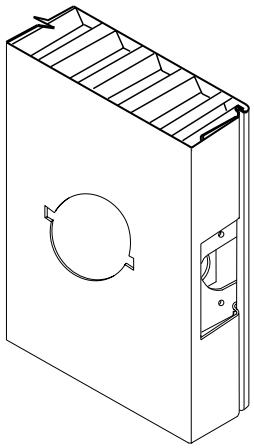

161 Cylindrical Lock shown

Gage Closer Reinforcement

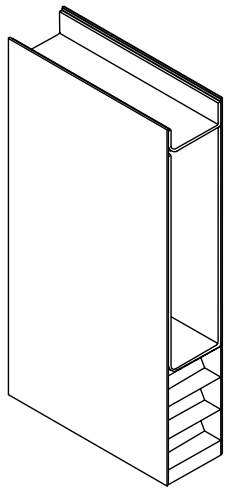

Optional Snap-In Top Cap

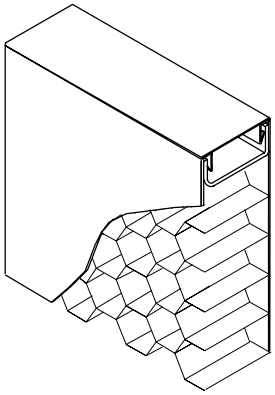

Rigid Honeycomb Core

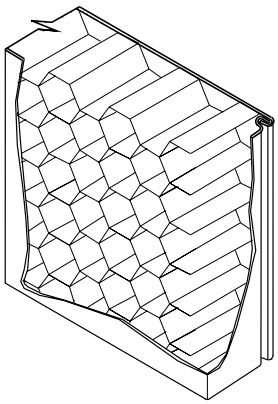

GENERAL NOTES:

1. **Edge construction**:
   - Vertical edges (both hinge and lock) are beveled with a visible seam.
   - Top and bottom edges are closed with inverted 14 gage welded channels. Exterior applications require the addition of snap-in top caps to protect against the weather.
2. **Optional edge seams** available in the L-Series door construction are as follows:
   - **LF** – The mechanical edge seam is filled and finished prior to applying the factory primer.
   - **LW** – The mechanical edge seam is welded and finished prior to applying the factory primer.
3. **Optional cores** available in the L-Series door construction:
   - **Polystyrene** for exterior applications in extreme weather conditions.
   - **Polyurethane** for exterior applications in arctic weather conditions. Not Fire Rated.
4. **Standard hardware preparations**: standard mortised and reinforced for:
   - **Universal hinge preps** – 4½"(114mm) patented preparation which allows easy and quick field conversion from standard to heavy weight hinges.
   - **Locks** – A multitude of standard lock preps are available. The most commonly used with a 4⅞" (124mm) strike are 161, 61L and 86.

INSTALLATION:

1. Installation shall conform to the published Steelcraft installation instructions, SDI 105 *Recommended Installation Instructions for Steel Frames*, and ANSI/DHI A115-IG *Installation Guide for Doors and Hardware*.
2. Fire Rated Assemblies must be in accordance with NFPA Pamphlet 80. The *Authority Having Jurisdiction* is the final authority in issues related to the installation and use of installed Fire Rated Doors.

DOOR EDGE APPLICATIONS:

The L-Series Doors are used in virtually all buildings and construction applications. The application and functionality dictate the door edge construction specified.

Edge	Usage	Application
L	Heavy & Extra-heavy duty	High traffic in all commercial applications
LF	Heavy & Extra-heavy duty	High traffic, in sanitation conditions
LW	Heavy & Extra-heavy duty	High traffic, in sanitation and high abuse conditions

CONVERSION CHART

ANSI A250.8 (SDI 100) *Recommended Specification for Standard Steel Doors and Frames*.

Series	Level	Model	Description	Edge Construction
L18	2	1	Full Flush	Full height, visible mechanical interlocked edge
LF18	2	2	Seamless	L-Series with epoxy filled edge seams
LW18	2	2	Seamless	L-Series with welded edge seams
L16	3	1	Full Flush	Full height, visible mechanical interlocked edge
LF16	3	2	Seamless	L-Series with epoxy filled edge seams
LW16	3	2	Seamless	L-Series with welded edge seams

DOUBLE DOOR APPLICATIONS:

L-Series doors are available in double door elevations, with active and inactive leaves and an overlapping astragal.

- **Standard operating clearances** *(installed in frame)*:
  - Head = ⅛" (3mm) to bottom of head or transom panel
  - Hinge side = 3⁄32" (2mm) to rabbet on jamb
  - Meeting edges = 3⁄32" (2mm) with or without astragal. For openings without an astragal, a wide inactive leaf is used.
  - Bottom = ¾" (19mm) to bottom of frame

Double Door Elevation

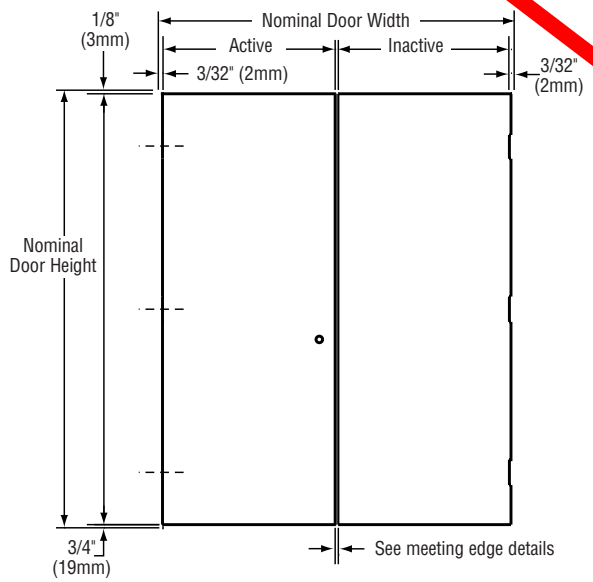

- **Meeting edges**:
  - 14 Gage astragal is furnished loose for installation in the field by others.
  - Overlapping astragal kits are available to convert an active leaf to an inactive leaf.
  - When an astragal is not used, the width of the inactive leaf is increased 3⁄32" (2mm).
- **Hardware preparations**: the inactive leaf can be prepared for hardware as specified.

MEETING EDGE DETAILS:

Typical Astragal 14 Gage

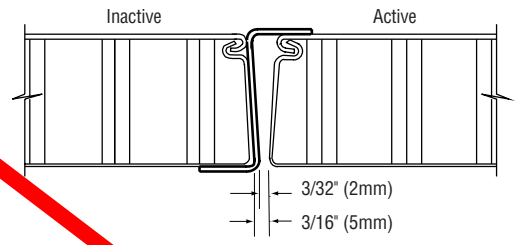

Pair without Astragal

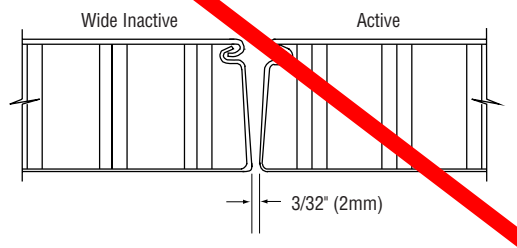

EXPI-DOOR® SYSTEMS INC. Pre-assembled, Ready to Install Door Systems

Knock-Down Drywall, Friction-Fit Anchor Frame Assembly & Installation Instructions

****THIS METHOD OF FRAME INSTALLATION REQUIRES THAT YOUR OPENING BE 1" LESS THAN YOUR FRAME OVER-ALL DIMENSIONS, OR 1" GREATER THAN YOU DOOR LEAF DIMENSIONS****

EXAMPLE: 3'0" X 7'0" DOOR OPENING: FRAME OVER-ALL = 40" X 86" / OPENING SHOULD BE 38" X 85"

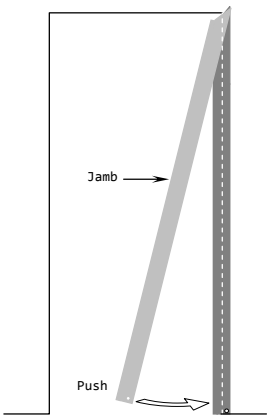

PROCEDURE:

STEP 1

A. Begin installation by pushing the top of one jamb over the wall.

B. Hold the top in place then push the bottom in towards and over the wall.

STEP 2

A. Position frame head over the wall.

B. Align head tabs with jamb slots then slide head towards jamb and engage tabs in slots.

STEP 3

A. Push the top of the remaining jamb over wall and mate jamb slots and head tabs.

B. Push the bottom of this jamb in towards and over the wall.

C. Level the head.

STEP 4

A. Insert screw driver into top plumb anchor screws. Alternately adjust top plumb anchors until they bear firmly against studs, and the header is firmly fitted in place. Distance between jambs must be 36" for 3' door, 72" for double-door, and so on.

B. Plumb hinge jamb and fasten at sill. There are two options for this fastening point. Your Quoter or Vendor should have asked you which option you wish to use: Sill Strap Anchors, or Punch & Dimple w/Screw. (Screw by others)

C. Place a temporary wood spreader between jambs at sill. Adjust both jambs to fit firmly against spreader and fasten at bottom of each jamb face to wall framing sill member.

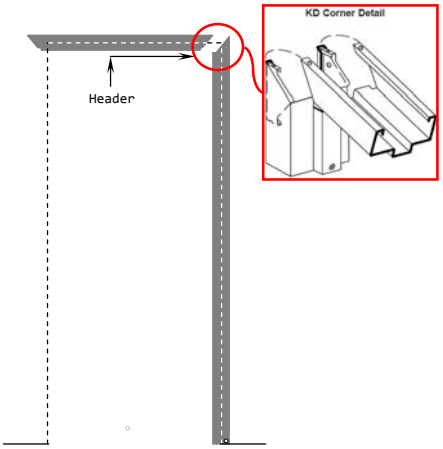

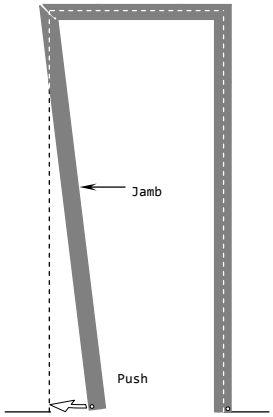

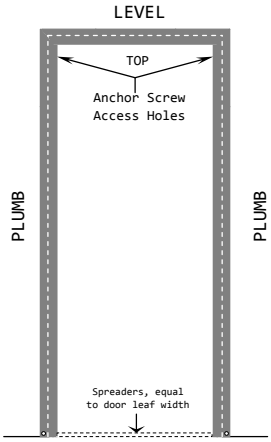

Sill Attachment Options:

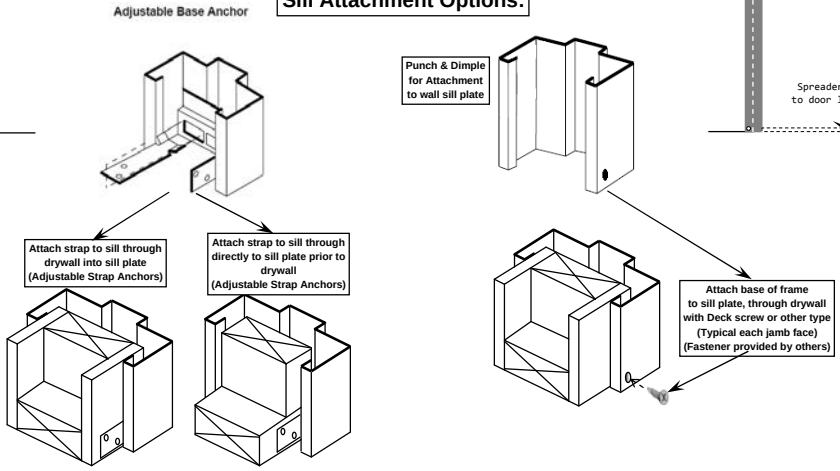

STEELCRAFT®

DW16-SERIES EASY-SET™ DRYWALL FRAMES

HD

ABOUT THE PRODUCT:

The DW16-Series Easy-Set Drywall Frames are designed for heavy duty applications in both commercial and institutional buildings. They can be installed in rough openings after the wall is up and finished. These frames are installed in virtually all types of buildings in all interior drywall wall partition locations using baseboards. To accommodate the installation of the DW-Series Frames on finished drywall construction, they are supplied with the wedge-lock KD (knock-down) corner for quick installation.

APPLICATIONS:

The DW16-Series Easy-Set Drywall Frames are typically used in the following types of wall constructions:

Wall Construction	Application	Typical Wall Anchors
Wood stud	wrap	Compression jamb and adjustable base anchor systems
Steel stud	wrap	Compression jamb and adjustable base anchor systems
Masonry	Not recommended	
Existing masonry	Not recommended	

FEATURES AND BENEFITS:

Steelcraft's DW16-Series Easy-Set Drywall Frames offer the following unique features which enhance long-term functionality and durability.

1. **Quick and flexible installation** of Steelcraft's DW16-Series Easy-Set Drywall Frames facilitates their installation in minutes and they can be relocated without damage to the frame.
2. **Die-mitered corner connections** of the DW16-Series corners lock together once the frame is installed. The tab/lock design prohibits the head from raising and keeps the head and jamb members in alignment and the miter tight.
3. **Adjustable base anchors** allow for attachment directly to the wall sill runner, and facilitates installation adjustment when the floor is not level.
4. **Rubber silencers** are factory installed.
5. **Factory applied baked on rust inhibiting primer** in accordance with ANSI A250.10.

SPECIFICATION COMPLIANCE:

1. Overall frame construction for the Steelcraft DW16-Series Easy-Set Drywall Frames meet the requirements of ANSI A250.8-1998 (commonly referred to as SDI-100).
2. Hardware preparations and reinforcements are in accordance with ANSI A250.6-1997. Locations are in accordance with ANSI/DHI A115.

FIRE RATINGS:

The DW16-Series Easy-Set Drywall Frames meet the broadest fire rating requirements. They are listed for installations requiring compliance to both negative pressure testing (ASTM E152 and UL-10B) and positive pressure standards (UBC 7-2 and UL-10C). Refer to the "Fire Rated" section of the Steelcraft Spec Manual for particular listings.

DRYWALL FRAMES

Steel Thickness	Opening	Usage Frequency[1]	Applications
16 gage (1.3mm)	Interior	Heavy duty	• 20 & 18 gage steel doors • Commercial grade wood doors

Steel Type	Opening	Applications
Non Galvanneal[3]	Interior	• Typical building conditions
Galvannealed[2]	Interior	• Used in locations with high humidity

MATERIAL:

The DW16-Series Easy-Set Drywall Frames are supplied in 16 gage (1.3mm) steel. Depending on environmental and usage conditions the steel can be either non galvanneal or galvannealed. All frames are supplied with a factory applied baked on primer for field applied finish paints.

[1] Usage frequency is based on ANSI A250.8-1998
[2] Reinforcements for galvannealed frames are also galvannealed
[3] Commercial quality carbon steel

IR Security & Safety®
Proven Source. Proven Solutions.™

Details are subject to change without prior notice.

© 2000 Steelcraft Co.
Printed in USA

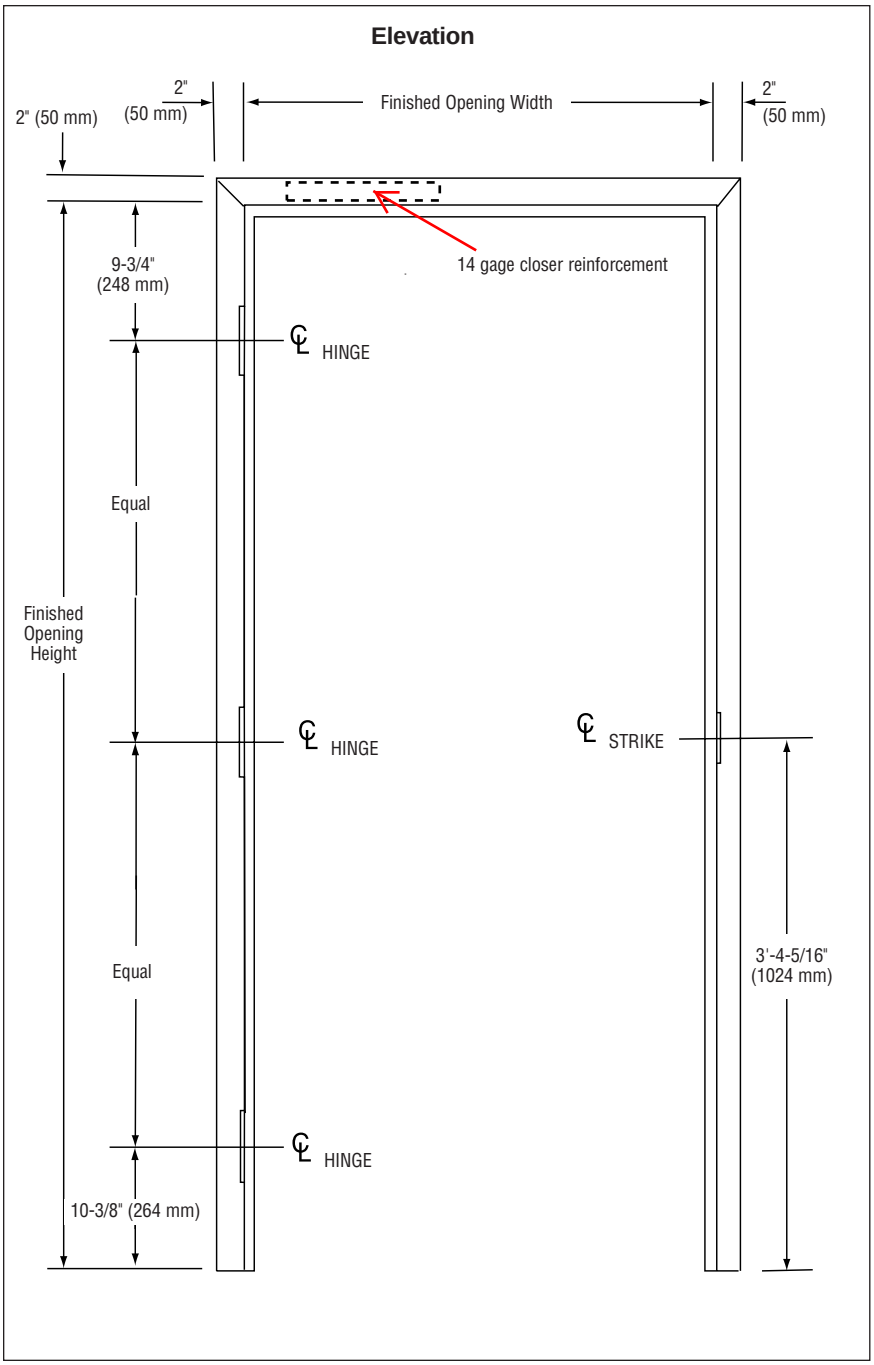

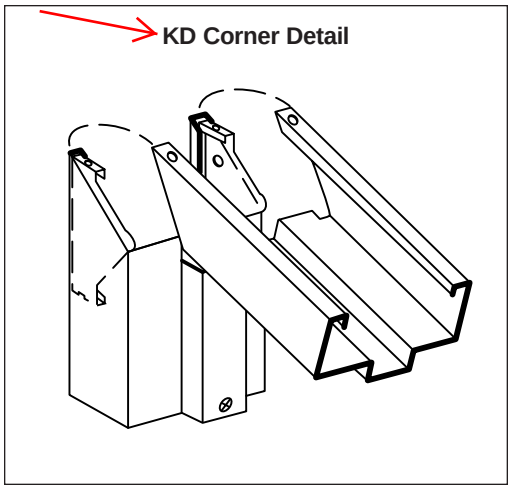

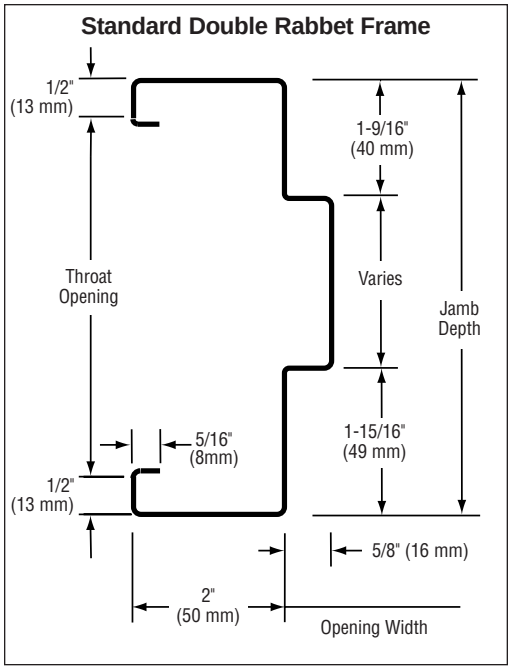

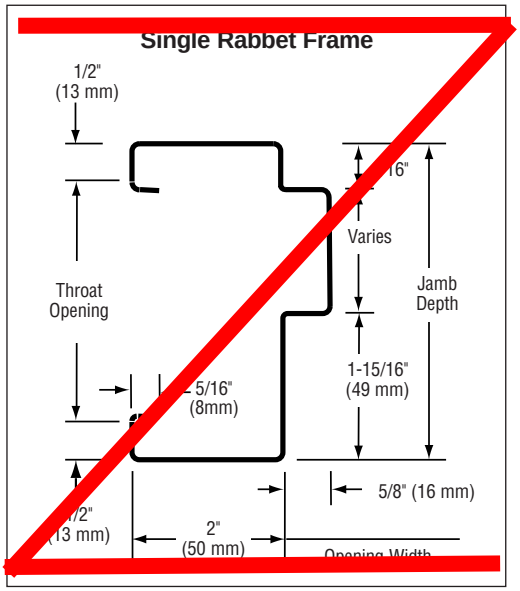

CONSTRUCTION NOTES:

1. **Door opening size maximum:**
   Single door opening size 4'0" x 8'10" (1219mm x 2692mm)
   Double door opening size 8'0" x 8'10" (2438mm x 2692mm)
2. **Jamb depths (profile) availability:**
   Single rabbet:
   minimum = 3¼" (83mm)
   maximum = 4⅝" (117mm)
   Double rabbet:
   minimum = 4¾" (121mm)
   maximum = 9" (229mm)
3. **Standard profile dimensions (variations not available):**
   Face = 2" (50mm)
   Stop = ⅝" (16mm)
   Returns = ½" (13mm)
4. **Standard die-mitered corners:**
   Wedge lock corners with interlocking soffit tab.

Mortise Hinge Prep

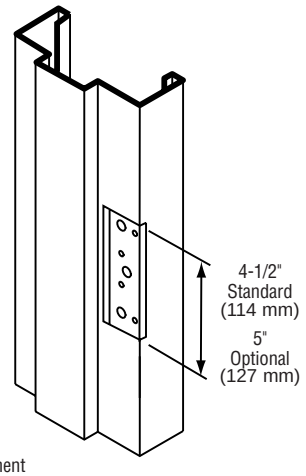

7 Gage Hinge Reinforcement

4⅞" Strike (ASA)

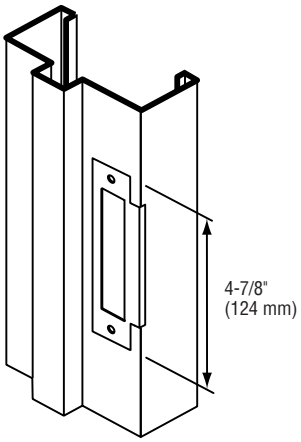

Rubber Silencer

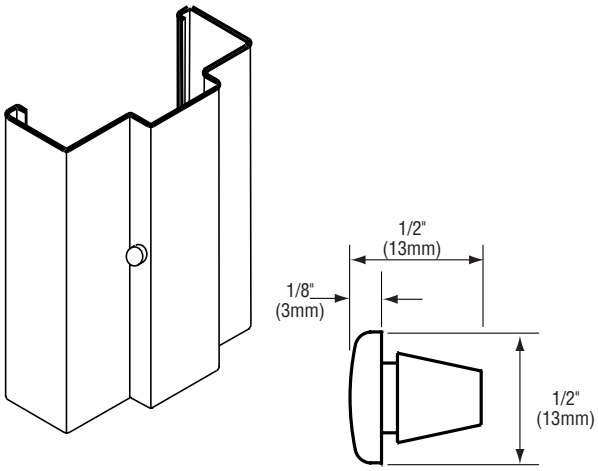

4" Head

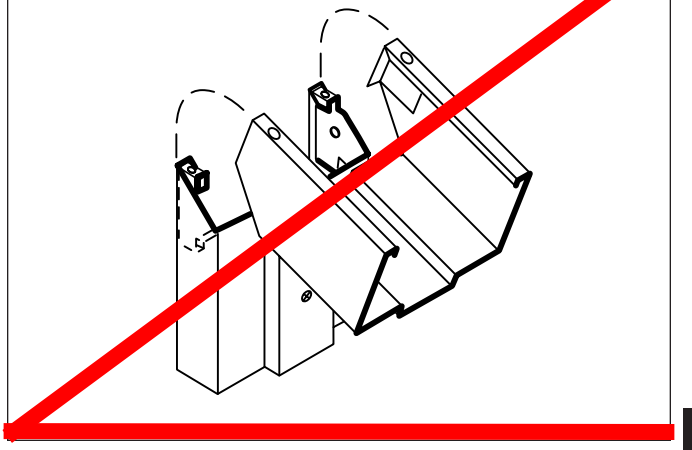

GENERAL NOTES:

1. **Frame profile –** variations in jamb depths available in ⅛" (3mm) increments:
   Single rabbet – typically for walls less than 3¾" (95mm) thick (2" min.[51mm])
   Double rabbet – typically for walls 3¾" (95mm) thick and over
2. **Corner connections**
   - **KD (knock-down)** – factory die-mitered, soffit tab included. Corner clip assembly screws are required on labeled frames and all 4" heads.
   - **SUA (set-up and welded**) – are not available in this frame series.
3. **4" (102mm) heads** – die-mitered for use with 2" (50mm) face double rabbet jambs.
4. **Standard hardware preparations:**
   Standard mortised and reinforced for:
   - **Hinge preps** – 4½" (114mm) high, .134 weight hinges are standard. The .180 heavy weight hinges are available when specified.
   - **Strikes** – 4⅞" (124mm) conforming to ANSI A115.1 and ANSI A115.2
5. **Rubber silencers:** are factory installed to cushion the closing of the door. Three (3) silencers are supplied per strike jamb and two (2) per double door head.

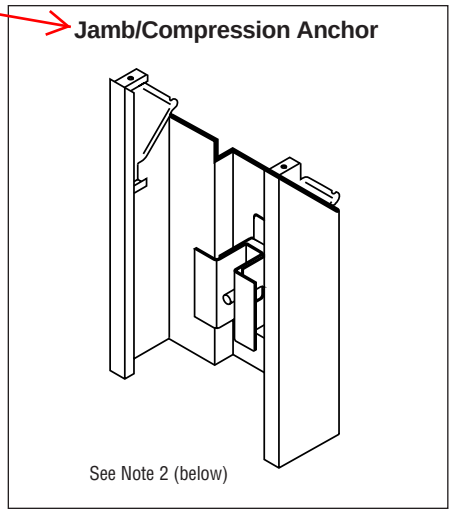

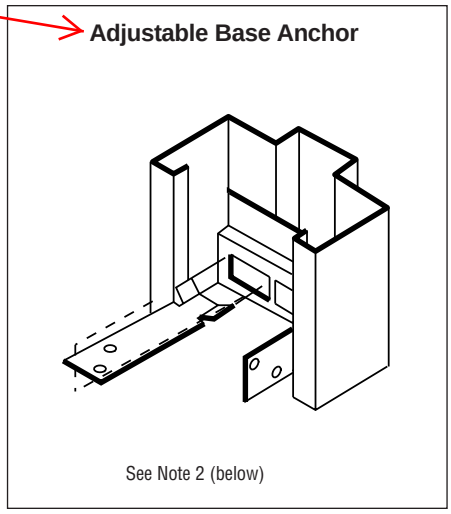

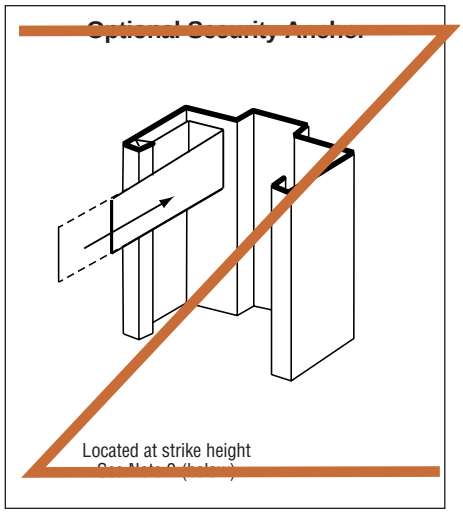

ANCHORING AND INSTALLATION NOTES:

1. **DW16-Series Easy-Set Drywall Frames** are supplied standard with field adjustable compression anchors in each jamb and adjustable base anchors. DW-Series Frames are designed especially for use in installations using wall baseboards.
2. **Anchoring applications:**
   - **Masonry wall** – Not recommended
   - **Wood and steel stud walls** – Adjustable compression anchors are factory located near the top of each jamb. These anchors can be easily adjusted with either a screw driver or power driver. Adjustable lock-in base anchors are provided for attachment directly to the wall floor (sill) runner. (Refer to installation sheet #INS-2036)
   - **Optional security anchor** – Security anchors are recommended in frames over 8'0" (2438mm) high or in frames installed in areas where security is a priority. Locate the security anchor immediately above or below the strike reinforcements, and on both faces fo the jamb. Anchors may be used in both the strike and hinge jamb. Also recommend to be used in the head of frames for pairs.
3. **Grouting of the DW-Series Frames is not recommended.**
4. **Installation Caution Notice** – After the frame pieces are slid over the wall, the frame is squared by adjusting the compression anchor screws located in the soffit of the jambs. Turning the screw clockwise will tighten the frame. Check to insure the opening is plumb.
5. Installation shall conform to the published Steelcraft installation instructions, SDI 105 *Recommended Installation Instructions for Steel Frames* and ANSI/DHI A115-IG *Installation Guide for Doors and Hardware*.
6. All fire rated frames must be installed in accordance with NFPA Pamphlet 80 and the *Authority Having Jurisdiction.*

Crestline
Windows & Doors

VinylCrest 200
Sliding Patio Door & French Sliding Patio Door
Installation Instructions

Includes Instructions For: Door and Frame Reversal,
Optional J-Channel, Brick Mould and Jamb Extension (ordered separately)
[Includes Instructions to Maintain Design Pressure Test Ratings]

IMPORTANT: Please read before you begin.

Crestline
Windows & Doors

VinylCrest 200 Sliding Patio Door & French Sliding Patio Door Installation Instructions

IMPORTANT: Thoroughly read and follow these instructions, failure to install as recommended will void any warranty, expressed or implied. **Check building codes for the area in which the doors or windows are being installed before installation to insure proper compliance.** The installation instructions that follow are based on typical frame construction. Specific applications may differ. SNE Enterprises, Inc. recommends that you consult a qualified installation professional. SNE Enterprises, Inc. is not responsible for installation.

IMPORTANT: A number of jurisdictions have adopted building code design pressure requirements that require window and door products be installed in the same way they were installed for laboratory testing. To comply with these requirements, we are pleased to supplement the installation instructions with the following:

IMPORTANT: If you are installing window or door products in a jurisdiction requiring that the products be installed in the same way they were installed for laboratory testing, you should do the following:

- Apply a generous bead of silicone sealant on the back side of the nailing fin or brick mould.
- When sealant is applied to the rough opening it must be applied directly to the building's sheathing and not the building wrap.
- Exterior house wrap must be cut and temporarily taped back away from rough openings.
- The nailing fin or brick mould must contact the sealant continuously along the entire perimeter of the unit and must fully contact exterior face of the wall around the window or door's entire perimeter.
- Exterior housewrap must be trimmed and reapplied over the nailing fin. It must be sealed to the fin along the entire perimeter with silicone sealant.
- For brick mould units, housewrap must be trimmed and reapplied so it butts tightly to the brick mould. Cut edges of housewrap must be sealed around the entire perimeter of the window or door.

Refer to the chart on the following page to select a fastening method that meets test specifications.

A Note About Door Operation

Determine Door Operation

Patio door operation is viewed from the exterior of the unit **(FIGURE 1)**. Reversible patio doors are factory set-up so the inactive panel is on the left side and the active panel is on the right side.

If you wish to have the left panel active instead, the door frame, inactive panel, sliding panel and hardware must be reversed **before** installing unit in rough opening. See Table of Contents on Page v to find location of specific information.

Only 6-8 doors are reversible.

FIGURE 1

STANDARD DOOR SET-UP (Viewed From Exterior)

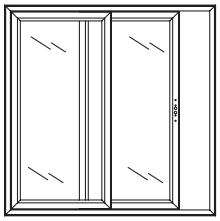

INACTIVE PANEL | **SLIDING (ACTIVE) PANEL**

SNE Enterprises, Inc. reserves the right, as necessary, to change product specifications, installation procedures, materials, prices and terms of purchase without notice.

Design Pressure Performance – Fastening Method

Vinyl Doors With Pre-Punched Fastener Holes

Unit Description	Fastener	How to Fasten
Nailing Fin with Pre-Punched Fastener Holes / No Brick Mould See FIGURE 1 on Page iv.	#8 Steel screws long enough to penetrate framing material by at least 1-1/2".	Start a screw 4" in from corner and apply through nailing fin into framing member. Space additional screws every 4" on center, around entire perimeter, staying 4" from each corner.
Welded Brick Mould with Nailing Fin with Pre-Punched Fastener Holes – See FIGURE 2 on Page iv.	If pre-punched fastener holes are not present in brick mould nailing fin or frame nailing fin, at 4" from each corner and 4" on center thereafter, pre-drilling pilot holes will be necessary. Drill a 5/64" pilot hole in brick mould. Start 4" from corner and space holes 4" on center around entire perimeter staying at least 4" from each corner.	Apply screws through each pilot hole and tighten firmly. Screws must be no more than 4" on center from each other. Do not over-tighten. Seal all fastener heads with silicone sealant.

INSTALL NOTES:

A shim space, not to exceed 1/4", is required. If a shim space greater than 1/4" exists on the interior or exterior of the unit, use solid material to fill this space until the maximum 1/4" shim allowance is achieved.

ADDITIONAL NOTES:

- **Doors do not require a 1/4" shim space at the sill.**
- For brick mould units, or any installation that has exposed fasteners, it is recommended to use fasteners made of 300 series stainless steel. Follow your local codes if they specify a different series of stainless steel.
- Certain options, accessories and warranty considerations require the unit be installed using installation clips. The clip install method has not been tested for design pressure ratings and should not be used where design pressure ratings must be maintained. Contact your customer service representative for additional assistance.

Design Pressure Performance – Nailing Fin and Brick Mould Configurations

VINYL DOORS

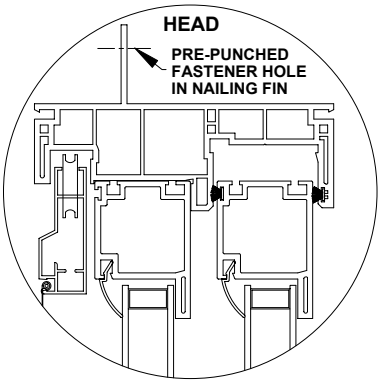

SIDE VIEW
WITH NAILING FIN / NO BRICK MOULD
FIGURE 1

VINYL DOORS

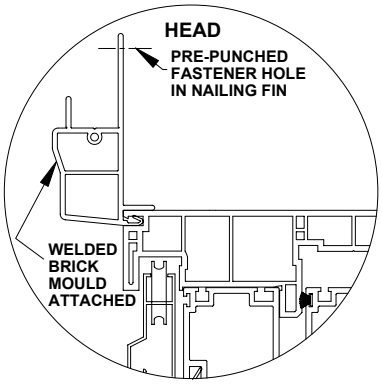

SIDE VIEW
VINYL WELDED BRICK MOULD
WITH NAILING FIN FIGURE 2

TABLE OF CONTENTS AND TOOL / MATERIAL REQUIREMENTS

START PAGE

Preserving Design Pressure Test Ratings ii

A Note About Door Operation ii

Design Pressure Performance – Fastening Method (chart) iii

Design Pressure Performance – Nailing Fin and Brick Mould Configurations iv

Safety Alert Symbol; Definition DPR and non-DPR vi

Rough Opening Preparation For DPR and Non-DPR 1
Measuring Tape & Level

Straighten and Level Subfloor For DPR and Non-DPR 2
Level, Hammer, Nails, Nailset, Plane

Sill Preparation For DPR and Non-DPR 3
Weather Barrier Self-Adhering Tape (Ice Storm Shield), Utility Knife, Measuring Tape, Rubber Roller, Caulk, Caulking Gun

Housewrap & Caulking Rough Opening Details For Preserving Design Pressure Ratings On Structure With Housewrap 4
Measuring Tape, Clear Silicone Sealant, Caulking Gun, Utility Knife, Cloth Tape

Door Installation For DPR and Non-DPR 5
Measuring Tape, Hammer, #8 Steel Screws (long enough to penetrate framing material at least 1½"), Electric Drill w/Screwdriver Bit, Pry Bar, Shims, Straight Edge, Level

Housewrap & Caulking Finishing Details For Preserving Design Pressure Ratings On Structure With Housewrap 7
Utility Knife, Scissors, Cloth Tape, Clear Silicone Sealant, Caulking Gun

Weather Barrier Self-Adhering Tape Application 8
Weather Barrier Self-Adhering Tape (Ice Storm Shield), Utility Knife, Measuring Tape, Rubber Roller

Straighten the Interior 9
Measuring Tape, Shims, Level, Fiberglass Insulation, Hammer, Pry Bar

Removing Screen; Installing Screen Guides; Installing Screen 10
Phillips Head Screwdriver

Screen Adjustment; Installing Screen Keeper 11
Measuring Tape, Pencil, Phillips Head Screwdriver

Remove & Install Sliding Panel; Adjust Sliding Panel 12
Stiff-Bladed Putty Knife, Phillips Head Screwdriver

Reversing Door Frame 13
Stiff-Bladed Putty Knife, Phillips Head Screwdriver, Needle Nose Pliers, Pry Bar

Reversing Sliding Panel 15
Stiff-Bladed Putty Knife, Phillips Head Screwdriver, Rubber Mallet, Wooden Block

Reversing Door Lock 19
Phillips Head Screwdriver, Slotted Screwdriver

Install Lock Keeper 20
Phillips Head Screwdriver, Measuring Tape, #2 Pencil or Carpenter Pencil

OPTIONAL INSTALLATIONS

J-Channel - Measuring Tape, Hacksaw, Utility Knife, Rubber Mallet 21

Brick Mould - Measuring Tape, Hacksaw, Utility Knife, Caulk Gun, Rubber Mallet, ... 22
High-Quality Exterior Neutral Cure Clear Caulk, Electric Drill w/ Drill & Screwdriver Bits, #7 x 1-1/4" Stainless Steel Flathead Screws, Phillips Head Screwdriver, Shop Towels, Denatured Alcohol

TABLE OF CONTENTS AND TOOL / MATERIAL REQUIREMENTS *(continued)*

START PAGE

OPTIONAL INSTALLATIONS *(continued)*

Jamb Extension - Measuring Tape, Hacksaw, Utility Knife, Rubber Mallet, Electric Drill with Drill & Screwdriver Bits, #7 x 1-1/4" Stainless Steel Flathead Screws, Combination Square 25

Field Stacking – Adding Transom 27
Utility Knife, Measuring Tape, Tin Snips, Locking Pliers, Silicone Sealant, Caulking Gun, Hacksaw, Level, Drill With Drill Bits and Screwdriver Attachment, Metal Brackets, Screws, Shop Towels, Denatured Alcohol

Mull Strips - Configuration, Measuring & Cutting, Installation 29
Measuring Tape, Hacksaw, Utility Knife, Tin Snips, High Quality Exterior Neutral Cure Clear Caulk, Caulk Gun, Rubber Mallet, Shop Towels, Denatured Alcohol, Universal Mull Strips

Turn Units Over 30

Recommended Finishing Instructions for Vinyl, Aluminum or Wood; Products With Synthetic Stucco 31

Recognize this symbol. This is the Safety-Alert symbol. When you see this symbol be alert to the potential for personal injury or product damage.

DANGER

Falling from window or door opening may result in serious injury or death. DO NOT leave openings unattended when children are present.

DANGER

CUT HAZARD

*Non-safety Glass.
*May cause serious injuries if broken.
*Do not install where tempered safety glass is required.

WARNING

Weight of window and door unit(s) and accessories will vary. Use a reasonable number of people with sufficient strength to lift, carry and install window or door unit(s) and accessories. Always consider site conditions and use appropriate techniques when installing.

DANGER

Screen will not stop children, any one or anything from falling out window or door.

Keep children and objects away from open window.s or doors.

Definition:

Throughout these instructions DPR equals "For Design Pressure Rating". Any procedure so titled must be completed to maintain the rating validity.

Non-DPR is for installations not requiring maintenance of design pressure ratings. In this case you can follow procedures for either DPR or non-DPR.

IMPORTANT:
When accessories such as jamb extension have been ordered, apply according to the directions on pages 21 through 26 BEFORE you install the unit OR prep the rough opening.

Rough Opening Preparation

FIGURE 1

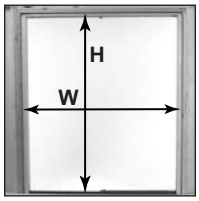

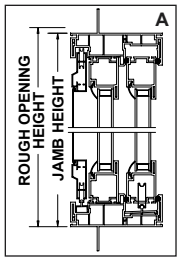

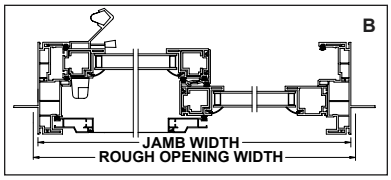

FIGURE 2

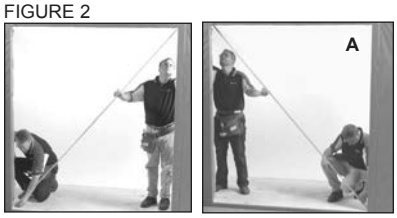

FIGURE 3

SAFETY INSTRUCTIONS

Read installation instructions completely before beginning procedure.

WARNING

Wear gloves, safety glasses, goggles or eye shields appropriate to procedure.

Before you begin, check the following:

IMPORTANT:
High-quality, exterior, neutral-cure, clear, silicone sealant (compatible with vinyl extrusion and exterior face of the wall) is to be used for all procedures in the following instructions which call for caulking or sealant.

IMPORTANT:
Check to make sure you have the correct door type and the correct size door (Width and Height) for your rough opening (FIGURE 1, 1A, 1B).

1. Measure the rough opening to ensure that it is not more than 1/2" taller in overall **H**eight or 1/2" wider in overall **W**idth **(FIGURE 1)** than Jamb Height or Width **(FIGURE 1A & 1B)** except when brick mould or jamb extension are applied. See Page 21 and 25.

IMPORTANT: If unit is to meet design pressure ratings, a maximum 1/4" shim space is required around perimeter. A shim space greater than 1/4" could result in lower product performance and may be considered non-compliant with certain building codes.

NOTE: Doors do not require 1/4" shim space at the sill.

2. Make sure walls are plumb and not twisted. Make necessary corrections where possible to ensure walls are plumb and straight **(FIGURE 3)**.

Straighten & Level Subfloor

FIGURE 1

1. Masonry installation requires a 2 x 6 sill plate to be present. Check sill for level **(FIGURE 1)**.

WARNING

Improper use of hand and power tools could result in personal injury and/or product damage. Follow equipment manufacturers' instructions for safe operation. Always wear safety glasses.

FIGURE 2

2. To straighten and level the subfloor, identify the areas that are above level and countersink nails in the floor area that will be under the door **(FIGURE 2)**.

FIGURE 3

3. Check for level as in (FIGURE 1). Plane area that will be under the door until it is straight and level **(FIGURE 3)**.

Sill Preparation

FIGURE 1

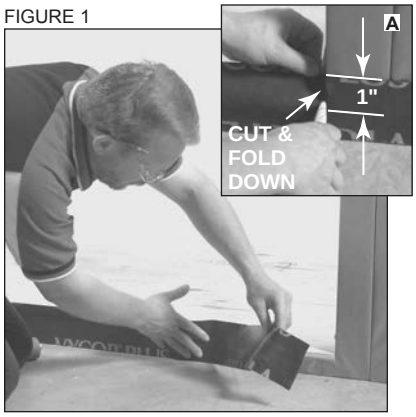

FIGURE 2

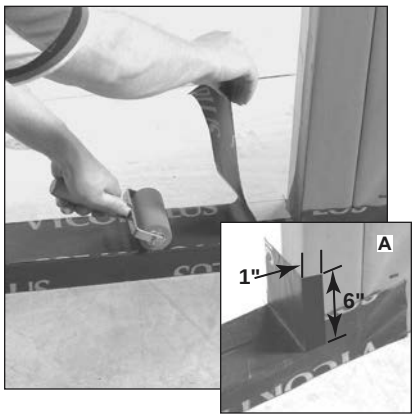

FIGURE 3

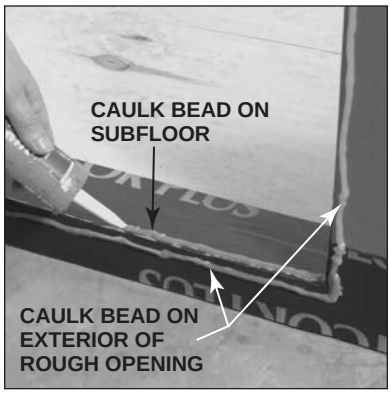

NOTE: If your structure has housewrap see the illustrations on Page 4 for installation techniques to preserve design pressure test ratings. Also perform steps in **Straighten & Level Subfloor** on Page 2.

If preserving design pressure test ratings are not a concern proceed as follows:

1. Cut a piece of weather barrier self-adhering tape (ice storm shield) 4" wide and as long as the opening width plus 8" **(FIGURE 1)**. Apply to face of exterior wall so 1" extends above the opening and 4" extends beyond each side of the opening. Cut along the corners of rough opening and fold down onto the sill **(FIGURE 1A)**.

WARNING

Improper use of hand and power tools could result in personal injury and/or product damage. Follow equipment manufacturers' instructions for safe operation. Always wear safety glasses.

2. Apply a second continuous piece of weather barrier self-adhering tape on the top surface of the rough opening sill. Use a rubber roller to apply barrier to surface **(FIGURE 2)**.

Cut barrier tape the thickness of the wall plus 1" and 12" longer than the width of the opening. Align flush with interior of the wall and extend edge of the tape 1" past the exterior wall surface **(FIGURE 2)**. Start the piece (approximately 6") up the side of the rough opening and run it to the bottom of the opening, to the other side of the opening, and 6" up the other side **(FIGURE 2A)**.

STOP – Read Following Note For Design Pressure Considerations

NOTE: If your structure has housewrap and you must preserve design pressure ratings **DO NOT PERFORM STEP 3 BELOW**. See Page 4 for **required** installation techniques. Step 3 can be used where design pressure ratings are not a concern.
Step 4 below must be done for both DPR and non-DPR installations.

3. Apply a continuous 1/4" bead of high-quality sealant (compatible with vinyl extrusion and exterior face of wall) to the exterior face of the wall located 1/2" from the rough opening edge. The caulk bead must contact the nailing fin continuously on sides and top when the unit is placed into the opening **(FIGURE 3)**.

4. Apply a second bead of caulk on top of the subfloor membrane 1/2" from the walls exterior surface **(FIGURE 3)**.

For DP ratings continue on Page 4; for non-DP continue on Page 5.

Housewrap & Caulking Rough Opening Details For Preserving Design Pressure Ratings On Structure With Housewrap

Although DP illustrations on this page show windows, procedure and techniques are the same for doors.

FIGURE 1

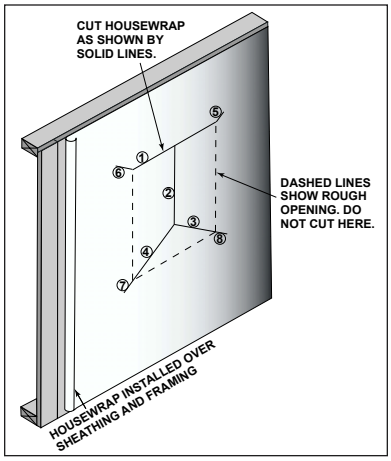

If your structure does not have housewrap, continue on Page 5.

WARNING

Improper use of hand and power tools could result in personal injury and/or product damage. Follow equipment manufacturers' instructions for safe operation. Always wear safety glasses.

1. Cut housewrap in sequence as shown by the circled numerals in **(FIGURE 1)**.

2. Fold housewrap back and tape out of the way **(FIGURE 2)**. Bare sheathing must be exposed.

3. Apply a continuous, generous bead of silicone sealant around entire rough opening perimeter. Locate sealant so it does not intrude into the rough opening and will also provide a continuous seal between sheathing and nailing fin as well as door sill **(FIGURE 3)**.

Proceed to **Door Installation** on next page.

NOTE: If you want to change door operation, so the left panel opens, and the right panel is stationary, **do not install in rough opening yet**. See pages 13 thru 19 for instructions to reverse door operation.

Only 6-8 doors are reversible!

FIGURE 2

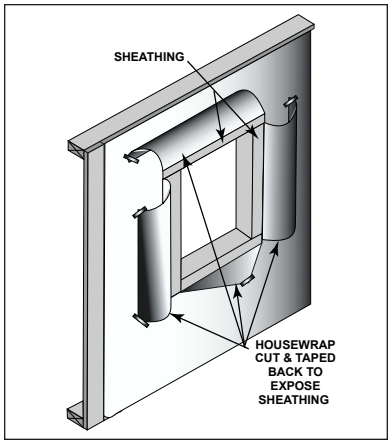

FIGURE 3

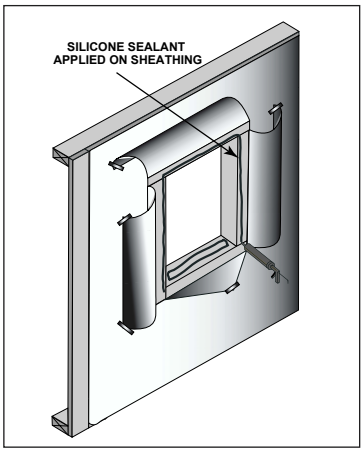

Door Installation

FIGURE 1

FIGURE 2

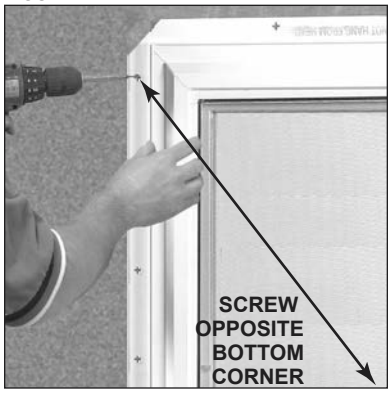

FIGURE 3

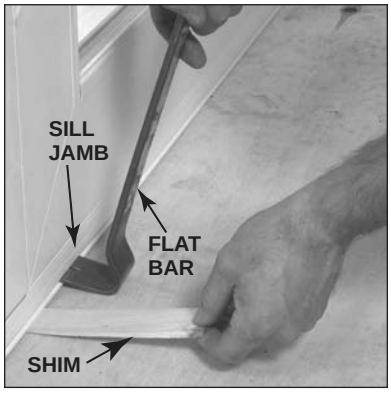

NOTE: If you want to reverse operation, so the left panel opens, and the right is stationary, **do not install in rough opening yet**. See pages 13-20 for reversing instructions. ***Only 6-8 doors are reversible.***

WARNING **Panels are heavy. Use caution when handling to avoid injury or damage. Use adequate number of people to safely handle panel.**

IMPORTANT:

1A. Remove the wood and cardboard used for shipping. DO NOT remove the plastic shipping blocks or open the door.

1B. High-quality, exterior, neutral-cure, clear, silicone sealant (compatible with vinyl extrusion and exterior face of the wall) is to be used for all procedures in the following instructions which call for caulking or sealant.

WARNING

Improper use of hand and power tools could result in personal injury and/or product damage. Follow equipment manufacturers' instructions for safe operation. Always wear safety glasses.

IMPORTANT: If unit is to meet design pressure ratings, a maximum 1/4" shim space is required around perimeter. Unit must be secured with #8 steel screws, long enough to penetrate framing material by at least 1-1/2". See "Design Peressure Perfomance – Fastening Method" chart on Page iii for screw spacing.

2. Immediately center the door into opening **(FIGURE 1)**, after silicone caulk has been applied to the exterior of the rough opening and the subsill per instructions on Page 3 and 4.

3. While holding unit in place, level unit on the interior or exterior across the sill and head. To level the unit, place shims directly below the side jambs only. Place a flat bar underneath the sill, lift slightly, slide shim under sill **(FIGURE 3)**.

4. Secure one side top corner with a #8 steel screw long enough to penetrate framing material by at least 1-1/2" **(FIGURE 2)**.

Continued on next page.

Door Installation (continued)

FIGURE 4

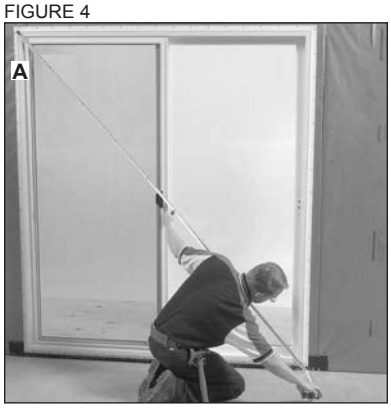

WARNING **Panels are heavy. Use caution when handling to avoid injury or damage. Use adequate number of people to safely handle panel.**

5. Continue holding unit in place. Square and plumb jambs. This can be done from the interior or exterior. Check both side-to-side and inside-to-outside. Measure unit from corner-to-corner to check for square.

IMPORTANT: Take diagonal measurements across outside edges of door frame (FIGURE 4A & B).

6. Use a pry bar to slide bottom of door left or right until diagonal measurements are exactly the same.

7. Secure opposite diagonal corner of unit and check again for level, plumb and square **(FIGURE 4C & 4D)**.

8. Use shims and a straight edge to straighten the side and top jamb. When straight, fasten through the the nailing fin spacing screws as prescribed on Page iii.

9. In a similar manner, straighten the sill and fasten through sill nailing fin. Finish securing unit by applying fasteners around entire perimeter, through nailing fin, as prescribed on Page iii.

Fastener heads should not over-compress the flange.

10. Loosely insulate between the door frame and rough opening.

IMPORTANT: Do not over pack insulation. Do not use expandable foam.

Installation is ready for interior wall finish and trim.

IMPORTANT: Do not allow trim fasteners to penetrate vinyl door frame.

For DP ratings continue on Page 7; for non-DP continue on Page 8.

Housewrap & Caulking Finishing Details For Preserving Design Pressure Ratings On Structure With Housewrap

FIGURE 1

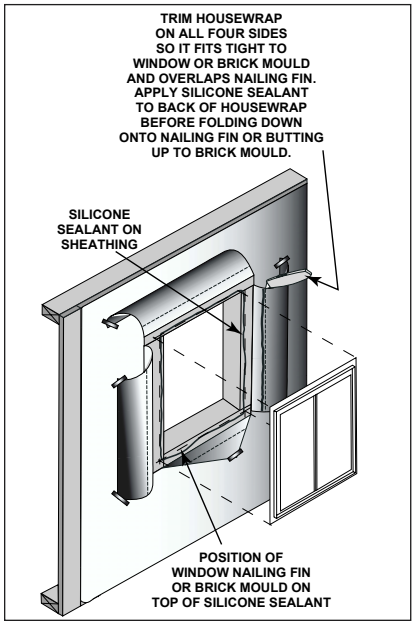

FIGURE 2

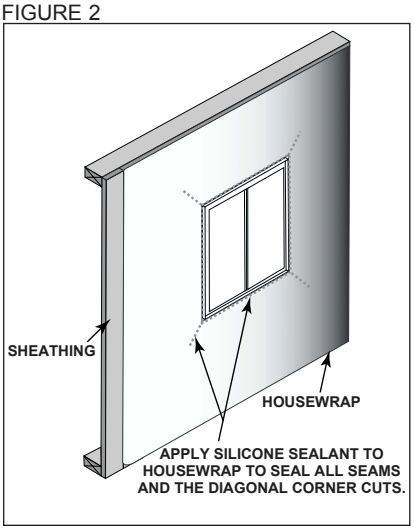

If your structure does not have housewrap continue on Page 8.

WARNING

Improper use of hand and power tools could result in personal injury and/or product damage. Follow equipment manufacturers' instructions for safe operation. Always wear safety glasses.

Trim and reseal housewrap to new door after door is installed according to the instructions on Page 5.

See **(FIGURE 1)** for Steps 1 through 3.

1. One section at a time, untape and fold housewrap over nailing fin and up against door frame. Use a utility knife or scissors and carefully trim housewrap alongside the door frame. When trimmed, housewrap must lay flat against sheathing, overlap the nailing fin, and fit tightly against the door frame. After trimming and dry fitting, tape housewrap back out of the way so bottom side is exposed. Repeat for each section of housewrap.

WARNING Do not cut into vinyl nailing fin or vinyl frame while trimming housewrap. Damage to vinyl may adversely affect structural or water integrity.

2. Apply a continuous bead of caulk to the back side of the housewrap along the edge that will be placed against the door frame. Also caulk along edges of any additional seams and at diagonal corner cuts.

3. Fold each caulked section down onto sheathing, overlapping the nailing fin and butting it tightly to the door frame. Smooth out all wrinkles and bulges.

Repeat Step 2 and 3 for each section.

4. Finish by inspecting each housewrap seam making sure each seam is sealed with silicone sealant **(FIGURE 2)**.

To continue your installation **Proceed to Straighten The Interior** on Page 9.

Weather Barrier Self-Adhering Tape Application

FIGURE 1

FIGURE 2

FIGURE 3

NOTE: The Following **Weather Barrier Self-Adhering Tape** procedures do not apply if you have just completed **Housewrap & Caulking Finishing Details For Preserving Design Pressure Ratings Structure With Housewrap** on previous page. ***Continue your installation on Page 9.***

1. On the exterior, apply a high-quality weather barrier self-adhering tape or equivalent (ice storm shield). Apply to the sides, starting at the top of the head nailing fin and run it down so that it extends past the bottom nailing fin. Tape **must** cover the entire nailing fin, including the installation holes, the joint between the fin and the building's sheathing **and** extend at least one additional inch out onto the sheathing. Use a rubber roller to apply **(FIGURE 1)**.

WARNING

Improper use of hand and power tools could result in personal injury and/or product damage. Follow equipment manufacturers' instructions for safe operation. Always wear safety glasses.

2. Use a utility knife to cut a slit in the building wrap above the head nailing fin, the entire length of the door unit **PLUS** the width of each vertical piece on both sides of the door **(FIGURE 2)**.

3. After cutting the slit above the top nailing fin, slide the high-quality weather barrier self-adhering tape or equivalent under the building paper making sure the tape covers the nailing fin, including the installation holes and the joint between the fin and the building's sheathing **and** extends at least one additional inch out onto the sheathing.**(FIGURE 3)**.

Continue on Page 9.

Straighten the Interior

FIGURE 1

WARNING

Improper use of hand and power tools could result in personal injury and/or product damage. Follow equipment manufacturers' instructions for safe operation. Always wear safety glasses.

1. Shim the top and bottom ends of the side jamb on the left or right to get the diagonal measurements **(FIGURE 1 & 1A)** of the entire door assembly exactly the same.

IMPORTANT:

Straighten and support the mull unit sills with wood shims under the ends of the jambs.

FIGURE 2

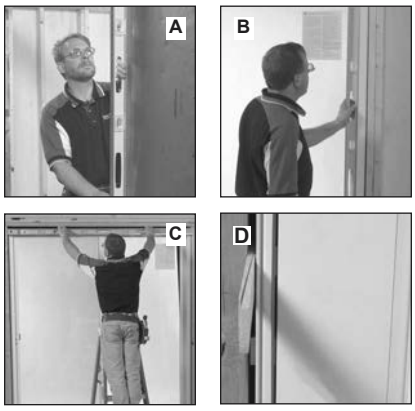

2. Using a level as a straight edge, place shims between the frame and the rough opening to straighten the side jambs **(FIGURE 2D)**.

Removing Screen, Installing Screen Guides
Installing Screen

FIGURE 1

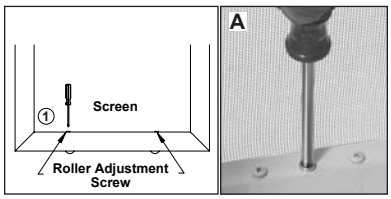

FIGURE 2

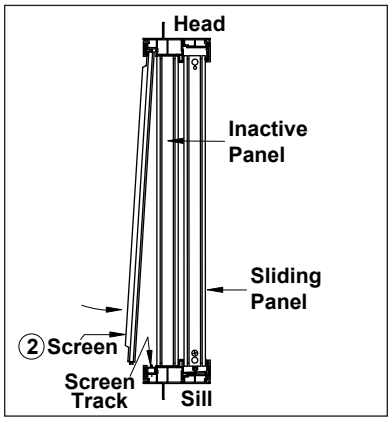

FIGURE 3

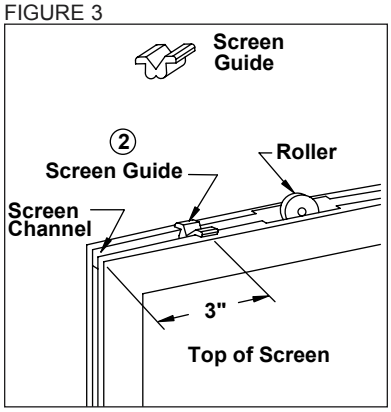

WARNING

Improper use of hand and power tools could result in personal injury and/or product damage. Follow equipment manufacturers' instructions for safe operation. Always wear safety glasses.

Removing Screen

1. Retract top and bottom screen rollers by turning the screen roller adjustment screws counterclockwise with a Phillips screwdriver **(FIGURE 1 & 1A)**.

2. Grasp sides of screen and lift gently until top is fully up into the head frame screen channel **(FIGURE 2)**.

3. While holding screen up into head frame channel, carefully pull screen outward until screen bottom clears bottom channel and top can be slid out of upper channel.

Installing Screen Guides

Two screen guides are included in the screen keeper package. These are used to stabilize the top of the screen in the screen channel, preventing excessive movement and unwanted noise. If screen is already installed, remove screen (see **Removing Screen**).

1. Position guide above top screen channel, about 3" from the end of the screen **(FIGURE 3)**.

2. Press down firmly to snap screen guide into channel.

3. Repeat procedure for other side.

Installing Screen

1. Retract top and bottom screen rollers by turning the screen roller adjustment screws counterclockwise with a Phillips screwdriver **(FIGURE 1 & 1A)**.

2. Grasp sides of screen and lift top into head frame screen channel **(FIGURE 2)**.

3. Carefully push screen inward until it is in place in the frame channel and the rollers are properly positioned on the screen track.

Screen Adjustment

FIGURE 4

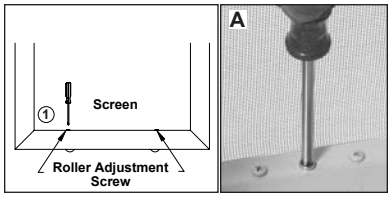

WARNING

Improper use of hand and power tools could result in personal injury and/or product damage. Follow equipment manufacturers' instructions for safe operation. Always wear safety glasses.

Screen Adjustment
To adjust screen for smooth operation use a Phillips screwdriver on the adjustment screw in each screen roller **(FIGURE 1 & 1A)**. Turn clockwise to extend the roller or turn counterclockwise to retract the roller. There are rollers at each corner, both top and bottom. For best results all rollers should be adjusted.

NOTE: To **raise** screen, *top* rollers need to be *retracted* and *bottom* rollers *extended*. To **lower** screen *top* rollers need to be *extended* and *bottom* rollers retracted.

Installing Screen Keeper

FIGURE 5

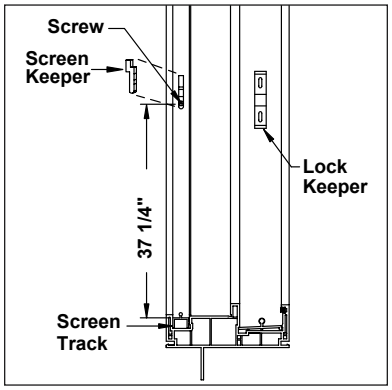

Install Screen Keeper
1. Measure 37-1/4" upward from flat top of screen track and mark the side frame at this point. Mark should be centered in the frame channel **(FIGURE 5)**.

2. Position screen keeper so bottom screw hole is centered over the mark on the side frame.

3. Fasten bottom screw through keeper and into mark on frame. Fasten top screw. Do not tighten screws completely.

4. Close screen and activate screen lock to check for correct alignment. Adjust keeper up or down, if necessary, for proper locking, then tighten screws.

Remove & Install Sliding Panel
Adjust Sliding Panel

FIGURE 1

FIGURE 2

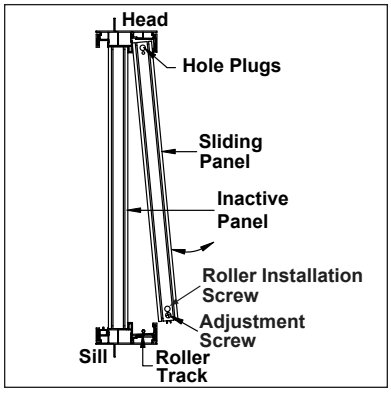

FIGURE 3

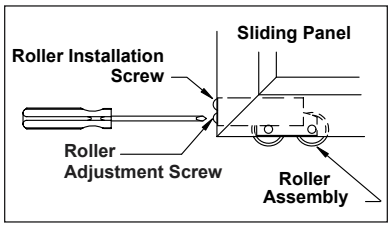

WARNING

Improper use of hand and power tools could result in personal injury and/or product damage. Follow equipment manufacturers' instructions for safe operation. Always wear safety glasses.

WARNING **Panels are heavy. Use caution when handling to avoid injury or damage. Use adequate number of people to safely handle panel.**

NOTE: The sliding panel is normally shipped completely installed.

Remove Sliding Panel

1. Slide panel open about 12".
2. Insert a stiff-bladed putty knife into sill channel and gently raise door to remove pressure from roller assembly **(FIGURE 1)**.
3. With a Phillips head screwdriver, turn roller adjustment screw **(FIGURE 3)** counterclockwise to completely retract rollers. Repeat for other bottom roller.

NOTE: Top screw hole seen in FIGURE 1 houses roller installation screw. **Do NOT** use the top screw for adjusting rollers.

4. Grasp both sides of panel and lift the panel up into the head frame channel **(FIGURE 2)**.
5. Pull bottom of panel toward you and remove panel from frame.

Install Sliding Panel

1. With panel laying down, insert a Phillips screwdriver into the roller adjustment hole at the bottom of the panel and turn the adjustment screw counterclockwise to completely retract the rollers **(FIGURE 1, 2 & 3)**. Repeat for other roller set.
2. With panel upright and rollers down, position panel near the center of the frame and lift it up into the head frame channel **(FIGURE 2)**.
3. Carefully push bottom of panel away from you until it clears the inside of the sill and is positioned properly in the frame channel. A stiff-bladed putty knife can be used to help slide panel into channel.

NOTE: The rollers must be correctly seated on the roller track so the panel operates smoothly. Groove of rollers must rest on crown of roller track.

Adjust Sliding Panel – Turn adjusting screw **(FIGURE 3)**:

Clockwise – Lower Rollers – Raise Panel
Counterclockwise – Raise Rollers – Lower Panel

NOTE: Before adjusting, use putty knife to lift panel slightly, taking weight off rollers **(FIGURE 1)**.

Use roller adjustment screw **(FIGURE 3)** to raise or lower panel to achieve smooth operation and to keep panel level and plumb.

Reversing Door Frame

FIGURE 1

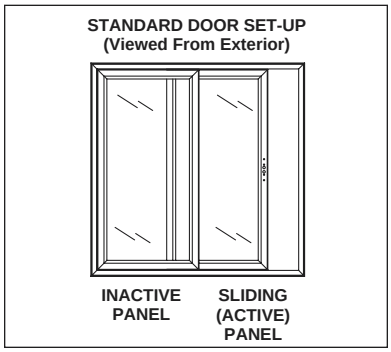

FIGURE 2

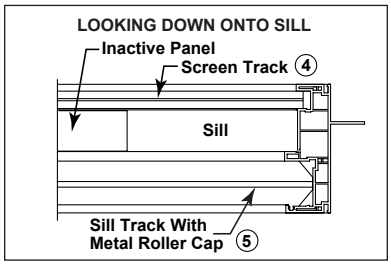

FIGURE 3

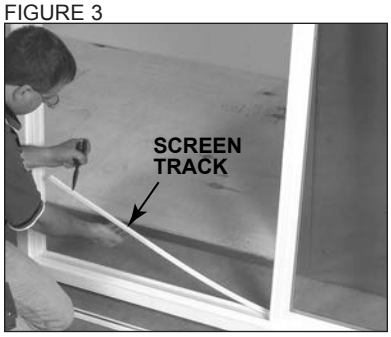

FIGURE 4

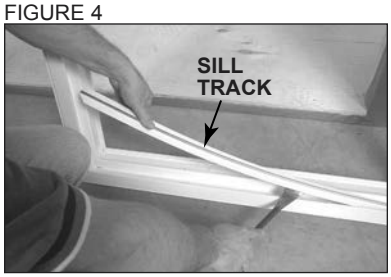

Reversing Door Frame must be completed before installing unit in rough opening! Only 6-8 doors are reversible.

WARNING

Improper use of hand and power tools could result in personal injury and/or product damage. Follow equipment manufacturers' instructions for safe operation. Always wear safety glasses.

WARNING **Panels are heavy. Use caution when handling to avoid injury or damage. Use adequate number of people to safely handle panel.**

Determine Door Operation

Patio door operation is viewed from the exterior of the unit **(FIGURE 1)**. Reversible patio doors are factory set-up so the inactive panel is on the left side and the active panel is on the right side. If you wish to have the left panel active instead, the door frame, inactive panel, sliding panel and hardware must be reversed **before** installing unit in rough opening. Instructions follow.

Reversing Door Frame

*Secure unit upright, positioned as in **(FIGURE 1)**, so it will be stable while performing the following steps.*

1. Remove packaging materials from door frame.
2. Remove the screen (see Page 10).
3. Remove the active panel (see Page 12).
4. Remove screen track from screen channel **(FIGURE 2, 3 & 5)**.
5. Remove sill stop and rotate sill track out of the track channel **(FIGURE 4 & 5)**.

FIGURE 5

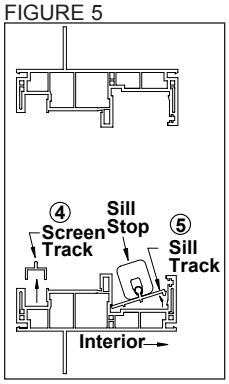

Reversing Door Frame (continued)

FIGURE 6

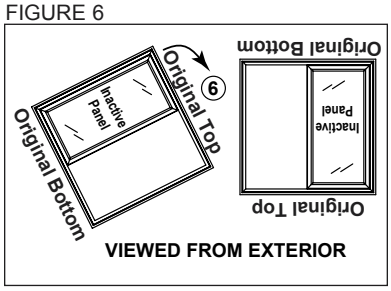

FIGURE 7

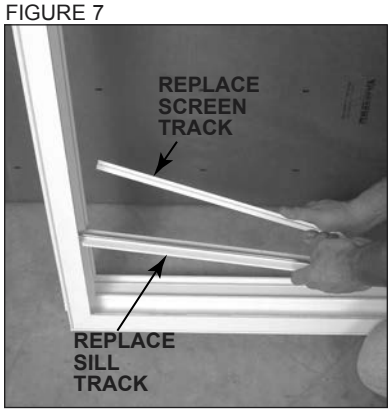

WARNING

Improper use of hand and power tools could result in personal injury and/or product damage. Follow equipment manufacturers' instructions for safe operation. Always wear safety glasses.

WARNING **Panels are heavy. Use caution when handling to avoid injury or damage. Use adequate number of people to safely handle panel.**

6. Carefully rotate frame **(FIGURE 6)** so inactive panel is in the opposite position. It will now be on the right side as viewed from the outside.

7. Snap sill track, sill stop and screen track into place on the left side of the frame by reversing steps 4 and 5 **(FIGURE 7)**.

Reversing Sliding Panel

FIGURE 1

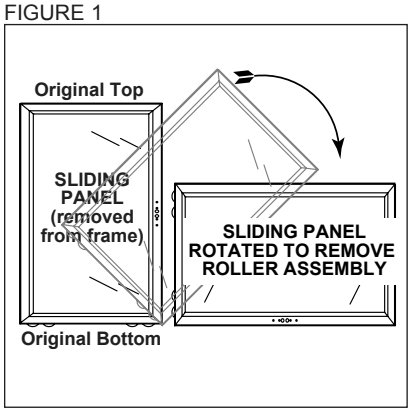

FIGURE 2

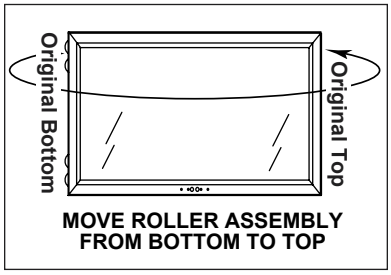

WARNING

Improper use of hand and power tools could result in personal injury and/or product damage. Follow equipment manufacturers' instructions for safe operation. Always wear safety glasses.

WARNING **Panels are heavy. Use caution when handling to avoid injury or damage. Use adequate number of people to safely handle panel.**

The reversing process starts on Page 13. If you have not completed all the steps on Page 13 and 14 go back and perform those procedures before proceeding.

Move rollers from bottom to top of panel.

1. If active panel is not removed from frame **(FIGURE 1)**, remove it according to procedures on Page 12.

2. Lay panel on its long side so interlock is up **(FIGURE 1 & 2)**. Secure panel in this position so it will not move or fall while roller assemblies are moved.

3. Use a putty knife to carefully pry up interlock **(FIGURE 3)**.

4. Turn installation screw **(FIGURE 4)** counter-clockwise until roller assembly is disconnected from screw. Remove screw from frame and keep for later use.

FIGURE 3

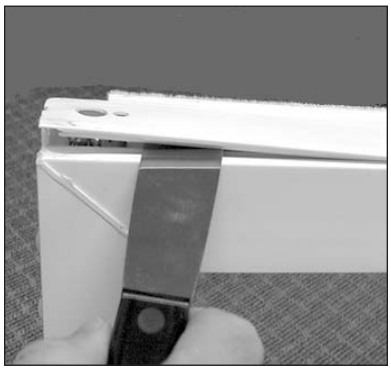

FIGURE 4

Reversing Sliding Panel (continued)

FIGURE 5

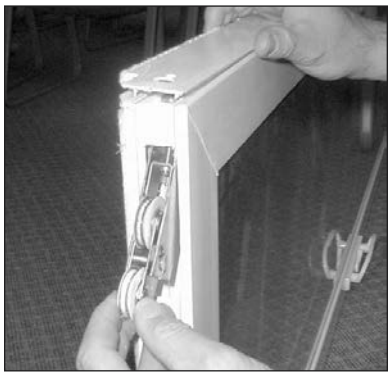

FIGURE 6

WARNING

Improper use of hand and power tools could result in personal injury and/or product damage. Follow equipment manufacturers' instructions for safe operation. Always wear safety glasses.

WARNING **Panels are heavy. Use caution when handling to avoid injury or damage. Use adequate number of people to safely handle panel.**

5. Pull the roller assembly out through the opening in the bottom of the frame **(FIGURE 5 & 6)**. You may need to turn the adjustment screw for easier removal.

NOTE: Adjustment screw **(FIGURE 6)** remains attatched to the roller assembly.

Install Roller Assembly In Top of Panel

NOTE: If present, remove covers on adjustment and mounting screw holes **(FIGURE 7)** by prying up on edges of mushroom caps.

6. Use a putty knife to carefully pry up other end of interlock **(FIGURE 8)**.

FIGURE 7

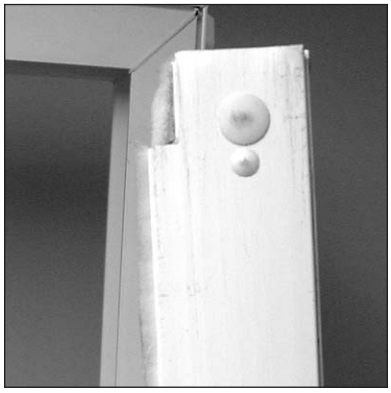

FIGURE 8

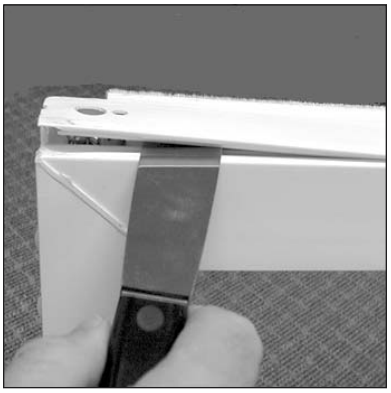

Reversing Sliding Panel (continued)

FIGURE 9

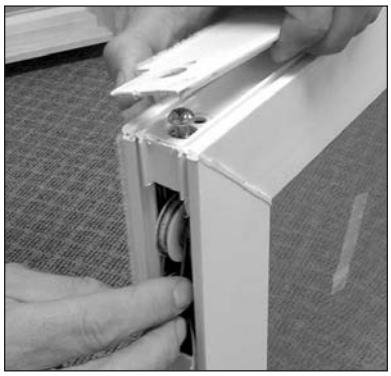

FIGURE 10

FIGURE 11

WARNING

Improper use of hand and power tools could result in personal injury and/or product damage. Follow equipment manufacturers' instructions for safe operation. Always wear safety glasses.

WARNING **Panels are heavy. Use caution when handling to avoid injury or damage. Use adequate number of people to safely handle panel.**

7. Take roller assembly to top of panel. Insert roller into frame pocket with adjustment screw up **(FIGURE 9)**.

NOTE: Adjustment screw must be worked through hole in frame so screw is accessible for panel alignment.

8. Hold the roller assembly in place **(FIGURE 10)**. Fasten securely with the installation screw you removed earlier **(FIGURE 11)**.

9. Place hole covers into screw holes in interlock where adjustment rollers were removed **(FIGURE 12)**.

10. Using a wooden block and rubber hammer, securely reseat interlock on door frame. Make certain interlock snaps in place along its entire length.

FIGURE 12

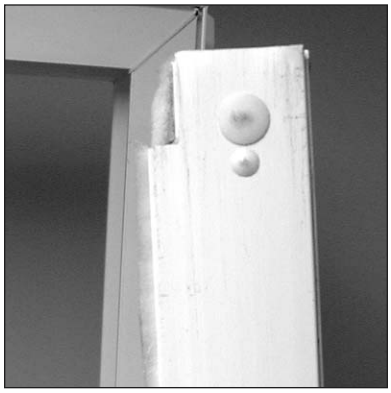

Reversing Sliding Panel (continued)

FIGURE 13

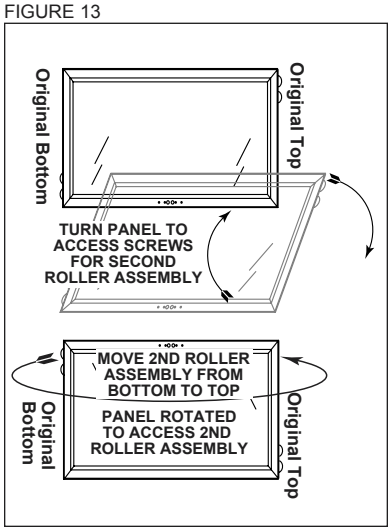

FIGURE 14

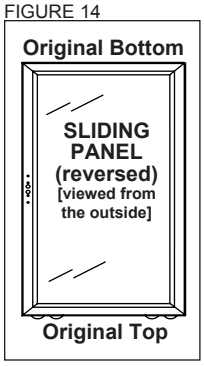

WARNING

Improper use of hand and power tools could result in personal injury and/or product damage. Follow equipment manufacturers' instructions for safe operation. Always wear safety glasses.

WARNING **Panels are heavy. Use caution when handling to avoid injury or damage. Use adequate number of people to safely handle panel.**

11. Turn panel **(FIGURE 13)** so installation screws on second roller assembly are accessible. Repeat steps 4 through 10 for this roller assembly.

Before next step check that:
- Installation screws are firmly secured
- Screw hole covers are applied
- Interlock is firmly attached along its entire length

12. Stand panel upright so rollers (that were moved to the top) now rest on the floor **(FIGURE 14)**.

13. Install sliding panel into frame following Panel Install procedures on Page 12.

NOTE: The sliding panel lock mechanism must be reversed so the latch hook is upward. See procedure starting on the next page.

Reversing Door Lock

FIGURE 1

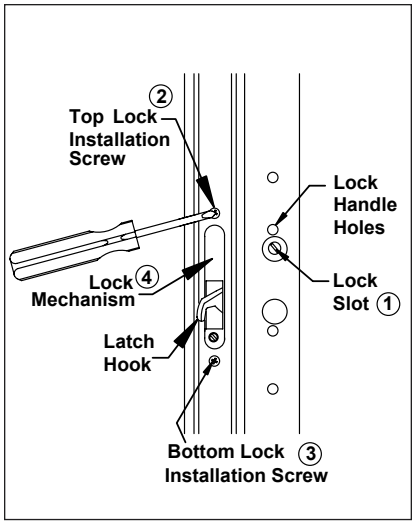

FIGURE 2

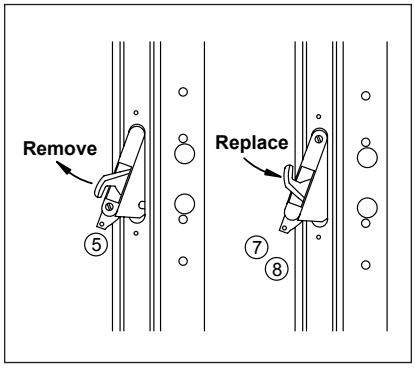

WARNING

Improper use of hand and power tools could result in personal injury and/or product damage. Follow equipment manufacturers' instructions for safe operation. Always wear safety glasses.

WARNING **Panels are heavy. Use caution when handling to avoid injury or damage. Use adequate number of people to safely handle panel.**

NOTE: The lock mechanism is factory-installed in the active panel. If you have reversed the panel, the lock must also be reversed.

1. Locate the lock slot, which is visible through one of the large handle holes. Use a slotted screwdriver to turn the lock slot until the latch hook is fully extended **(FIGURE 1)**.
2. Use a Phillips screwdriver to remove the top lock installation screw.
3. Grasp latch hook firmly with your fingers and remove second installation screw.
4. Continue holding latch hook securely and push lock mechanism slightly inward, then upward, until bottom of lock clears the lock opening.
5. Pull bottom end of lock out of opening and remove lock **(FIGURE 2)**.
6. Turn lock around so latch hook faces upward **(FIGURE 2)**.
7. Hold latch hook and insert top of lock into opening **(FIGURE 2)**.
8. Slide lock into place, aligning the lock screw holes with holes in the vinyl sash.
9. Fasten with installation screws.
10. Install active panel in door frame following procedure on Page 12.

Install Lock Keeper

FIGURE 1

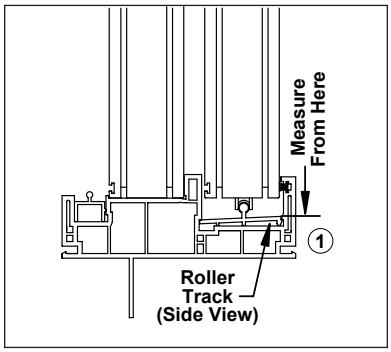

FIGURE 2

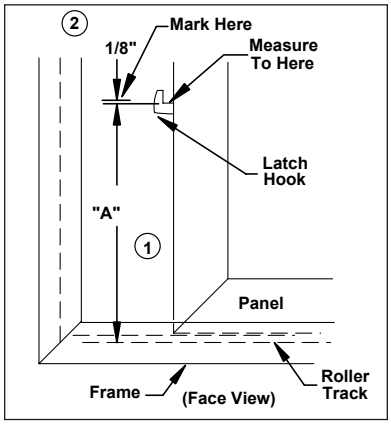

FIGURE 3

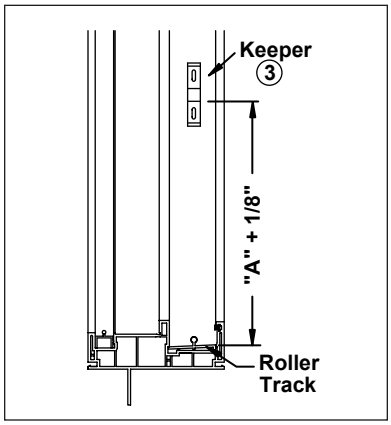

WARNING

Improper use of hand and power tools could result in personal injury and/or product damage. Follow equipment manufacturers' instructions for safe operation. Always wear safety glasses.

WARNING **Panels are heavy. Use caution when handling to avoid injury or damage. Use adequate number of people to safely handle panel.**

NOTE: To obtain proper measurements and accurately locate keeper, the active panel must be installed in door frame. Follow installation procedure on Page 12.

1. Measure distance from sill roller track to top flat part of latch hook **(FIGURE 1)**. Record this as "A" **(FIGURE 2)**.

2. Add 1/8" to "A" and mark this on the side frame **(FIGURE 2)**.

3. Position lock keeper so **bottom** of keeper hook is in line with the mark on the side frame. Center keeper in frame channel **(FIGURE 3)**.

4. Attach with provided screws. *Do not tighten screws completely*.

5. Close sliding door panel and activate lock to check for lock-to-keeper alignment. Move keeper up or down as necessary for proper locking. Tighten screws.

6. The lock latch hook may be adjusted for better locking. Turn latch hook adjustment screw clockwise to extend the latch hook and counterclockwise to retract it **(FIGURE 4)**.

FIGURE 4

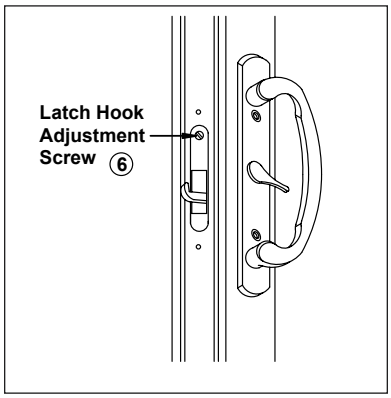

J-Channel (Optional) Installation

FIGURE 1

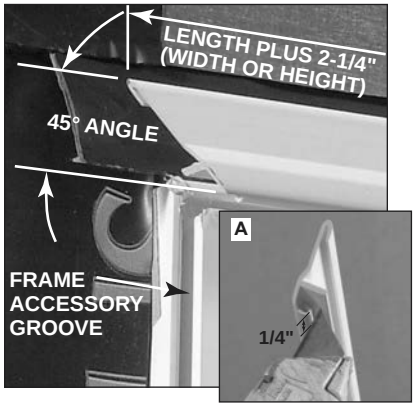

WARNING

Improper use of hand and power tools could result in personal injury and/or product damage. Follow equipment manufacturers' instructions for safe operation. Always wear safety glasses.

IMPORTANT: On each piece of J-Channel for doors, the ends are to be cut at a 45° angle.

1. To determine the length (width & height) of the J-Channel, measure from the inside of the accessory groove to the inside of the opposite accessory groove, add 2-1/4" to that length **(FIGURE 1)**.

Cut each end at 45° angle **(FIGURE 1)**.

2. Use a utility knife to cut back the snap-in-leg on each end by approximately 1/4" **(FIGURE 1A)**.

FIGURE 2

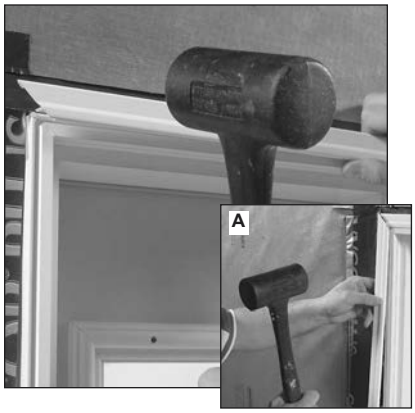

IMPORTANT: On stacked units, in order for the J-Channel to run the full length or width of the units, the snap-in-leg must be notched back where the units intersect.

3. Starting at one end of the head jamb, use a rubber mallet to apply the J-Channel. Use enough force so that the snap-in-leg on the J-Channel snaps into the frame accessory groove **(FIGURE 2)**.

4. Install side jamb J-Channel in the same manner as the head J-Channel **(FIGURE 2A)**.

Brick Mould (Optional) Installation

FIGURE 1

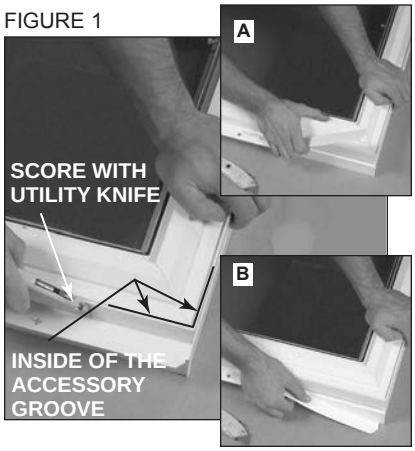

FIGURE 2

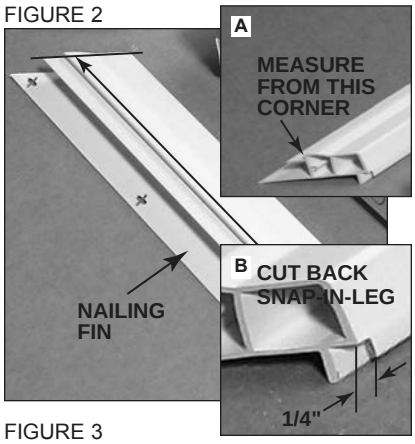

FIGURE 3

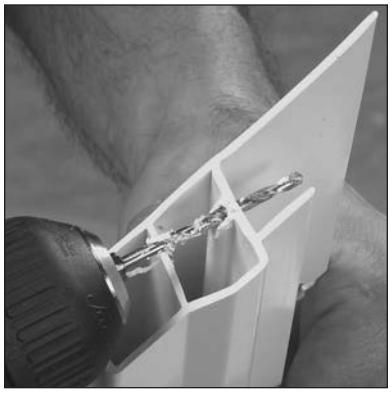

IMPORTANT: Brick mould must be applied onto the door unit BEFORE you install it into the rough opening. Place unit and brick mould on a clean flat surface before applying. Brick mould is not applied to door sill.

WARNING

Improper use of hand and power tools could result in personal injury and/or product damage. Follow equipment manufacturers' instructions for safe operation. Always wear safety glasses.

NOTE: ***For non-DPR installations only***.
Rough opening may need to be enlarged 3/8" to 1/2" to provide clearance for accessories and insulation.

DPR installations ***MUST*** maintain the 1/4" shim space on all sides (see Page 1).

1. Remove the nailing fin.
To remove the nailing fin from around the unit, place a utility knife as close to the frame as possible and score along the entire side and head nailing fins **(FIGURE 1)**. Bend up and down to remove the fin **(FIGURE 1A & 1B)**. *Sill fin is not removed.*

2. Cut to length & cut corners at 45°.
To determine the length (width & height) of the brick mould, measure from the inside of the accessory groove to the inside of the opposite accessory groove and add 2-5/8" to that length **(FIGURE 1)**.

Transfer that length to the brick mould piece by measuring from the corner nearest the nailing fin **(FIGURE 2 & 2A)** to the opposite corner. For horizontal piece, cut to measured length and cut each end in at 45° **(FIGURE 2)**. For vertical pieces, cut to measured length and cut only top ends at 45°. Bottom of vertical pieces remain straight to align with sill.

3. Cut snap-in-leg.
On each corner of the brick mould, cut back the snap-in-leg by approximately 1/4" **(FIGURE 2B)** so that the brick mould snaps smoothly into the accessory groove.

IMPORTANT: On stacked units, in order for the brick mould to run the full length or width of the units, the snap-in-leg must be notched back where the units intersect.

4. Pre-drill 1/8" hole.
On each end of the side brick mould pieces, drill a 1/8" hole through the screw boss at a 45° angle **(FIGURE 3)**.

Brick Mould (Optional) Installation (continued)

FIGURE 4

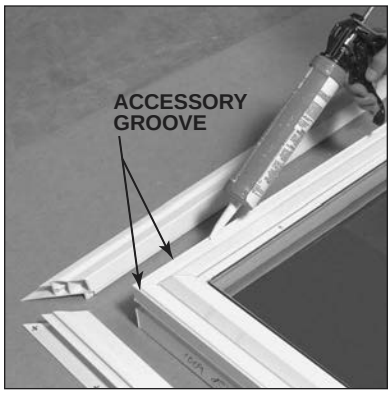

IMPORTANT: Make sure caulk fills the ENTIRE accessory groove. Water leakage may occur if not properly caulked.

5. Apply clear silicone caulk in accessory groove. Apply a continuous bead of clear silicone caulk in the accessory groove around the entire unit **(FIGURE 4)**.

FIGURE 5

6. Apply 1st horizontal pre-cut piece of brick mould. Starting at the corner of the door, apply the head brick mould. Align the inside corner of the brick mould with the corner of the door. Carefully align the snap-in-leg on the brick mould with the accessory groove on the door. Using a rubber mallet, start at the corner and going across entire piece of brick mould, tap the brick mould with enough force to snap it into place **(FIGURE 5)**.

FIGURE 6

IMPORTANT: Make sure caulk fills each corner. Water leakage may occur if not properly caulked.

7. Apply caulking to corners of brick mould.
After head brick mould is attached, apply a bead of silicone caulk at each end of the piece **(FIGURE 6)**.

8. Apply side brick mould pieces.
Apply each side brick mould piece in the same manner as the head brick mould **(FIGURE 5)**. Wipe off excess caulk with a shop towel dampened with denatured alcohol.

Brick Mould (Optional) Installation (continued)

FIGURE 7

WARNING

Improper use of hand and power tools could result in personal injury and/or product damage. Follow equipment manufacturers' instructions for safe operation. Always wear safety glasses.

7. Fasten corners together.
Fasten each corner of the brick mould with a stainless steel #7x1-1/4" Phillips flathead screw **(FIGURE 7)**.

Jamb Extension (Optional) Installation

FIGURE 1

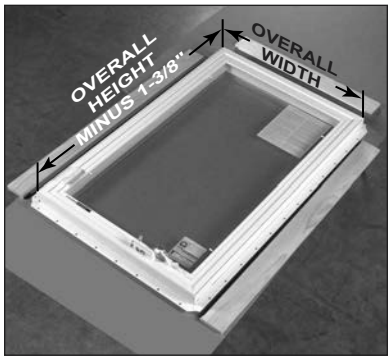

FIGURE 2

FIGURE 3

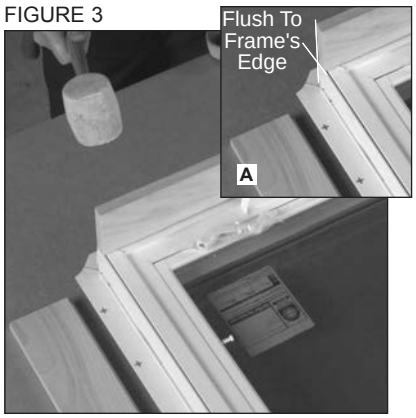

IMPORTANT: Jamb extension must be applied to the door unit BEFORE the unit is installed or the rough opening is prepared. Place unit (interior facing up) and jamb extension on a clean flat surface before applying.

NOTE: A Casement window is shown, however the "Jamb Extension" application procedure is the same for all VinylCrest doors and windows.

NOTE: Jamb extension is not applied to the sill on door units.

NOTE: ***For non-DPR installations only***. Rough opening may need to be enlarged 3/8" to 1/2" to provide clearance for accessories and insulation.

DPR installations ***MUST*** maintain the 1/4" shim space on all sides (see Page 1).

IMPORTANT: How To Measure When Lineal Jamb Extension is Ordered

To find the horizontal and vertical lengths when jamb extension is ordered in lineal pieces, measure the overall frame width for the horizontal pieces.

Cut back the vinyl snap-in-clip by 11/16" on each end of the horizontal jamb extension only **(FIGURE 2)**.

The length for the vertical pieces is the overall frame height minus 1-3/8" **(FIGURE 1)**.

To Apply Jamb Extension

1. Lay the pieces of jamb extension, so that the vinyl snap-in-clip faces the door **(FIGURE 2)**.

IMPORTANT: On mull or stacked units, in order for the jamb extension to run the full length or width of the units, the snap-in-leg must be notched back where the units intersect.

NOTE: Install the horizontal jamb extension so its ends are flush with the sides of the door frame **(FIGURE 3 & 3A)**.

2. Using a rubber mallet, fully secure horizontal jamb extension snap-in-clip into the full length of the door's accessory groove **(FIGURE 3)**.

3. Set the vertical jamb extension pieces between the horizontal piece. Apply both vertical pieces of wood jamb extension using a rubber mallet to exert enough force to snap the snap-in-clip into the accessory groove **(FIGURE 3)**.

Jamb Extension (Optional) Installation (continued)

FIGURE 4

WARNING

Improper use of hand and power tools could result in personal injury and/or product damage. Follow equipment manufactures' instructions for safe operation. Always wear safety glasses.

4. Align the side of the vertical piece with the end of the horizontal piece or use a small square to square the vertical extension. While holding items aligned with each other, drill 2 holes in the back of the horizontal piece. Fasten the horizontal piece to the vertical piece with 1-1/2" long sheet rock screws **(FIGURE 4)**.

Repeat for each corner where vertical and horizontal jamb extensions meet.

.

Field Stacking – Adding Transom

FIGURE 1

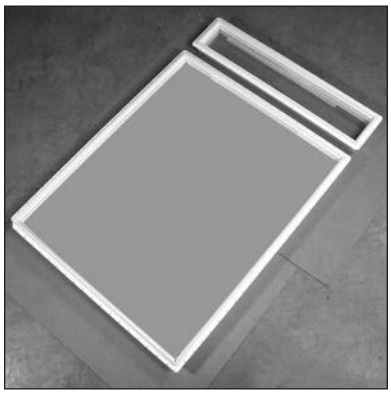

FIGURE 2

FIGURE 3

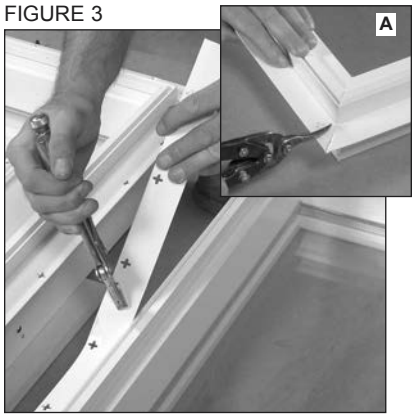

WARNING

Stacking, mulling, or combinations of stacking and mulling installation restrictions along with additional reinforcements may apply for your area. SNE Enterprises, Inc. recommends that the installer consult a registered Architect or local Structural Engineer for guidance to insure the installation meets all specific codes, conditions or applications regarding to stacking, mulling, or stacking and mulling combinations.

The process for mulling or stacking differs from mulling and stacking, please follow the proper steps.

Please observe the following definition for terms used in the subsequent instructions:

- **Stacked:** Joining two or more units together vertically **(FIGURE 1)**.

1. Place units to be stacked on a clean flat surface (interior facing down) in the position that they will be assembled **(FIGURE 1)**.

IMPORTANT: When placing units to be mulled or stacked, make sure the sills or water weeps on the units will be facing towards the sill (bottom) of the rough opening when they are installed (FIGURE 1).

WARNING

Improper use of hand or power tools could result in personal injury and/or product damage. Follow equipment manufacturers' instructions for safe operation. Always wear safety glasses.

2. Nailing fins must be removed from jambs that will be attached together. Remove the bottom transom fin and top door fin **(FIGURE 2)**.

3. Use a utility knife to score each fin, tight to the frame, the entire length of the fin **(FIGURE 2)**.

4.Use a hacksaw or tin snips to make an initial cut into a fin **(FIGURE 3A)**. Now bend the fin, adjacent to this cut, up and down with locking pliers until it breaks off **(FIGURE 3)**. Use this method to remove the door's top nailing fin and transom's bottom fin.

Field Stacking – Adding Transom (continued)

FIGURE 4

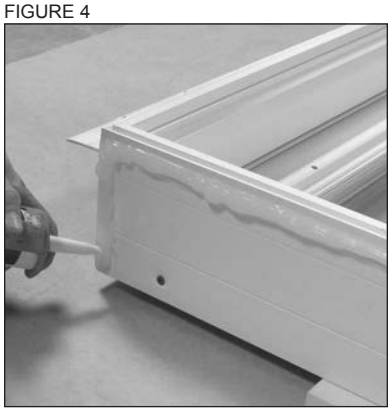

FIGURE 5

FIGURE 6

FIGURE 7

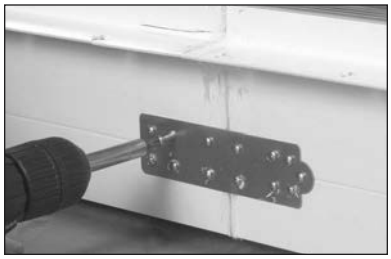

WARNING

Stacking, mulling, or combinations of stacking and mulling installation restrictions along with additional reinforcements may apply for your area. SNE Enterprises, Inc. recommends that the installer consult a registered Architect or local Structural Engineer for guidance to insure the installation meets all specific codes, conditions or applications regarding stacking, mulling, or stacking and mulling combinations.

IMPORTANT: Improper placement of sealant may result in transom leakage.

IMPORTANT

For All Mull/Stack Installs – Caulk Units –

1. Apply a continuous bead of caulk on the top of the door's head frame and on the bottom of the transom's sill where the nailing fins have been removed **(FIGURE 4)**.

2. Place the units in the position that they will be assembled and clamp tightly together.

NOTE: Clamps are an assembly aid and should be removed before installing the stacked unit into the structure.

3. Use a level to align door and transom. Ensure units line up vertically and horizontally on both sides **(FIGURE 5)**.

4. Use a metal bracket (FIGURE 6), an interior installation clip is shown, to secure the transom to the door. Apply bracket to door and transom with #8 x 1/2" long Phillips head sheet metal screws.

NOTE: Maintain alignment of door and transom as brackets are attached.

5. Work back and forth between door and transom side of bracket until screws are placed in all the holes **(FIGURE 7)**.

6. Wipe off any excess caulk with a shop towel dampened with denatured alcohol.

Mull Strip Configuration & Installation

FIGURE 1

FIGURE 2

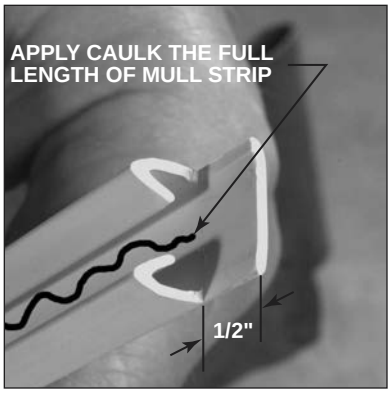

FIGURE 3

WARNING

Improper use of hand and power tools could result in personal injury and/or product damage. Follow equipment manufacturers' instructions for safe operation. Always wear safety glasses.

Sne Enterprises, Inc. offers a universal mull strip for both vertical and horizontal applications.

Measuring and Cutting Mull Strips

1. To determine the length of the mull strip, measure the unit assembly width, jamb to jamb **(FIGURE 1)** and then subtract 1/4". Cut the mull strip to length with a hacksaw.

2. Using a utility knife or tin snips cut back the snap-in-leg end on each mull strip by 1/2" **(FIGURE 2)**.

Mull Strip Installation

1. Apply a minimum 1/4" continuous bead of caulk the full length of the mull strip before installing strip **(FIGURE 2)**.

2. Apply continuous bead of caulk along entire length of accessory groove of both transom and door **(FIGURE 3)**.

Mull Strip Configuration & Installation (continued)

FIGURE 4

FIGURE 5

3. Start the mull strip into one end of the accessory groove **(FIGURE 4)**. With a rubber mallet lightly tap so the strip snaps into the accessory groove on both units. Check to ensure that the mull strip has fully snapped into place along the unit's entire length. If necessary, use a wood block and rubber mallet to tap mull strip tightly into place **(FIGURE 5)**.

After installing the mull cover, remove any excess caulk with shop towels dampened with denatured alcohol.

Turn Units Over

WARNING

Mulled, stacked or mulled and stacked units may require more than one person to lift and turn over without causing personal injury or causing damage to the windows.
Use appropriate number of people and safe lifting techniques.

1. Turn units over so the interior side is facing up on a flat, clean surface.

2. Apply the interior mull strips using the same procedures as the exterior mull strip application.

3. Allow caulk to dry before handling or installing unit.

NOTE: If clamps were used during door/transom assembly, remove clamps before installing unit in rough opening.

Recommended Finishing Instructions

WARNING

Always follow chemical manufacturers' safety instructions when using chemicals to avoid injury or illness

For Vinyl Surfaces

The vinyl surface may be cleaned with mild soap and water. Hard to remove stains and mineral deposits may be removed with mineral spirits.

- **Do NOT** use abrasive materials against vinyl surfaces.
- **Do NOT** scrape or use tools that might damage the surface.
- **Do NOT** paint vinyl surfaces.

SNE Enterprises, Inc. Products With Synthetic Stucco

Serious concerns have been raised about excessive moisture problems in homes and other buildings that have Exterior Insulation Finish Systems, commonly referred to as EIFS or Synthetic Stucco.

Many experts agree that a certain amount of water or moisture can be expected to enter almost any building exterior system. The building system should allow such water and moisture to escape or "weep" to the exterior, so no damage occurs. However, some EIFS systems may not allow water or moisture that penetrates the wall system to "weep" to the exterior. This can cause excessive moisture to accumulate within the wall system, which can cause serious damage to wall and other building components. It has been reported that so-called "barrier" EIFS systems are particularly prone to this problem.

Moisture problems in any type of building structure can be reduced by proper design and construction with appropriate moisture control considerations, taking into account prevailing climate conditions. Examples of moisture control considerations include flashing and/or sealing of all building exterior penetration points, use of appropriate materials and construction techniques, adherence to applicable building codes, and general attention to proper design and workmanship of the entire building system, including allowances for management of moisture within the wall system.

Determination of proper building design, components and construction, including moisture management, are the responsibility of the design architect, the contractors, and the manufacturer of the exterior wall finish products. Questions and concerns about moisture management issues should be taken up with these professionals. SNE Enterprises, Inc. is not responsible for problems or damages caused by deficiencies in building design, construction or maintenance, failure to install our products properly, or use of our products in systems that do not allow for proper management of moisture within the wall system.

Crestline
Windows & Doors

NOTES:

NOTES:

Crestline®
Windows & Doors

Part No. Install 105D 10/03 Printed in U.S.A.
©2003 SNE Enterprises, Inc.

NOTES:

1) OPERATION TYPE MAY BE PUSH-UP, HAND CHAIN OR ELECTRIC.
2) CLEARANCES SHOWN ARE MAXIMUMS. LESSER CLEARANCES MAY BE POSSIBLE.
3) UNLESS OTHERWISE NOTED, DOORS SHALL BE PROVIDED WITH SLIDE LOCKS AT EACH END OF BOTTOM BAR, ENGAGING GUIDES IN THE LOCKED POSITION.
4) ALL OPENING PREPARATION, ELECTRICAL POWER AND FIELD PAINTING SHALL BE PROVIDED BY OTHERS.
5) SERIES 2500I IS AN INSULATED SERIES 2500.
6) CURTAIN FINISH SHALL BE SILICONE POLYESTER PRE-PAINT OVER GALVANIZED GRADE 80 STEEL.
7) GUIDES, BRACKETS, BOTTOM BAR ANGLE AND HEAD STOPS ARE ZINC COATED.
8) VISION PANELS AVAILABLE.

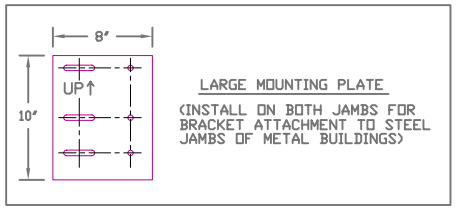

LARGE MOUNTING PLATE

(INSTALL ON BOTH JAMBS FOR BRACKET ATTACHMENT TO STEEL JAMBS OF METAL BUILDINGS)

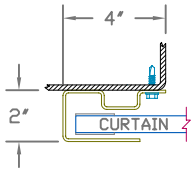

STEEL JAMBS
(USING 1/4-14 X 1" TEKS)

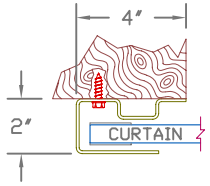

WOOD JAMBS
(USING 1/4-10 X 1" LAG)

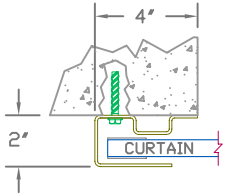

CONCRETE/MASONRY JAMBS
(USING 1/4" X 1-3/4" POWERS WEDGE-BOLT)

BRACKET ATTACHMENT
CONCRETE/MASONRY: POWERS WEDGE-BOLT, 3/8 X 1-3/4" LONG
WOOD: LAG SCREW, 3/8-7 X 3" LONG
STEEL: HEX BOLT, GR.5, 3/8-16 X 1-1/4" LONG

(*) FOR PUSH-UP OPERATION: 5-5/8"
FOR HAND CHAIN OPERATION: 6-3/8"
FOR ELECTRIC OPERATION: 7-1/8"
FOR OUTSIDE OF CHAIN DRIVE: 7-7/8"
NOTE: RIGHT SIDE DRIVE SHOWN

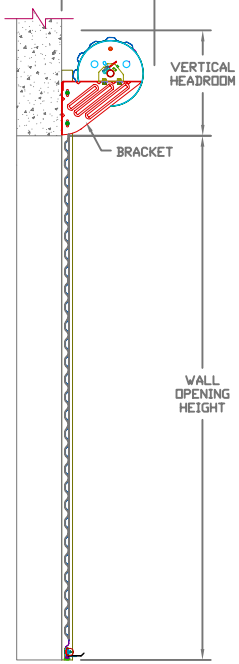

END VIEW

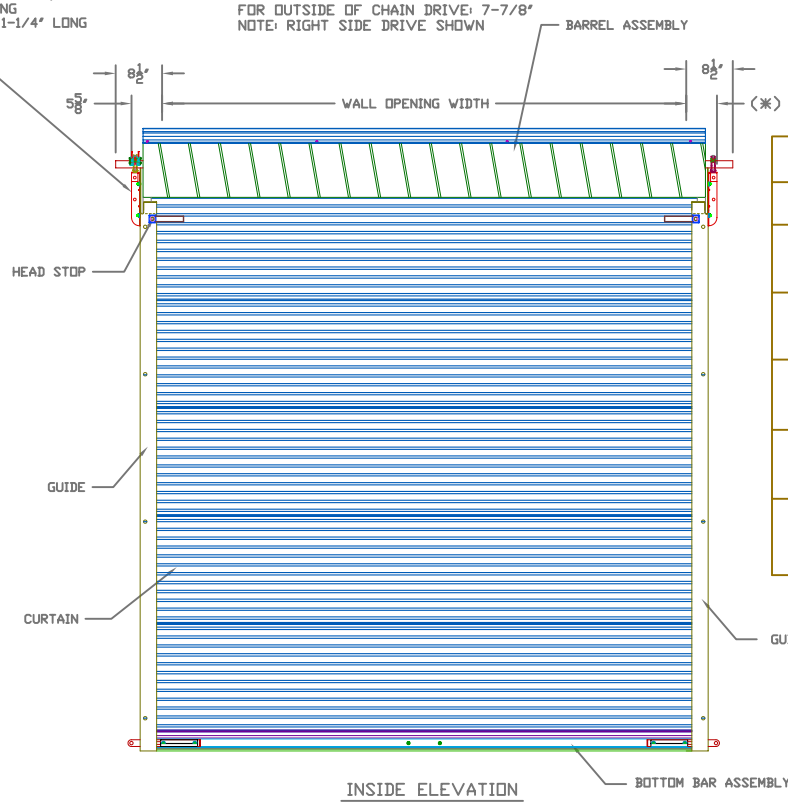

INSIDE ELEVATION

HEADROOM REQUIRED

OPENING HEIGHT	VERTICAL HEADROOM	HORIZONTAL HEADROOM
THRU 8'-0"	17"	19"
OVER 8'-0" THRU 10'-0"	19"	21"
OVER 10'-0" THRU 14'-0"	20"	22"
OVER 14'-0" THRU 16'-0"	21"	23"
OVER 16'-0" THRU 18'-0"	22"	24"
OVER 18'-0" THRU 20'-0"	23"	25"

12 GA GUIDE MOUNTING DETAIL

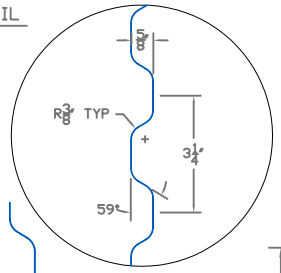

DETAIL A

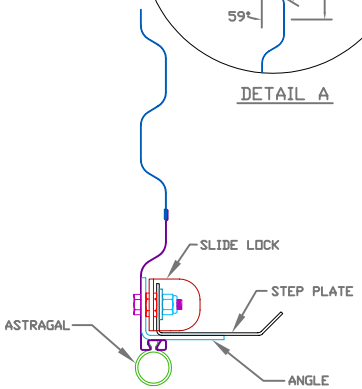

BOTTOM BAR ASSEMBLY

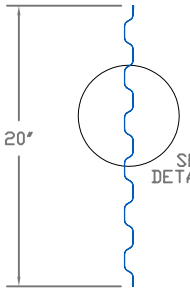

CURTAIN PANEL
26 GA CURTAIN DETAIL

REVISED: 3-16-06

FACTORY ORDER NUMBER	DOOR SERIES		QTY	OPENING SIZE		JAMB TYPE			OUTSIDE CURTAIN COLOR	OPERATION			OPERATION HAND	WEATHERSTRIP			ADDED OPTIONS
	2500	2500I		WIDTH	HEIGHT	STEEL	CONC./ MAS.	WOOD		PUSH UP	REDUCED CHAIN	ELECTRIC		TOP	HEADER	SIDE	

COMMERCIAL DOOR SERIES: 2500/2500I

CUSTOMER NUMBER:	DATE:
CUSTOMER NAME:	CONTACT:
PROJECT NAME:	
PROJECT LOCATION:	
PLANT:	SALESPERSON:
DRAWN BY:	DATE:
DRAWING NUMBER:	SHT: OF:

JANUS INTERNATIONAL CORPORATION
134 EAST LUKE ROAD
TEMPLE, GA 30179-4435
770-562-2850 FAX: 770-562-2264

REV	DATE	DESCRIPTION

MODEL C2ALC

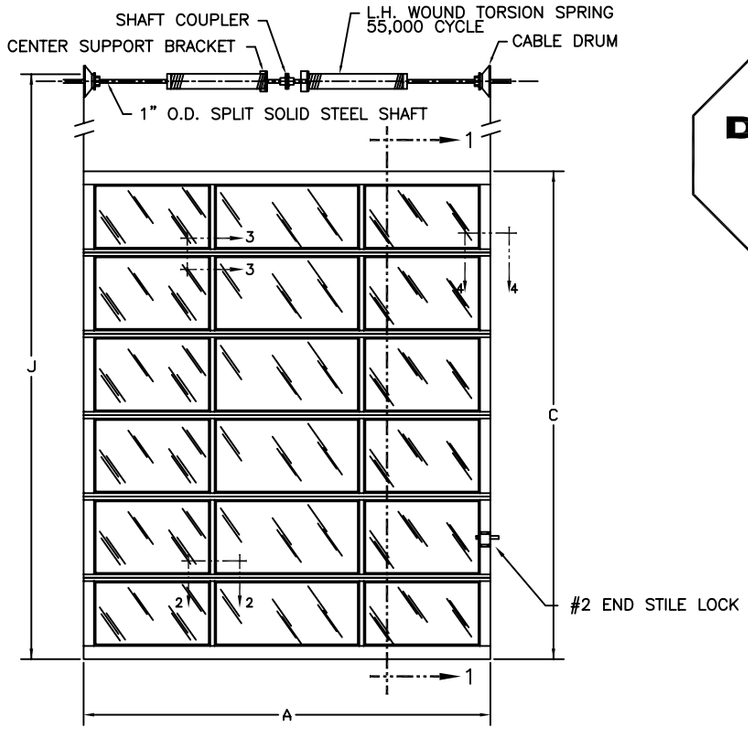

DOOR #3

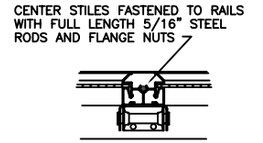

SECTION 2 – 2

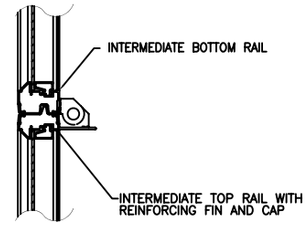

SECTION 3 – 3

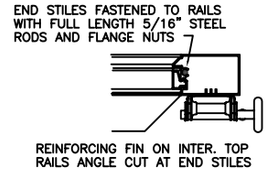

SECTION 4 – 4

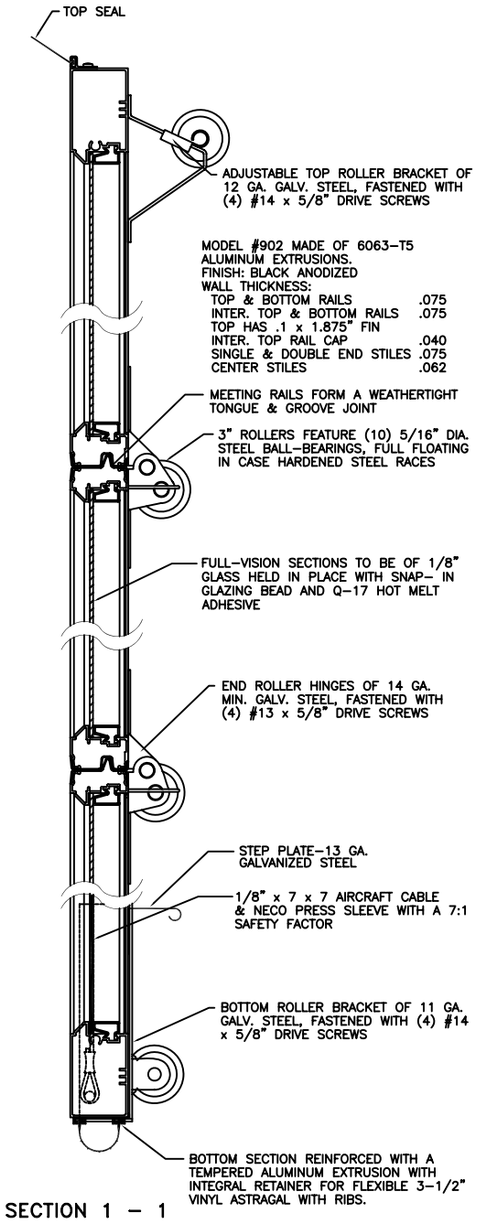

SECTION 1 – 1

IMPORTANT:
PLEASE REFERENCE THE SHOP DRAWING NUMBER ON ALL CORRESPONDENCE. THANK YOU!

(1) DOOR 12'-2" X 10'-3"

ACTUAL DOOR HEIGHT IS APPROX. 1" OVER BECAUSE OF JOINTS BETWEEN SECTIONS PLUS BOTTOM ASTRAGAL

1) DOOR TO BE MODEL #C2AL, FINISH AS FOLLOWS: BLACK ANODIZED
2) DOOR TO BE REVERSE ANGLE MOUNTED FULL-VERTICAL LIFT (B.A.)3" GALV. STEEL TRACK.
3) DOOR TO USE 55,000 CYCLE TORSION SPRINGS WITH 1" O.D. SPLIT SOLID STEEL SHAFT. SPRINGS TO COUNTER BALANCE DOOR WEIGHT OF (362 LBS.) AND DOOR TO CLEAR (LIFT ABOVE) THE OPENING BY 17". SPRINGS TO BE AS FOLLOWS:
   (1) .375 – 6.00 – 51.5" L.H.
   (1) .375 – 6.00 – 51.5" R.H.
4) DOOR TO HAVE AN INTERIOR MOUNTED #2 END STILE SLIDE BOLT DOOR LOCK.
5) DOOR TO HAVE (5) FULL-VISION SECTIONS OF 1/8" DSB GLASS LOCATED IN SECTIONS 2,3,4,5,&6. BOTTOM SECTION TO BE 1/8" TEMPERED GLASS.
6) DOOR TO HAVE (2) D1100-216 DRUMS WITH A PAIR OF 1/8" 7 X 7 X 31'-09".
7) DOOR TO HAVE A VINYL TOP SEAL AND A REVERSE ANGLE JAMB WEATHER SEAL.
8) CBPC DOOR ITEM NUMBER: C2ALC-CD*

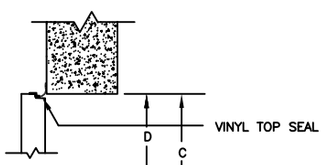

SECTION 5 – 5
HEADER DETAIL

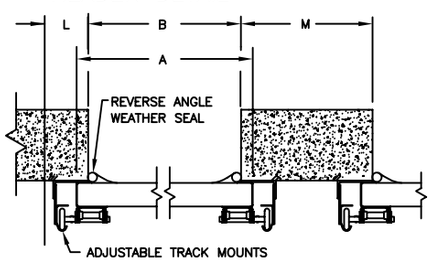

SECTION 6 – 6
JAMB DETAILS

MASONRY JAMBS. FOUR 3/8" MASONRY ANCHORS CAN BE USED FOR ATTACHMENT OF ANCHOR PLATES TO CONCRETE OR BLOCK WALLS.

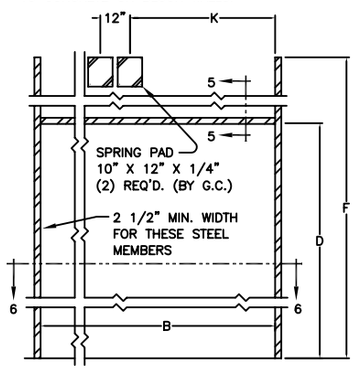

REAR ELEVATION
OPENING PREPARATION

SIDE ELEVATION
FULL-VERTICAL LIFT TRACK

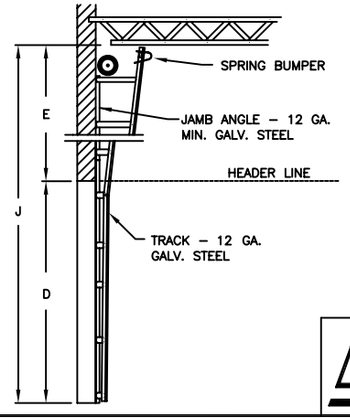

DIM.	DESCRIPTION	DIMENSIONS
A	DOOR WIDTH	12'-2"
B	OPENING WIDTH	12'-2"
	# OF PANELS WIDE	3
C	DOOR HEIGHT	10'-3"
D	OPENING HEIGHT	10'-3"
	# OF SECTIONS HIGH	6
E	HEADROOM (MIN.)	11'-11"
F	JAMB HEIGHT (MIN.)	21'-6"
G		
H		
J	FLOOR TO CEILING (MIN.)	21'-6"
K	SPRING PAD OFFSET	5'-6"
L	SIDEROOM 1 (MIN.)	5 1/2"
M	SIDEROOM 2 (MIN.)	11"
N	OPERATOR BACKROOM (MIN.)	N/A

ALL SHOP DRAWINGS MUST BE SIGNED AND RETURNED PRIOR TO ANY FABRICATION.

ARCHITECT:
CONTRACTOR:
CUSTOMER:

IDEAL Door®

SHOP DRAWING

Clopay Corporation All Rights Reserved
The arrangements depicted herein are the sole property of the Clopay Corporation and may not be reproduced in any form without its written permission.

SCALE: NOT TO SCALE
DATE: 5/24/2011
DRAWN BY: JLG
CHECKED BY: MB
CODE NUMBER: MAX CYCLE
CONTRACTOR:
ARCHITECT:
CUSTOMER: MENARDS
JOB: DOOR 3
DRAWING NUMBER: 22907-1R0
1/10

REV	DATE	DESCRIPTION

MODEL C2ALC

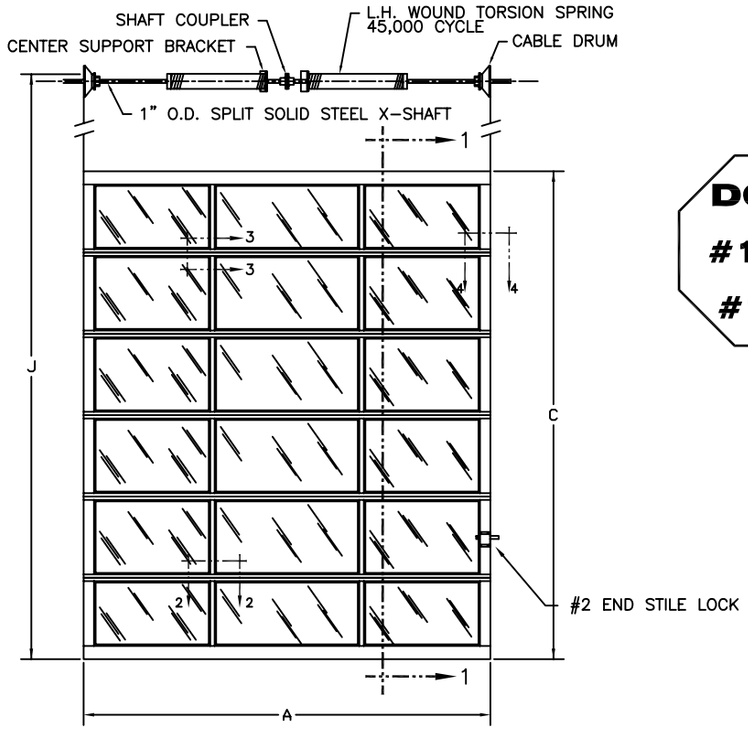

DOOR #10 & #10A

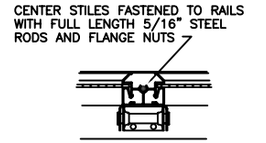

SECTION 2 – 2

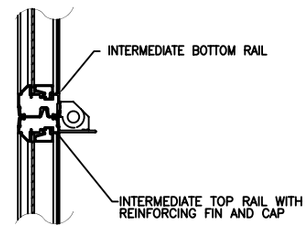

SECTION 3 – 3

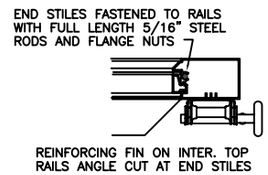

SECTION 4 – 4

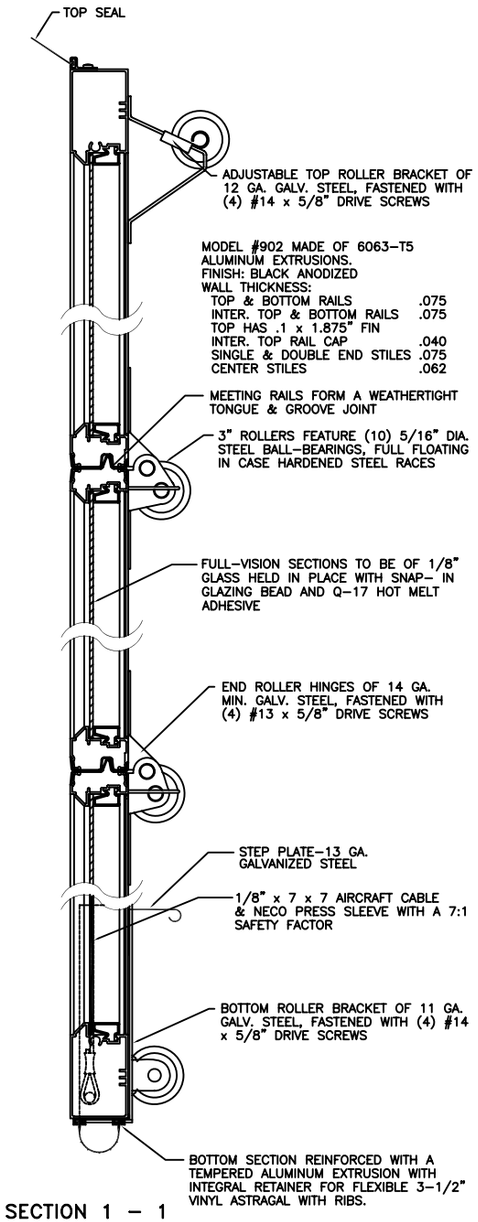

SECTION 1 – 1

IMPORTANT:
PLEASE REFERENCE THE SHOP DRAWING NUMBER ON ALL CORRESPONDENCE. THANK YOU!

(1) DOOR 10'-2" X 10'-3"

ACTUAL DOOR HEIGHT IS APPROX. 1" OVER BECAUSE OF JOINTS BETWEEN SECTIONS PLUS BOTTOM ASTRAGAL

1) DOOR TO BE MODEL #C2AL, FINISH AS FOLLOWS: BLACK ANODIZED
2) DOOR TO BE REVERSE ANGLE MOUNTED FULL-VERTICAL LIFT (B.A.) 3" GALV. STEEL TRACK.
3) DOOR TO USE 45,000 CYCLE TORSION SPRINGS WITH 1" O.D. SPLIT EXTENDED SOLID STEEL SHAFT. SPRINGS TO COUNTER BALANCE DOOR WEIGHT OF (307 LBS.) AND DOOR TO CLEAR (LIFT ABOVE) OPENING BY 8". SPRINGS TO BE AS FOLLOWS:
   (1) .344 – 6.00 – 40" L.H.
   (1) .344 – 6.00 – 40" R.H.
4) DOOR TO HAVE AN INTERIOR MOUNTED #2 END STILE SLIDE BOLT DOOR LOCK.
5) DOOR TO HAVE (5) FULL-VISION SECTIONS OF 1/8" DSB GLASS LOCATED IN SECTIONS 2,3,4,5,&6. BOTTOM SECTION TO BE 1/8" TEMPERED GLASS.
6) DOOR TO HAVE (2) D850-132 DRUMS WITH A PAIR OF 1/8" 7 X 7 X 22'-07".
7) DOOR TO HAVE A VINYL TOP SEAL AND A REVERSE ANGLE JAMB WEATHER SEAL.
8) CBPC DOOR ITEM NUMBER: C2ALC-CD*

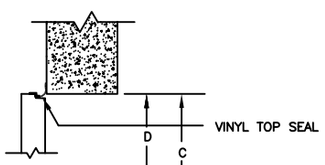

SECTION 5 – 5
HEADER DETAIL

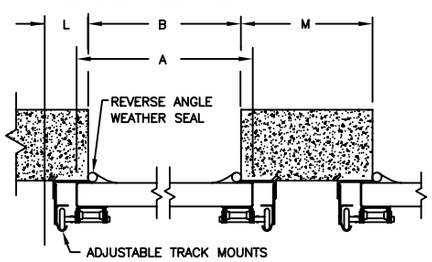

SECTION 6 – 6
JAMB DETAILS

MASONRY JAMBS. FOUR 3/8" MASONRY ANCHORS CAN BE USED FOR ATTACHMENT OF ANCHOR PLATES TO CONCRETE OR BLOCK WALLS.

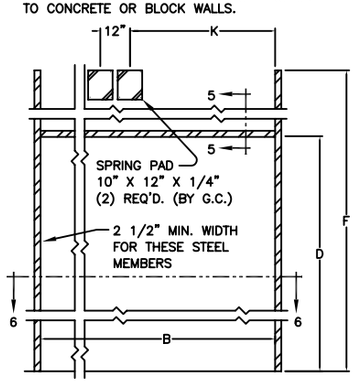

REAR ELEVATION
OPENING PREPARATION

SIDE ELEVATION
FULL-VERTICAL LIFT TRACK

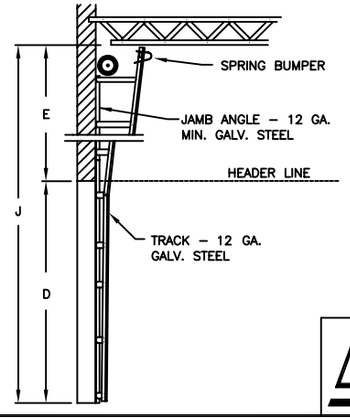

DIM.	DESCRIPTION	DIMENSIONS
A	DOOR WIDTH	10'-2"
B	OPENING WIDTH	10'-2"
	# OF PANELS WIDE	3
C	DOOR HEIGHT	10'-3"
D	OPENING HEIGHT	10'-3"
	# OF SECTIONS HIGH	6
E	HEADROOM (MIN.)	11'-11"
F	JAMB HEIGHT (MIN.)	21'-6"
G		
H		
J	FLOOR TO CEILING (MIN.)	21'-6"
K	SPRING PAD OFFSET	4'-6"
L	SIDEROOM 1 (MIN.)	5 1/2"
M	SIDEROOM 2 (MIN.)	11"
N	OPERATOR BACKROOM (MIN.)	N/A

ALL SHOP DRAWINGS MUST BE SIGNED AND RETURNED PRIOR TO ANY FABRICATION.

ARCHITECT:
CONTRACTOR:
CUSTOMER:

IDEAL Door®

SHOP DRAWING

Clopay Corporation All Rights Reserved
The arrangements depicted herein are the sole property of the Clopay Corporation and may not be reproduced in any form without its written permission.

SCALE: NOT TO SCALE
DATE: 5/24/2011
DRAWN BY: JLG
CHECKED BY: MB
CODE NUMBER: MAX CYCLE
CONTRACTOR:
ARCHITECT:
CUSTOMER: MENARDS
JOB: DOOR 10 & 10A
DRAWING NUMBER: 22907-2R0

REV	DATE	DESCRIPTION

MODEL C2ALC

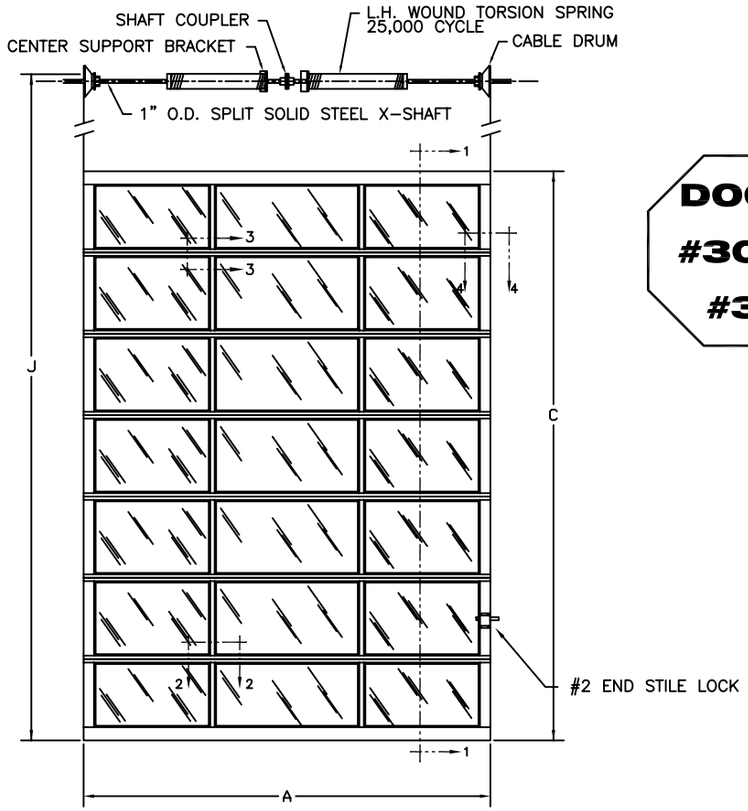

DOOR #30 & #31

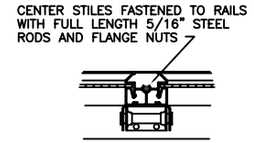

COR-LOVLY CENTER HINGE OF 16 GA. GALV. STEEL, ATTACHED TO INTER. BOTTOM RAIL WITH (2) #14 x 5/8" DRIVE SCREWS AND TO INTER. TOP RAIL WITH (2) 1/4-20 x 1/2" HEX HEAD MACHINE SCREWS & NUTS

SECTION 2 – 2

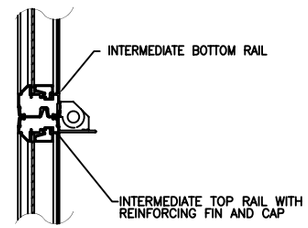

SECTION 3 – 3

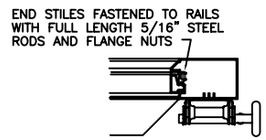

REINFORCING FIN ON INTER. TOP RAILS ANGLE CUT AT END STILES

SECTION 4 – 4

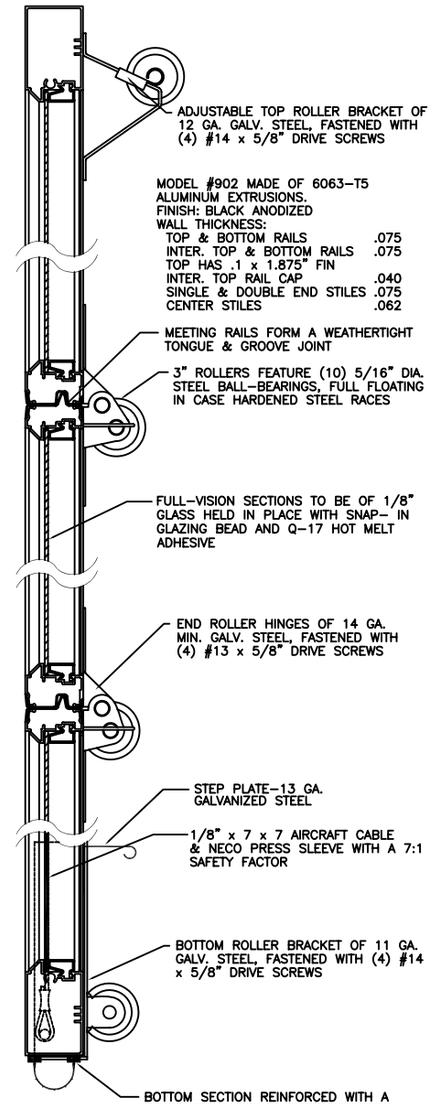

SECTION 1 – 1

IMPORTANT:
PLEASE REFERENCE THE SHOP DRAWING NUMBER ON ALL CORRESPONDENCE. THANK YOU!

(2) DOORS 12'-2" X 12'-3"

ACTUAL DOOR HEIGHT IS APPROX. 1" OVER BECAUSE OF JOINTS BETWEEN SECTIONS PLUS BOTTOM ASTRAGAL

1) DOOR TO BE MODEL #C2AL, FINISH AS FOLLOWS: BLACK ANODIZED
2) DOOR TO BE REVERSE ANGLE MOUNTED FULL-VERTICAL LIFT (B.A.) 3" GALV. STEEL TRACK.
3) DOOR TO USE 25,000 CYCLE TORSION SPRINGS WITH 1" O.D. SPLIT EXTENDED SOLID STEEL SHAFT. SPRINGS TO COUNTER BALANCE DOOR WEIGHT OF (428 LBS.). DOOR TO CLEAR (LIFT ABOVE) OPENING BY 8". SPRINGS TO BE AS FOLLOWS:
   (1) .375 – 6.00 – 44" L.H.
   (1) .375 – 6.00 – 44" R.H.
4) DOOR TO HAVE AN INTERIOR MOUNTED #2 END STILE SLIDE BOLT DOOR LOCK.
5) DOOR TO HAVE (6) FULL-VISION SECTIONS OF 1/8" DSB GLASS LOCATED IN SECTIONS 2,3,4,5,6,&7. BOTTOM SECTION TO BE 1/8" TEMPERED GLASS.
6) DOOR TO HAVE (2) D1100-216 DRUMS WITH A PAIR OF 1/8" 7 X 7 X 31'-8".
7) DOOR TO HAVE A VINYL TOP SEAL AND A REVERSE ANGLE JAMB WEATHER SEAL.
8) CBPC DOOR ITEM NUMBER: C2ALC-CD*

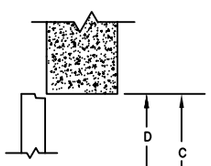

SECTION 5 – 5
HEADER DETAIL

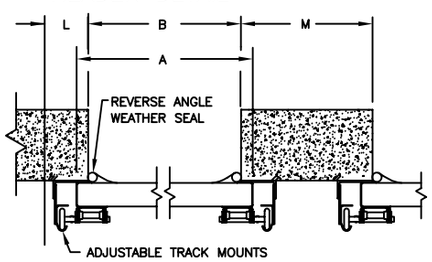

SECTION 6 – 6
JAMB DETAILS

MASONRY JAMBS. FOUR 3/8" MASONRY ANCHORS CAN BE USED FOR ATTACHMENT OF ANCHOR PLATES TO CONCRETE OR BLOCK WALLS.

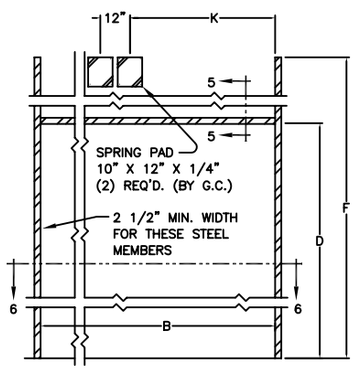

REAR ELEVATION
OPENING PREPARATION

SIDE ELEVATION
FULL-VERTICAL LIFT TRACK

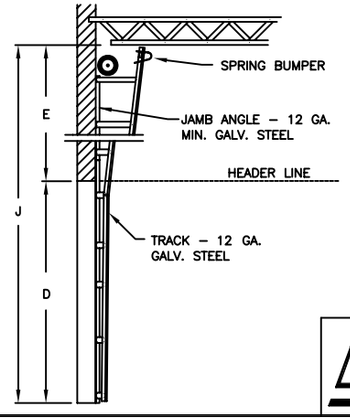

DIM.	DESCRIPTION	DIMENSIONS
A	DOOR WIDTH	12'-2"
B	OPENING WIDTH	12'-2"
	# OF PANELS WIDE	3
C	DOOR HEIGHT	12'-3"
D	OPENING HEIGHT	12'-3"
	# OF SECTIONS HIGH	7
E	HEADROOM (MIN.)	14'-0"
F	JAMB HEIGHT (MIN.)	25'-6"
G		
H		
J	FLOOR TO CEILING (MIN.)	25'-6"
K	SPRING PAD OFFSET	5'-6"
L	SIDEROOM 1 (MIN.)	5 1/2"
M	SIDEROOM 2 (MIN.)	11"
N	OPERATOR BACKROOM (MIN.)	N/A

ALL SHOP DRAWINGS MUST BE SIGNED AND RETURNED PRIOR TO ANY FABRICATION.

ARCHITECT:
CONTRACTOR:
CUSTOMER:

IDEAL Door

SHOP DRAWING

Clopay Corporation All Rights Reserved
The arrangements depicted herein are the sole property of the Clopay Corporation and may not be reproduced in any form without its written permission.

SCALE: NOT TO SCALE
DATE: 5/24/2011
DRAWN BY: JLG
CHECKED BY: MB
CODE NUMBER: MAX CYCLE
CONTRACTOR:
ARCHITECT:
CUSTOMER: MENARDS
JOB: DOOR 30 & 31
DRAWING NUMBER: 22907-3R0
3/10

REV	DATE	DESCRIPTION

MODEL C4SS

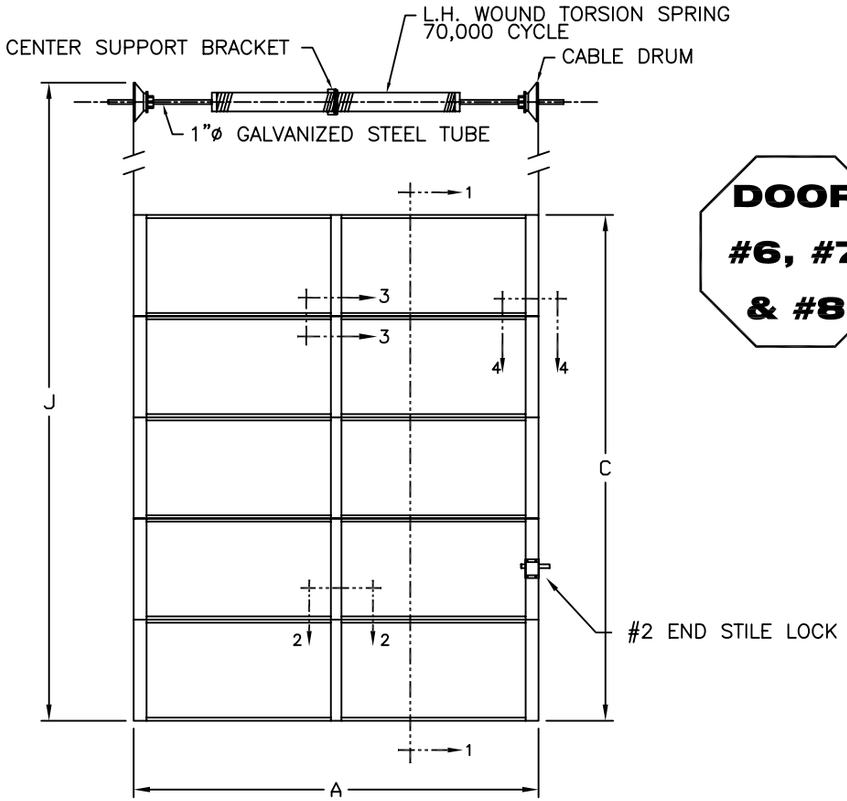

DOOR #6, #7 & #8

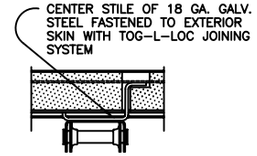

SECTION 2 – 2

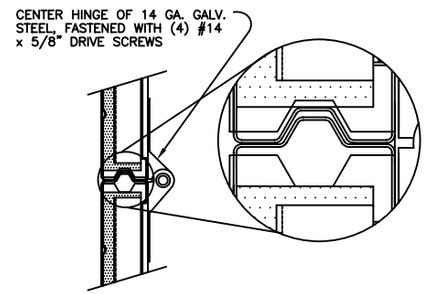

SECTION 3 – 3

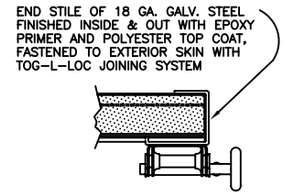

SECTION 4 – 4

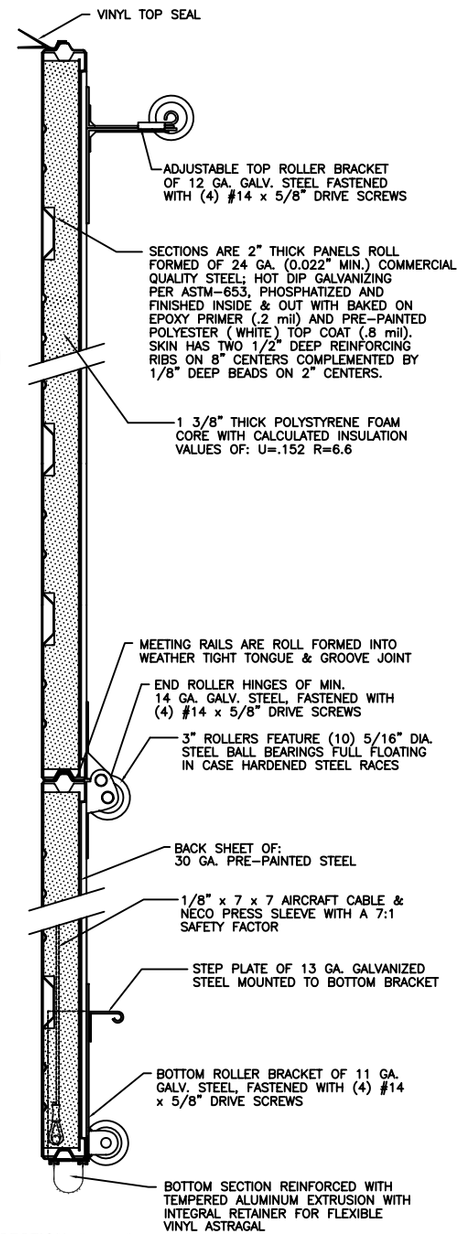

SECTION 1 – 1

IMPORTANT:
PLEASE REFERENCE THE SHOP DRAWING NUMBER ON ALL CORRESPONDENCE. THANK YOU!

(3) DOORS 9'-2" X 9'-6"

ACTUAL DOOR HEIGHT IS APPROX. 1" OVER BECAUSE OF JOINTS BETWEEN SECTIONS PLUS BOTTOM ASTRAGAL

1) DOOR TO BE MODEL C4SS, FINISH PAINTED WHITE, WITH 30 GA. PRE-PAINTED STEEL BACK SHEET.
2) DOOR TO BE REVERSE ANGLE MOUNTED FULL-VERTICAL LIFT (B.A.) 3" GALV. STEEL TRACK.
3) DOOR TO USE 70,000 CYCLE TORSION SPRINGS WITH 1" O.D. GALVANIZED STEEL TUBE. SPRINGS TO COUNTER BALANCE DOOR WEIGHT OF (206 LBS.). DOOR TO CLEAR OPENING BY 30" SPRINGS TO BE AS FOLLOWS:
   (1) 0.313 – 6.00 – 37" L.H.
   (1) 0.313 – 6.00 – 37" R.H.
4) DOOR TO HAVE AN INTERIOR MOUNTED #2 END STILE SLIDE BOLT DOOR LOCK.
5) DOOR TO HAVE (2) D1100-216 DRUMS WITH A PAIR OF 1/8" 7 X 7 X 31'-10".
6) DOOR TO HAVE A VINYL TOP SEAL AND A REVERSE ANGLE JAMB WEATHER SEAL.
7) CBPC DOOR ITEM NUMBER: C4SS-CD*

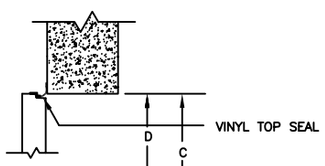

SECTION 5 – 5
HEADER DETAIL

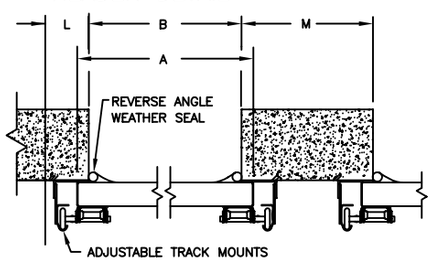

SECTION 6 – 6
JAMB DETAILS

MASONRY JAMBS. FOUR 3/8" MASONRY ANCHORS CAN BE USED FOR ATTACHMENT OF ANCHOR PLATES TO CONCRETE OR BLOCK WALLS.

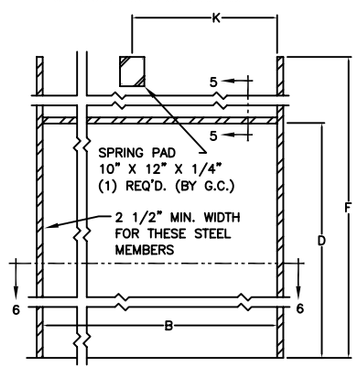

REAR ELEVATION
OPENING PREPARATION

SIDE ELEVATION
FULL-VERTICAL LIFT TRACK

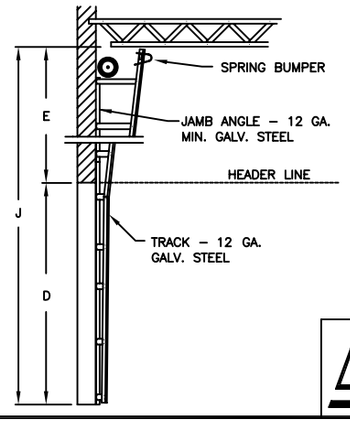

DIM.	DESCRIPTION	DIMENSIONS
A	DOOR WIDTH	9'-2"
B	OPENING WIDTH	9'-0"
	# OF PANELS WIDE	2
C	DOOR HEIGHT	9'-6"
D	OPENING HEIGHT	9'-6"
	# OF SECTIONS HIGH	5
E	HEADROOM (MIN.)	13'-1"
F	JAMB HEIGHT (MIN.)	20'-0"
G		
H		
J	FLOOR TO CEILING (MIN.)	22'-6"
K	SPRING PAD OFFSET	4'-6"
L	SIDEROOM 1 (MIN.)	5 1/2"
M	SIDEROOM 2 (MIN.)	11"
N	OPERATOR BACKROOM (MIN.)	N/A

ARCHITECT:
CONTRACTOR:
CUSTOMER:
ALL SHOP DRAWINGS MUST BE SIGNED AND RETURNED PRIOR TO ANY FABRICATION.

IDEAL Door®

SHOP DRAWING

Clopay Corporation All Rights Reserved
The arrangements depicted herein are the sole property of the Clopay Corporation and may not be reproduced in any form without its written permission.

SCALE: NOT TO SCALE
DATE: 5/24/2011
DRAWN BY: JLG
CHECKED BY: MB
CODE NUMBER: MAX CYCLE
CONTRACTOR:
ARCHITECT:
CUSTOMER: MENARDS
JOB: DOOR 6, 7 & 8
DRAWING NUMBER: 22907-4R0
4/10

REV	DATE	DESCRIPTION

MODEL C2ALC

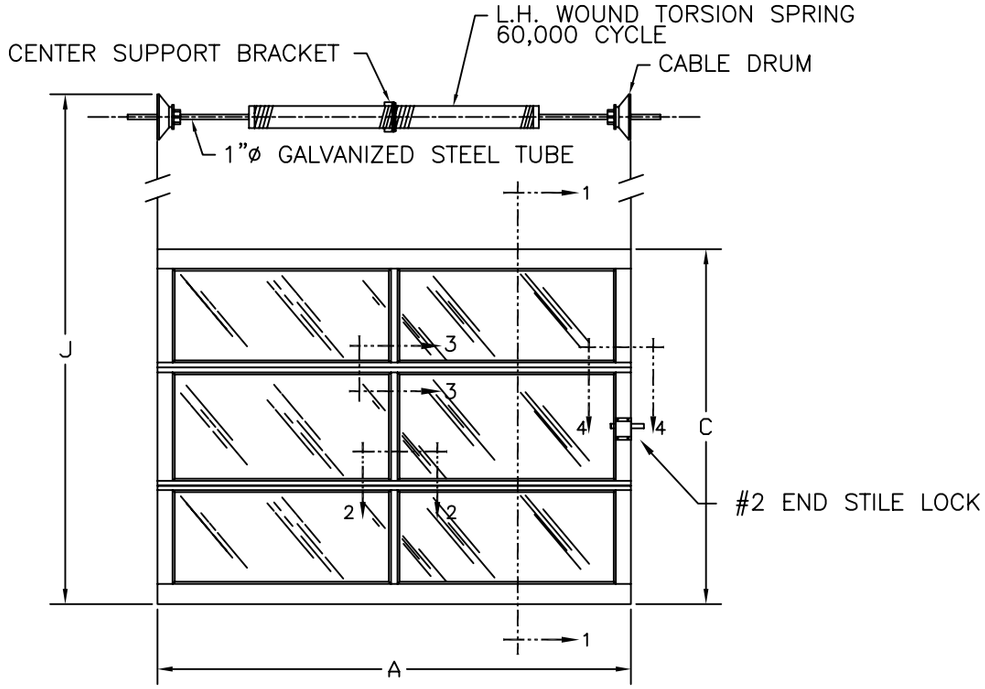

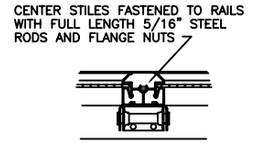

SECTION 2 – 2

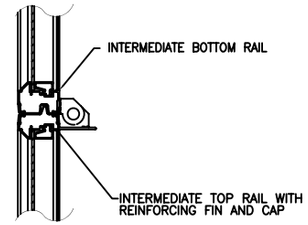

SECTION 3 – 3

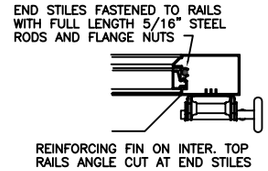

SECTION 4 – 4

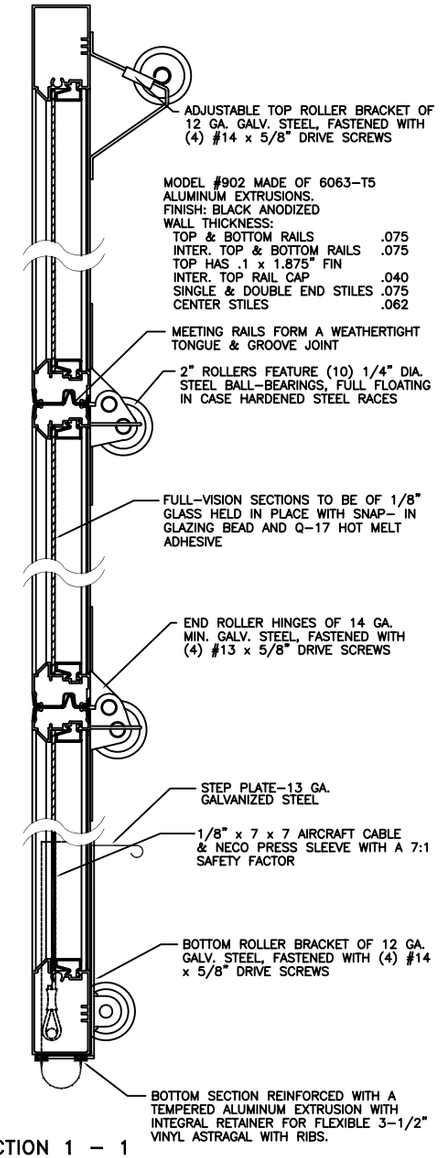

SECTION 1 – 1

IMPORTANT:
PLEASE REFERENCE THE SHOP DRAWING NUMBER ON ALL CORRESPONDENCE. THANK YOU!

(1) DOOR 6'-8" X 4'-6"

ACTUAL DOOR HEIGHT IS APPROX. 1" OVER BECAUSE OF JOINTS BETWEEN SECTIONS PLUS BOTTOM ASTRAGAL

1) DOOR TO BE MODEL #C2AL, FINISH AS FOLLOWS: BLACK ANODIZED
2) DOOR TO BE REVERSE ANGLE MOUNTED FULL-VERTICAL LIFT (B.A.) 2" GALV. STEEL TRACK.
3) DOOR TO USE 60,000 CYCLE TORSION SPRINGS WITH 1" O.D. GALVANIZED STEEL TUBE. SPRINGS TO COUNTER BALANCE DOOR WEIGHT OF (97 LBS.) AND DOOR TO CLEAR (LIFT ABOVE) OPENING BY 6" SPRINGS TO BE AS FOLLOWS:
   (1) 0.207 – 2.00 – 29" L.W.
   (1) 0.207 – 2.00 – 29" R.W.
4) DOOR TO HAVE AN INTERIOR MOUNTED #2 END STILE SLIDE BOLT DOOR LOCK.
5) DOOR TO HAVE (2) FULL-VISION SECTIONS OF 1/8" DSB GLASS LOCATED IN SECTIONS 2,&3. BOTTOM SECTION TO BE 1/8" TEMPERED GLASS.
6) DOOR TO HAVE (2) D850-132 DRUMS WITH A PAIR OF 1/8" 7 X 7 X 16'-4".
7) DOOR TO HAVE REVERSE ANGLE JAMB WEATHER SEAL.
8) CBPC DOOR ITEM NUMBER: C2ALC-CD*

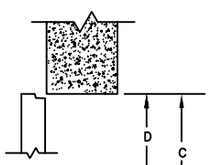

SECTION 5 – 5
HEADER DETAIL

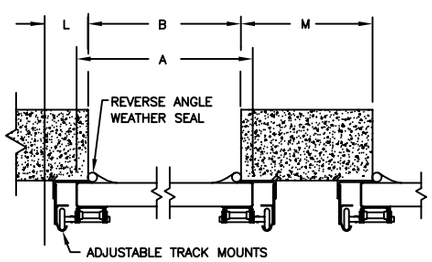

SECTION 6 – 6
JAMB DETAILS

MASONRY JAMBS. FOUR 3/8" MASONRY ANCHORS CAN BE USED FOR ATTACHMENT OF ANCHOR PLATES TO CONCRETE OR BLOCK WALLS.

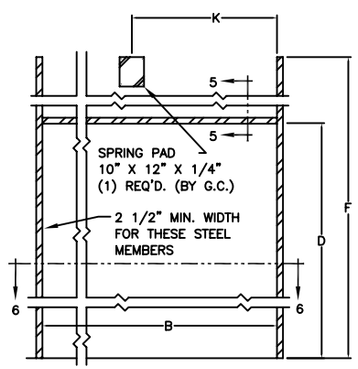

REAR ELEVATION
OPENING PREPARATION

SIDE ELEVATION
FULL-VERTICAL LIFT TRACK

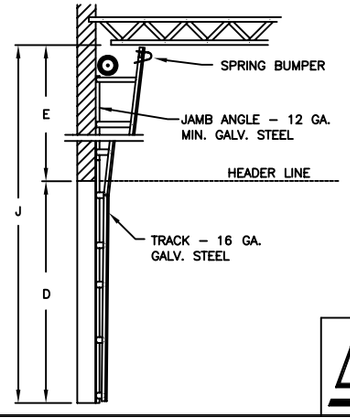

DIM.	DESCRIPTION	DIMENSIONS
A	DOOR WIDTH	6'-8"
B	OPENING WIDTH	6'-8"
	# OF PANELS WIDE	2
C	DOOR HEIGHT	4'-6"
D	OPENING HEIGHT	4'-6"
	# OF SECTIONS HIGH	3
E	HEADROOM (MIN.)	6'-0"
F	JAMB HEIGHT (MIN.)	10'-0"
G		
H		
J	FLOOR TO CEILING (MIN.)	10'-6"
K	SPRING PAD OFFSET	3'-4"
L	SIDEROOM 1 (MIN.)	4 1/2"
M	SIDEROOM 2 (MIN.)	9"
N	OPERATOR BACKROOM (MIN.)	N/A

ARCHITECT:
CONTRACTOR:
CUSTOMER:
ALL SHOP DRAWINGS MUST BE SIGNED AND RETURNED PRIOR TO ANY FABRICATION.

IDEAL Door®

SHOP DRAWING

Clopay Corporation All Rights Reserved
The arrangements depicted herein are the sole property of the Clopay Corporation and may not be reproduced in any form without its written permission.

SCALE: NOT TO SCALE
DATE: 5/24/2011
DRAWN BY: JLG
CHECKED BY: MB
CODE NUMBER: MAX CYCLE
CONTRACTOR:
ARCHITECT:
CUSTOMER: MENARDS
JOB: CART DOORS 1
DRAWING NUMBER: 22907-5R0
5/10

REV	DATE	DESCRIPTION

MODEL C2ALC

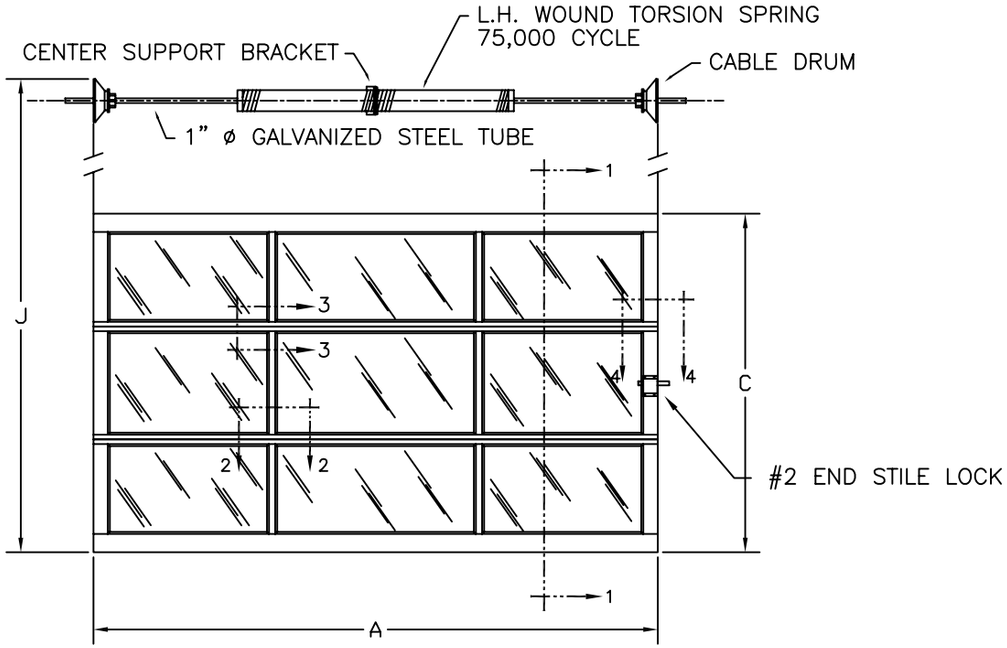

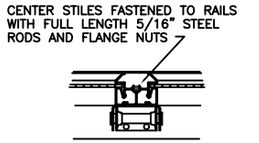

SECTION 2 – 2

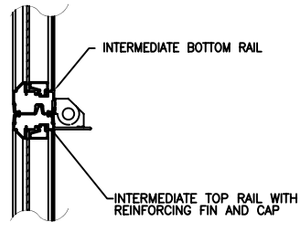

SECTION 3 – 3

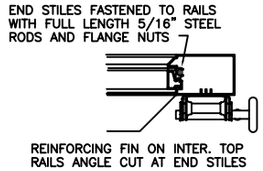

SECTION 4 – 4

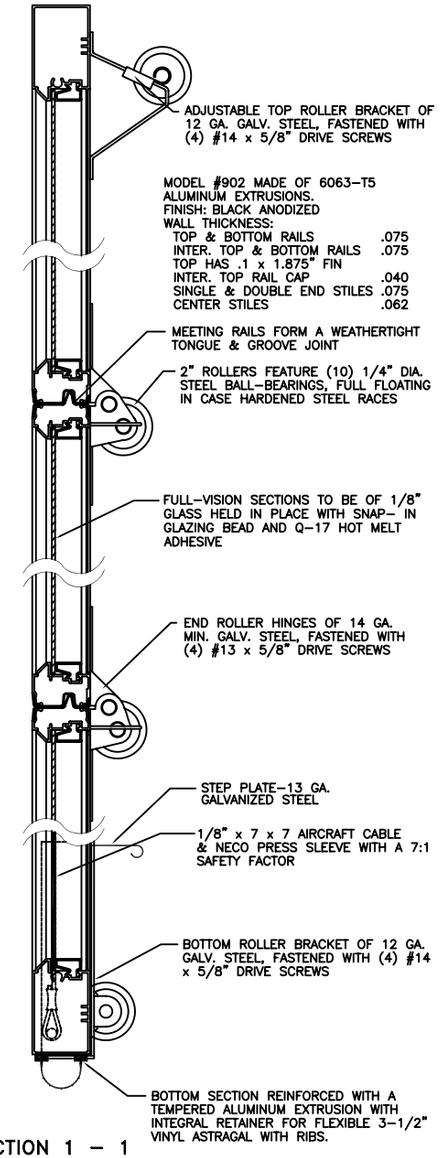

SECTION 1 – 1

IMPORTANT:
PLEASE REFERENCE THE SHOP DRAWING NUMBER ON ALL CORRESPONDENCE. THANK YOU!

(1) DOOR 10'-8" X 4'-6"

ACTUAL DOOR HEIGHT IS APPROX. 1" OVER BECAUSE OF JOINTS BETWEEN SECTIONS PLUS BOTTOM ASTRAGAL

1) DOOR TO BE MODEL #C2AL, FINISH AS FOLLOWS: BLACK ANODIZED
2) DOOR TO BE REVERSE ANGLE MOUNTED FULL-VERTICAL LIFT (B.A.) 2" GALV. STEEL TRACK.
3) DOOR TO USE 75,000 CYCLE TORSION SPRINGS WITH 1" O.D. GALVANIZED STEEL TUBE. SPRINGS TO COUNTER BALANCE DOOR WEIGHT OF (150 LBS.). DOOR TO CLEAR (LIFT ABOVE) OPENING BY 3". SPRINGS TO BE AS FOLLOWS:
   (1) 0.244 – 2.00 – 41" L.W.
   (1) 0.244 – 2.00 – 41" R.W.
4) DOOR TO HAVE AN INTERIOR MOUNTED #2 END STILE SLIDE BOLT DOOR LOCK.
5) DOOR TO HAVE (2) FULL-VISION SECTIONS OF 1/8" DSB GLASS LOCATED IN SECTIONS 2,&3. BOTTOM SECTION TO BE 1/8" TEMPERED GLASS.
6) DOOR TO HAVE (2) D850-132 DRUMS WITH A PAIR OF 1/8" 7 X 7 X 16'-4".
7) DOOR TO HAVE REVERSE ANGLE JAMB WEATHER SEAL.
8) CBPC DOOR ITEM NUMBER: C2ALC-CD*

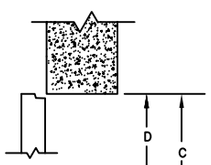

SECTION 5 – 5
HEADER DETAIL

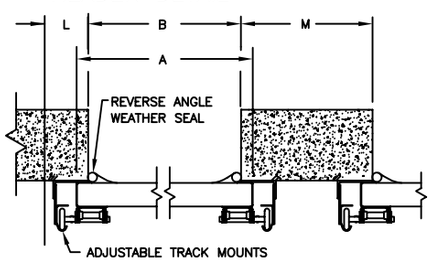

SECTION 6 – 6
JAMB DETAILS

MASONRY JAMBS. FOUR 3/8" MASONRY ANCHORS CAN BE USED FOR ATTACHMENT OF ANCHOR PLATES TO CONCRETE OR BLOCK WALLS.

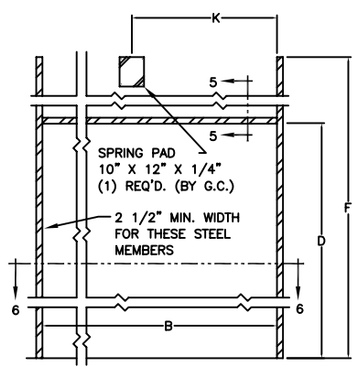

REAR ELEVATION
OPENING PREPARATION

SIDE ELEVATION
FULL-VERTICAL LIFT TRACK

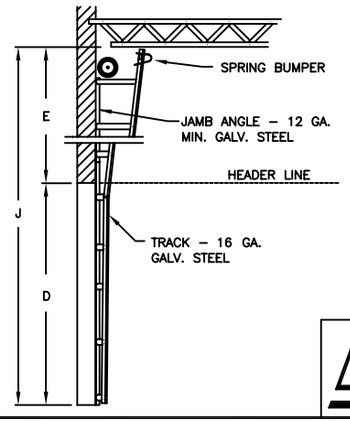

DIM.	DESCRIPTION	DIMENSIONS
A	DOOR WIDTH	10'-8"
B	OPENING WIDTH	10'-8"
	# OF PANELS WIDE	3
C	DOOR HEIGHT	4'-6"
D	OPENING HEIGHT	4'-6"
	# OF SECTIONS HIGH	3
E	HEADROOM (MIN.)	5'-9"
F	JAMB HEIGHT (MIN.)	10'-0"
G		
H		
J	FLOOR TO CEILING (MIN.)	10'-3"
K	SPRING PAD OFFSET	5'-4"
L	SIDEROOM 1 (MIN.)	4 1/2"
M	SIDEROOM 2 (MIN.)	9"
N	OPERATOR BACKROOM (MIN.)	N/A

ARCHITECT:
CONTRACTOR:
CUSTOMER:
ALL SHOP DRAWINGS MUST BE SIGNED AND RETURNED PRIOR TO ANY FABRICATION.

IDEAL Door

SHOP DRAWING

Clopay Corporation All Rights Reserved
The arrangements depicted herein are the sole property of the Clopay Corporation and may not be reproduced in any form without its written permission.

SCALE: NOT TO SCALE
DATE: 5/24/2011
DRAWN BY: JLG
CHECKED BY: MB
CODE NUMBER: MAX CYCLE
CONTRACTOR:
ARCHITECT:
CUSTOMER: MENARDS
JOB: CART DOORS 2
DRAWING NUMBER: 22907-6R0
6/10

REV	DATE	DESCRIPTION

MODEL C4ST

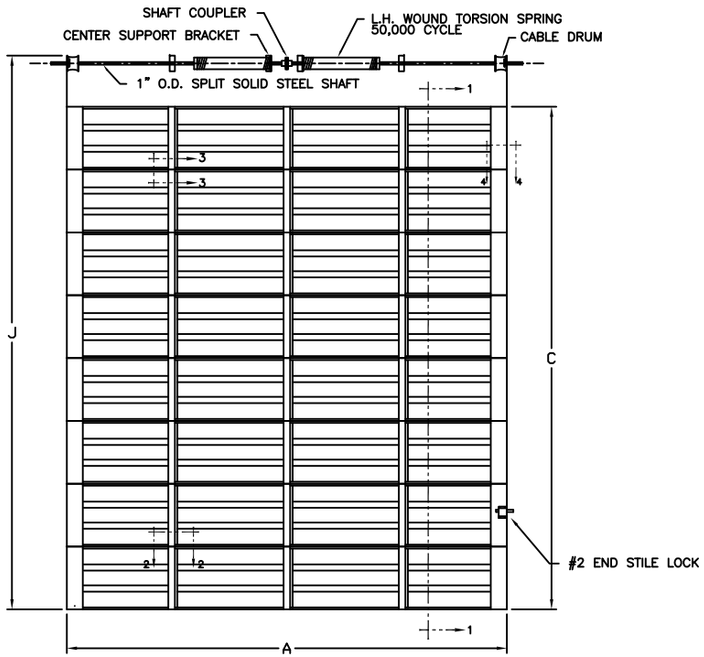

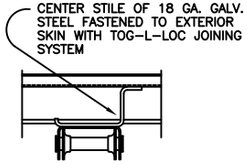

SECTION 2 – 2

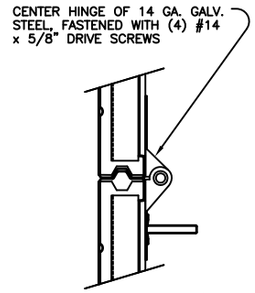

SECTION 3 – 3

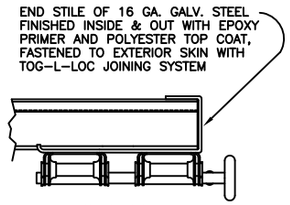

SECTION 4 – 4

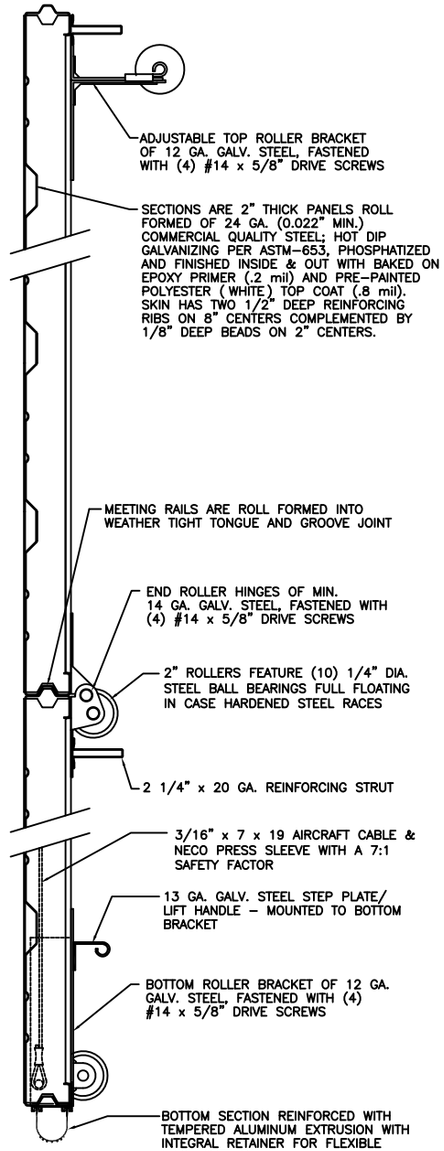

SECTION 1 – 1

IMPORTANT:
PLEASE REFERENCE THE SHOP DRAWING NUMBER ON ALL CORRESPONDENCE. THANK YOU!

(1) DOOR 15'-2" X 15'-0"

ACTUAL DOOR HEIGHT IS APPROX. 1" OVER BECAUSE OF JOINTS BETWEEN SECTIONS PLUS BOTTOM ASTRAGAL

1) DOOR TO BE MODEL C4ST, FINISH PAINTED WHITE.
2) DOOR TO BE REVERSE ANGLE MOUNTED STANDARD LIFT (15"RADIUS.) 2" GALV. STEEL TRACK.
3) DOOR TO USE 50,000 CYCLE TORSION SPRINGS WITH 1" O.D. SPLIT SOLID STEEL SHAFT. SPRINGS TO COUNTER BALANCE DOOR WEIGHT OF (506 LBS.). SPRINGS TO BE AS FOLLOWS:
   (1) .375 – 6.00 – 54" L.H
   (1) .375 – 6.00 – 54" R.H
4) DOOR TO HAVE AN OPTIONAL SPRING BUMPER.
5) DOOR TO HAVE AN INTERIOR MOUNTED #2 END STILE SLIDE BOLT DOOR LOCK.
6) DOOR TO HAVE (2) D525-216 DRUMS WITH A PAIR OF 3/16" 7 X 19 X 16'-11".
7) DOOR TO HAVE A 2 1/4" X 20 GA. GALV. STEEL REINFORCING STRUT PER SECTION.
8) DOOR TO HAVE REVERSE ANGLE JAMB WEATHER SEAL.
9) CBPC DOOR ITEM NUMBER: C4ST-CD*R64846

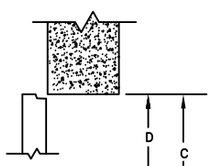

SECTION 5 – 5
HEADER DETAIL

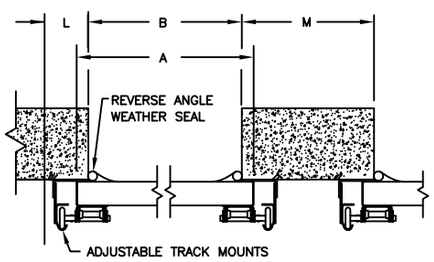

SECTION 6 – 6
JAMB DETAILS

MASONRY JAMBS. FOUR 3/8" MASONRY ANCHORS CAN BE USED FOR ATTACHMENT OF ANCHOR PLATES TO CONCRETE OR BLOCK WALLS.

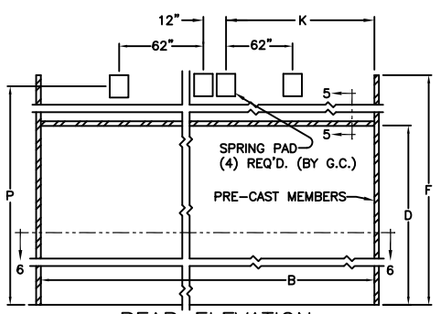

REAR ELEVATION
OPENING PREPARATION

SIDE ELEVATION
STANDARD-LIFT TRACK DETAILS

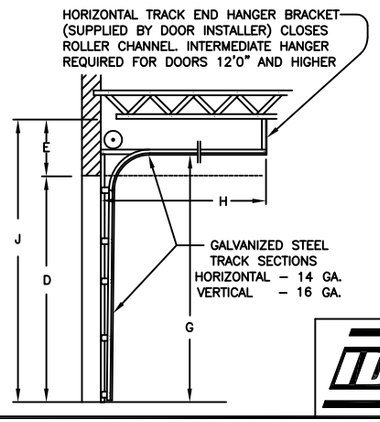

DIM.	DESCRIPTION	DIMENSIONS
A	DOOR WIDTH	15'-2"
B	OPENING WIDTH	15'-0"
	# OF PANELS WIDE	4
C	DOOR HEIGHT	15'-0"
D	OPENING HEIGHT	15'-0"
	# OF SECTIONS HIGH	8
E	HEADROOM (MIN.)	16"
F	JAMB HEIGHT (MIN.)	16'-4"
G	OVERHEAD CLEARANCE	15'-7"
H	BACKROOM (MIN.)	16'-11"
J	FLOOR TO CEILING (MIN.)	16'-4"
K	SPRING PAD OFFSET	7'-0"
L	SIDEROOM 1 (MIN.)	4 1/2"
M	SIDEROOM 2 (MIN.)	9"
N	OPERATOR BACKROOM (MIN.)	N/A

ARCHITECT:
CONTRACTOR:
CUSTOMER:
ALL SHOP DRAWINGS MUST BE SIGNED AND RETURNED PRIOR TO ANY FABRICATION.

IDEAL Door®

SHOP DRAWING

Clopay Corporation All Rights Reserved
The arrangements depicted herein are the sole property of the Clopay Corporation and may not be reproduced in any form without its written permission.

SCALE: NOT TO SCALE
DATE: 5/24/2011
DRAWN BY: JLG
CHECKED BY: MB
CODE NUMBER: MAX CYCLE
CONTRACTOR:
ARCHITECT:
CUSTOMER: MENARDS
JOB: GUARD SHACK
DRAWING NUMBER: 22907-7R0
7/10

REV	DATE	DESCRIPTION

MODEL C2ALC

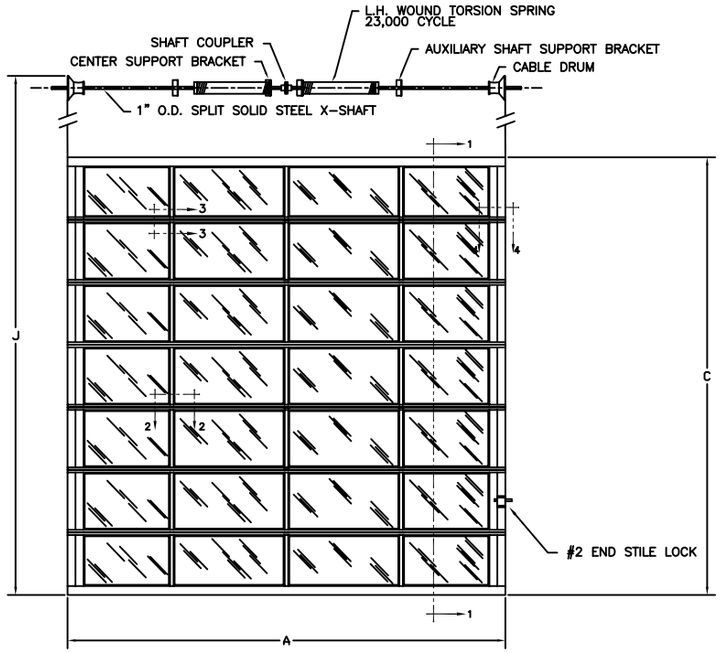

DOOR #13

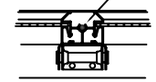

SECTION 2 – 2

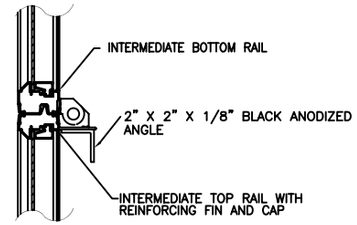

SECTION 3 – 3

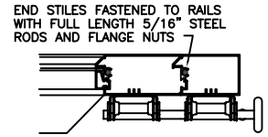

SECTION 4 – 4

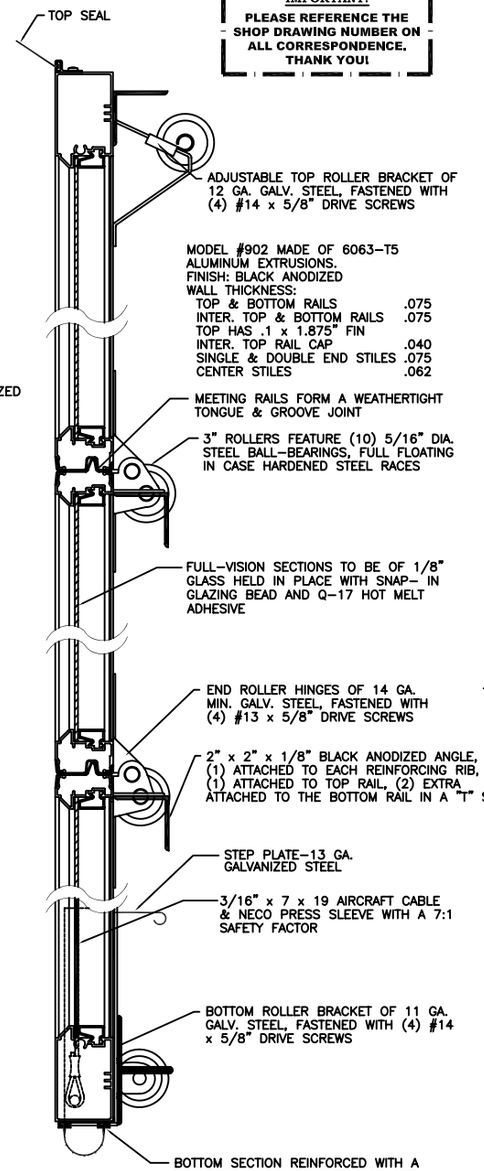

SECTION 1 – 1

IMPORTANT:
PLEASE REFERENCE THE SHOP DRAWING NUMBER ON ALL CORRESPONDENCE. THANK YOU!

(1) DOOR 16'-2" X 12'-3"

ACTUAL DOOR HEIGHT IS APPROX. 1" OVER BECAUSE OF JOINTS BETWEEN SECTIONS PLUS BOTTOM ASTRAGAL

1) DOOR TO BE MODEL #C2AL, FINISH AS FOLLOWS: BLACK ANODIZED
2) DOOR TO BE REVERSE ANGLE MOUNTED WITH 114" OF HIGH LIFT (B.A.) 3" GALV. STEEL TRACK.
3) DOOR TO USE 23,000 CYCLE TORSION SPRINGS WITH 1" O.D. SPLIT EXTENDED SOLID STEEL SHAFT. SPRINGS TO COUNTER BALANCE DOOR WEIGHT OF (657 LBS.) AND DOOR TO CLEAR (LIFT ABOVE) OPENING BY 8". SPRINGS TO BE AS FOLLOWS:
   (1) DUPLEX .375 – 6.00 – 55" L.H. & .307 – 3.75 – 54"
   (1) DUPLEX .375 – 6.00 – 55" L.H. & .307 – 3.75 – 54"
4) DOOR TO HAVE AN INTERIOR MOUNTED #2 END STILE SLIDE BOLT DOOR LOCK.
5) DOOR TO HAVE (6) FULL-VISION SECTIONS OF 1/8" DSB GLASS LOCATED IN SECTIONS 2,3,4,5,6,&7. BOTTOM SECTION TO BE 1/8" TEMPERED GLASS.
6) DOOR TO HAVE (2) D575-120 DRUMS WITH A PAIR OF 3/16" 7 X 19 X 23'-10".
7) DOOR TO HAVE A VINYL TOP SEAL AND A REVERSE ANGLE JAMB WEATHER SEAL.
8) DOOR TO HAVE A 2" X 2" X 1/8" BLACK ANODIZED ANGLE REINFORCING STRUT PER SECTION WITH AN ADDITIONAL (2) ANGLES PLACED IN A "T" SHAPE ON THE BOTTOM RAIL.
9) DOOR TO HAVE (2) AUXILIARY SHAFT SUPPORTS
10) CBPC DOOR ITEM NUMBER: C2ALC-CD*

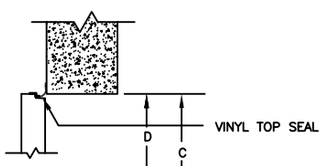

SECTION 5 – 5
HEADER DETAIL

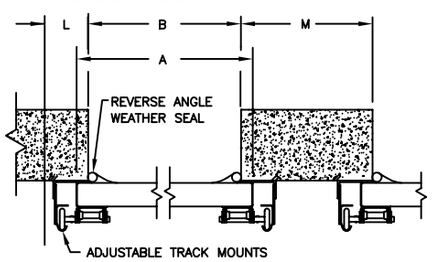

SECTION 6 – 6
JAMB DETAILS

MASONRY JAMBS. FOUR 3/8" MASONRY ANCHORS CAN BE USED FOR ATTACHMENT OF ANCHOR PLATES TO CONCRETE OR BLOCK WALLS.

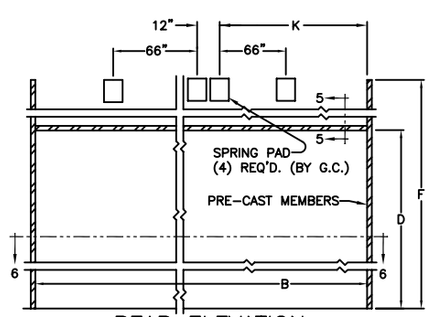

REAR ELEVATION
OPENING PREPARATION

SIDE ELEVATION
HIGH-LIFT TRACK DETAILS

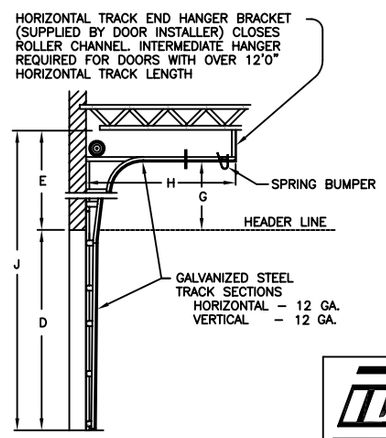

DIM.	DESCRIPTION	DIMENSIONS
A	DOOR WIDTH	16'-2"
B	OPENING WIDTH	16'-2"
	# OF PANELS WIDE	4
C	DOOR HEIGHT	12'-3"
D	OPENING HEIGHT	12'-3"
	# OF SECTIONS HIGH	7
E	HEADROOM (MIN.)	10'-6"
F	JAMB HEIGHT (MIN.)	22'-9"
G	HIGHLIFT	115"
H	BACKROOM (MIN.)	6'-6"
J	FLOOR TO CEILING (MIN.)	22'-9"
K	SPRING PAD OFFSET	7'-6"
L	SIDEROOM 1 (MIN.)	5 1/2"
M	SIDEROOM 2 (MIN.)	11"
N	OPERATOR BACKROOM (MIN.)	N/A

ARCHITECT:
CONTRACTOR:
CUSTOMER:
ALL SHOP DRAWINGS MUST BE SIGNED AND RETURNED PRIOR TO ANY FABRICATION.

IDEAL Door

SHOP DRAWING

Clopay Corporation All Rights Reserved
The arrangements depicted herein are the sole property of the Clopay Corporation and may not be reproduced in any form without its written permission.

SCALE: NOT TO SCALE
DATE: 5/24/2011
DRAWN BY: JLG
CHECKED BY: MB
CODE NUMBER: MAX CYCLE
CONTRACTOR:
ARCHITECT:
CUSTOMER: MENARDS
JOB: DOOR 13
DRAWING NUMBER: 22907-8R0
8/10

REV	DATE	DESCRIPTION

MODEL C2ALC

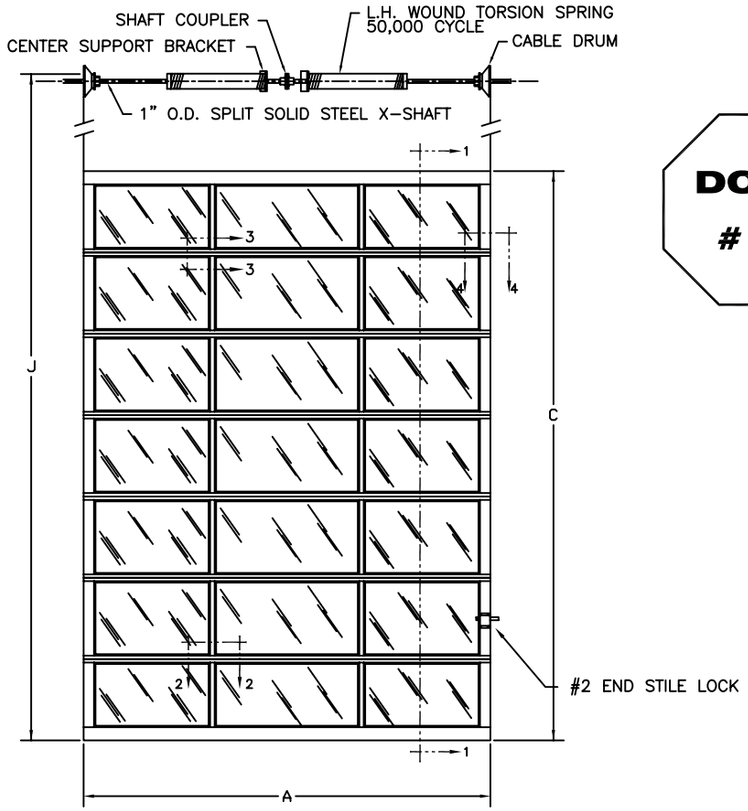

DOOR #16

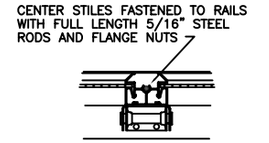

SECTION 2 – 2

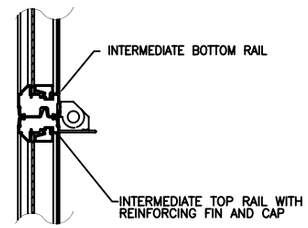

SECTION 3 – 3

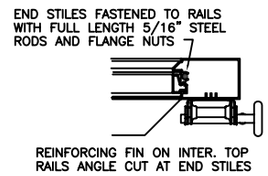

SECTION 4 – 4

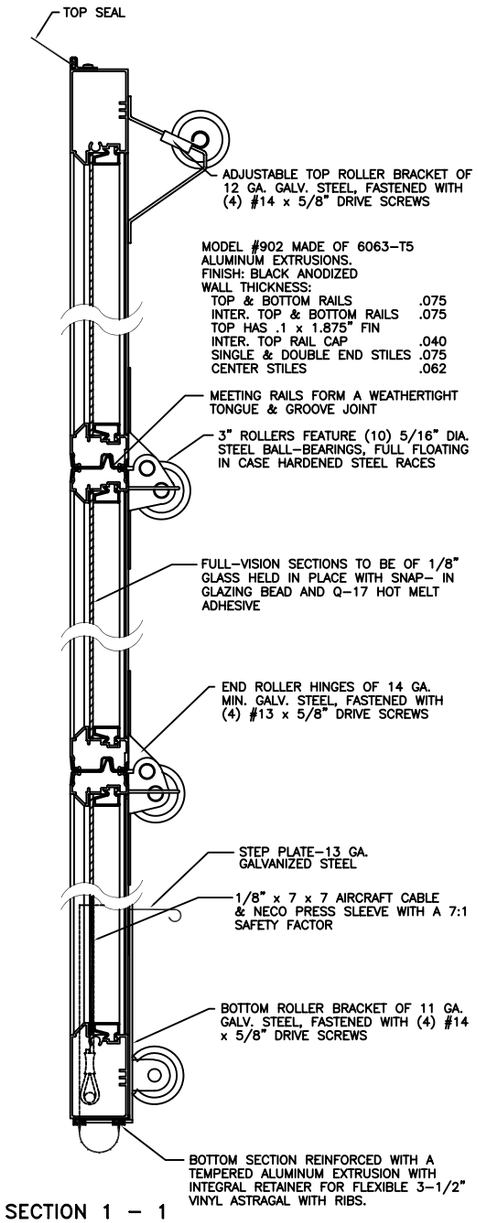

SECTION 1 – 1

IMPORTANT:
PLEASE REFERENCE THE SHOP DRAWING NUMBER ON ALL CORRESPONDENCE. THANK YOU!

(2) DOORS 12'-2" X 12'-3"

ACTUAL DOOR HEIGHT IS APPROX. 1" OVER BECAUSE OF JOINTS BETWEEN SECTIONS PLUS BOTTOM ASTRAGAL

1) DOOR TO BE MODEL #C2AL, FINISH AS FOLLOWS: BLACK ANODIZED
2) DOOR TO BE REVERSE ANGLE MOUNTED WITH 114" OF HIGH LIFT (B.A.) 3" GALV. STEEL TRACK.
3) DOOR TO USE 50,000 CYCLE TORSION SPRINGS WITH 1" O.D. SPLIT EXTENDED SOLID STEEL SHAFT. SPRINGS TO COUNTER BALANCE DOOR WEIGHT OF (428 LBS.). DOOR TO CLEAR (LIFT ABOVE) OPENING BY 8". SPRINGS TO BE AS FOLLOWS:
   (1) 0.344 – 6.00 – 52" & .273 – 3.75 – 51" L.H.
   (1) 0.344 – 6.00 – 52" & .273 – 3.75 – 51" R.H.
4) DOOR TO HAVE AN INTERIOR MOUNTED #2 END STILE SLIDE BOLT DOOR LOCK.
5) DOOR TO HAVE (6) FULL-VISION SECTIONS OF 1/8" DSB GLASS LOCATED IN SECTIONS 2,3,4,5,6,&7. BOTTOM SECTION TO BE 1/8" TEMPERED GLASS.
6) DOOR TO HAVE (2) D575-120 DRUMS WITH A PAIR OF 1/8" 7 X 7 X 23'-9".
7) DOOR TO HAVE A VINYL TOP SEAL AND A REVERSE ANGLE JAMB WEATHER SEAL.
8) CBPC DOOR ITEM NUMBER: C2ALC-CD*

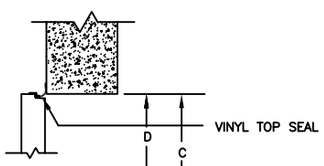

SECTION 5 – 5
HEADER DETAIL

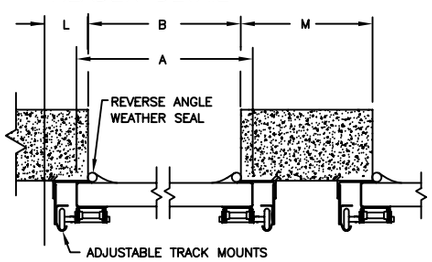

SECTION 6 – 6
JAMB DETAILS

MASONRY JAMBS. FOUR 3/8" MASONRY ANCHORS CAN BE USED FOR ATTACHMENT OF ANCHOR PLATES TO CONCRETE OR BLOCK WALLS.

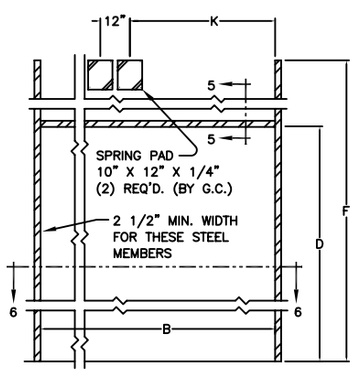

REAR ELEVATION
OPENING PREPARATION

SIDE ELEVATION
HIGH-LIFT TRACK DETAILS

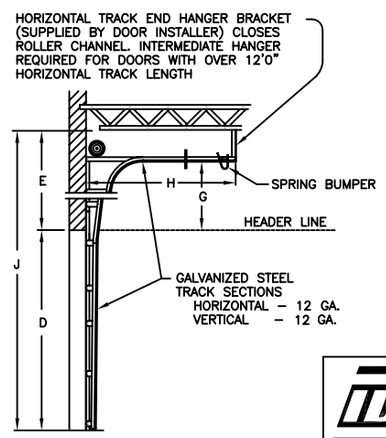

DIM.	DESCRIPTION	DIMENSIONS
A	DOOR WIDTH	12'-2"
B	OPENING WIDTH	12'-2"
	# OF PANELS WIDE	3
C	DOOR HEIGHT	12'-3"
D	OPENING HEIGHT	12'-3"
	# OF SECTIONS HIGH	7
E	HEADROOM (MIN.)	10'-6"
F	JAMB HEIGHT (MIN.)	22'-9"
G	HIGHLIFT	114"
H	BACKROOM (MIN.)	6'-7"
J	FLOOR TO CEILING (MIN.)	22'-9"
K	SPRING PAD OFFSET	5'-6"
L	SIDEROOM 1 (MIN.)	5 1/2"
M	SIDEROOM 2 (MIN.)	11"
N	OPERATOR BACKROOM (MIN.)	N/A

ARCHITECT:
CONTRACTOR:
CUSTOMER:
ALL SHOP DRAWINGS MUST BE SIGNED AND RETURNED PRIOR TO ANY FABRICATION.

IDEAL Door

SHOP DRAWING

Clopay Corporation All Rights Reserved
The arrangements depicted herein are the sole property of the Clopay Corporation and may not be reproduced in any form without its written permission.

SCALE: NOT TO SCALE
DATE: 5/24/2011
DRAWN BY: JLG
CHECKED BY: MB
CODE NUMBER: MAX CYCLE
CONTRACTOR:
ARCHITECT:
CUSTOMER: MENARDS
JOB: DOOR 16
DRAWING NUMBER: 22907-9R0
9/10

REV	DATE	DESCRIPTION

MODEL C2ALC

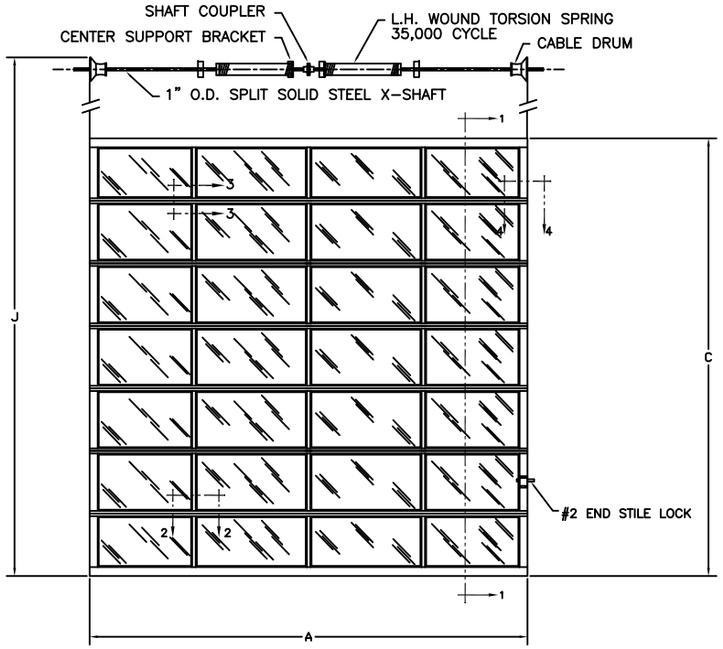

DOOR #15

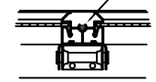

COR-LOVLY CENTER HINGE OF 16 GA. GALV. STEEL, ATTACHED TO INTER. BOTTOM RAIL WITH (2) #14 x 5/8" DRIVE SCREWS AND TO INTER. TOP RAIL WITH (2) 1/4-20 x 1/2" HEX HEAD MACHINE SCREWS & NUTS

SECTION 2 – 2

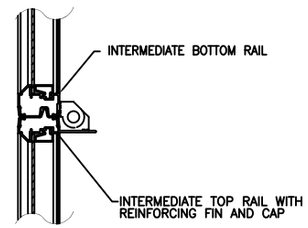

SECTION 3 – 3

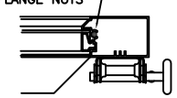

SECTION 4 – 4

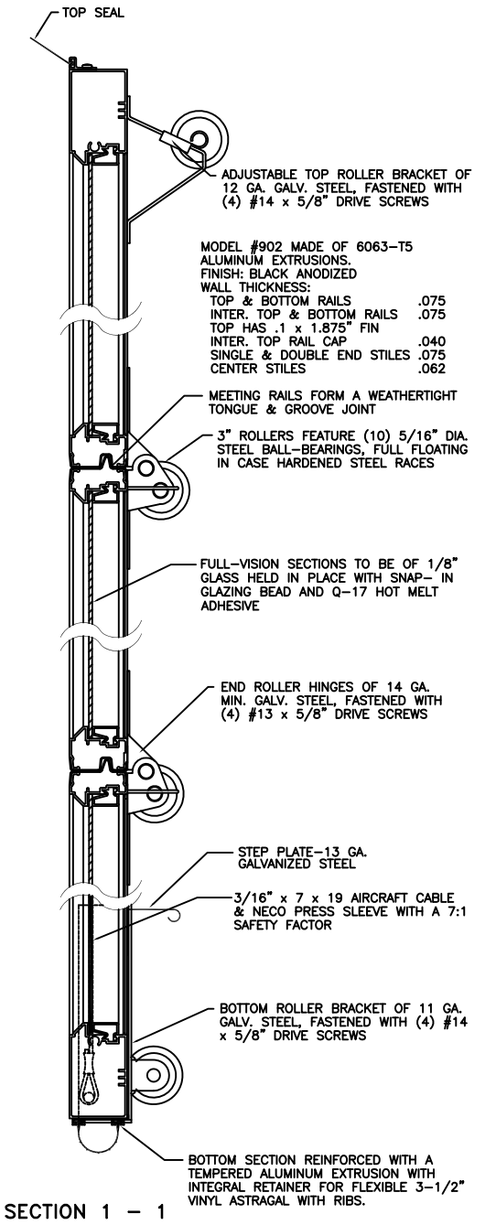

SECTION 1 – 1

IMPORTANT:
PLEASE REFERENCE THE SHOP DRAWING NUMBER ON ALL CORRESPONDENCE. THANK YOU!

(2) DOORS 14'-2" X 12'-3"

ACTUAL DOOR HEIGHT IS APPROX. 1" OVER BECAUSE OF JOINTS BETWEEN SECTIONS PLUS BOTTOM ASTRAGAL

1) DOOR TO BE MODEL #C2AL, FINISH AS FOLLOWS: BLACK ANODIZED
2) DOOR TO BE REVERSE ANGLE MOUNTED WITH 114" OF HIGH LIFT (B.A.) 3" GALV. STEEL TRACK.
3) DOOR TO USE 35,000 CYCLE TORSION SPRINGS WITH 1" O.D. SPLIT EXTENDED SOLID STEEL SHAFT. SPRINGS TO COUNTER BALANCE DOOR WEIGHT OF (529 LBS.). DOOR TO CLEAR (LIFT ABOVE) OPENING BY 8". SPRINGS TO BE AS FOLLOWS:
   (1) 0.375 – 6.00 – 56" & .295 – 3.75 – 55" L.H.
   (1) 0.375 – 6.00 – 56" & .295 – 3.75 – 55" R.H.
4) DOOR TO HAVE AN INTERIOR MOUNTED #2 END STILE SLIDE BOLT DOOR LOCK.
5) DOOR TO HAVE (6) FULL-VISION SECTIONS OF 1/8" DSB GLASS LOCATED IN SECTIONS 2,3,4,5,6,&7. BOTTOM SECTION TO BE 1/8" TEMPERED GLASS.
6) DOOR TO HAVE (2) D6375-164 DRUMS WITH A PAIR OF 3/16" 7 X 19 CABLES.
7) DOOR TO HAVE A VINYL TOP SEAL AND A REVERSE ANGLE JAMB WEATHER SEAL.
8) CBPC DOOR ITEM NUMBER: C2ALC-CD*

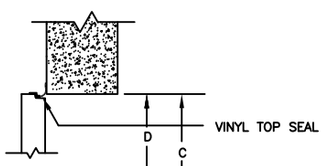

SECTION 5 – 5
HEADER DETAIL

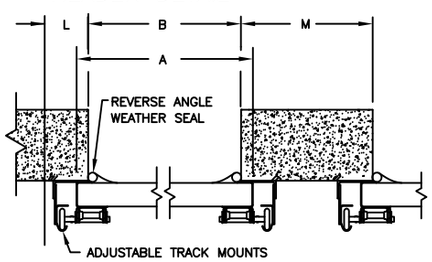

SECTION 6 – 6
JAMB DETAILS

MASONRY JAMBS. FOUR 3/8" MASONRY ANCHORS CAN BE USED FOR ATTACHMENT OF ANCHOR PLATES TO CONCRETE OR BLOCK WALLS.

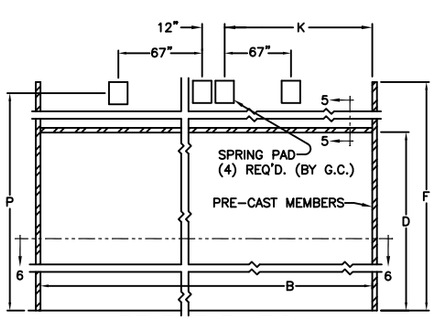

REAR ELEVATION
OPENING PREPARATION

SIDE ELEVATION
HIGH-LIFT TRACK DETAILS

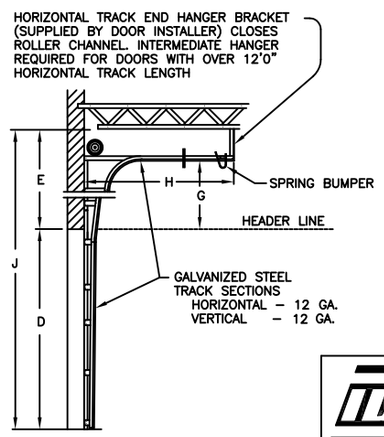

DIM.	DESCRIPTION	DIMENSIONS
A	DOOR WIDTH	14'-2"
B	OPENING WIDTH	14'-2"
	# OF PANELS WIDE	4
C	DOOR HEIGHT	12'-3"
D	OPENING HEIGHT	12'-3"
	# OF SECTIONS HIGH	7
E	HEADROOM (MIN.)	10'-6"
F	JAMB HEIGHT (MIN.)	22'-9"
G	HIGHLIFT	114"
H	BACKROOM (MIN.)	6'-7"
J	FLOOR TO CEILING (MIN.)	22'-9"
K	SPRING PAD OFFSET	6'-6"
L	SIDEROOM 1 (MIN.)	5 1/2"
M	SIDEROOM 2 (MIN.)	11"
N	OPERATOR BACKROOM (MIN.)	N/A

ARCHITECT:
CONTRACTOR:
CUSTOMER:
ALL SHOP DRAWINGS MUST BE SIGNED AND RETURNED PRIOR TO ANY FABRICATION.

IDEAL Door®

SHOP DRAWING

Clopay Corporation All Rights Reserved
The arrangements depicted herein are the sole property of the Clopay Corporation and may not be reproduced in any form without its written permission.

SCALE: NOT TO SCALE
DATE: 5/24/2011
DRAWN BY: JLG
CHECKED BY: MB
CODE NUMBER: MAX CYCLE
CONTRACTOR:
ARCHITECT:
CUSTOMER: MENARDS
JOB: DOOR 15
DRAWING NUMBER: 22907-10R0
10/10

Clopay Building Products
A Griffon Company

Commercial Door
Special Approval Request
Engineering Analysis

Configuration: Menards Stock Door #3, Max Cycle Springs, one shaft line, single springs only
C2ALC - 12'-2" x 10'-3" + door to clear opening by 17".

Request: Max Cycle Springs on 1 Shaft, 50K Spring Target, Single springs only

Reviewed By: Mike Burns, 5/16/2011

Request Status: **APPROVED per configuration below.**

Size Review: This ALUM door is within the size limitations as conveyed in ES01021

Spring Weight:

Total Door Weight:	362	Lbs.	(via Oracle)
Qty of Door Sections:	6		
Avg. Section Weight:	60	Lbs.	
Open Weight:	362	Lbs.	
Horizontal Weight:	-	Lbs.	(Value is less than maximum value of 2000 Lbs.)
Weight per Cable:	181	Lbs.	

Reinforcement: Per standard specifications

Track: 3" Full Vertical Lift

Backhang: Per standard specifications

Bottom Brkts: One pair of CCB-3-95 (Rated for 1800 lbs. per 2 cables)

Drums: Qty 2 D11-216 Vertical Lift Drums Required

Cable: Qty 1 Pair: 1/8 x 7 x 7 Cables Required (Rated for 485 Lbs. per pair)

Springs:

Total MIP:	1563	In-Lbs
Spring IPPT:	135.8	In-Lbs / Rev
Spring Turns:	11.51	Revs
Spring Cycles:	55,000 (Max for 2 single springs)	
Total Spring Qty:	2 Single	
Spring Sizes:	0.375 x 6.00 x 51.50	

Stretched Spring:	59.29	In (Includes spring cones)
Spring Weight:	90.25	Lbs. (Includes spring cones)

Shaft:

Size / Type:	1” solid steel shaft with coupler	
Shaft Config:	Single Shaft	
Qty Shaft Brkts:	2 per door (Qty 2 per shaft)	
Shaft B Deflect:	0.37	In (bending - 0.550" permitted)
Shaft Torsion	0.47	Deg / Ft (2.0 deg / ft permitted)
Available Shaft:	132	In
Max Span:	66	In (between supports)
Comp L Sum:	139.2	In (springs, stretch, drums, coupler, brackets, etc.)

Support Brkt Locations (off centerline): Standard

Rollers: Roller Load: 0.27 Lbs. per Roller (y-axis only)
Config to use 3” Steel 10 Ball Bearing Roller, load is less than 100 Lbs/Roller

Clopay® BUILDING PRODUCTS A Griffon Company

Commercial Door
Special Approval Request
Engineering Analysis

Configuration: Menards Stock Door # Cart 1, Max Cycle Springs, one shaft line,
C2ALC - 6'-8" x 4'-6" + door to clear opening by 6"

Request: Max Cycle Springs on 1 Shaft, 50K Target, Single springs preferred

Reviewed By: Mike Burns, 5/17/2011

Request Status: **APPROVED per configuration below.**

Size Review: This ALUM door is within the size limitations as conveyed in ES01021

Spring Weight:

Total Door Weight:	97	Lbs.	(via Oracle)
Qty of Door Sections:	3		
Avg. Section Weight:	32	Lbs.	
Open Weight:	97	Lbs.	
Horizontal Weight:	-	Lbs.	(Value is less than maximum value of 2000 Lbs.)
Weight per Cable:	49	Lbs.	

Reinforcement: Per standard specifications

Track: 2" Full Vertical Lift

Backhang: Per standard specifications

Bottom Brkts: One pair of CCB-2-95 (Rated for 800 lbs. per 2 cables)

Drums: Qty 2 D850-132 Vertical Lift Drums Required

Cable: Qty 1 Pair: 1/8 x 7 x 7 Cables Required (Rated for 485 Lbs. per pair)

Springs:

Total MIP:	290	In-Lbs
Spring IPPT:	36.38	In-Lbs / Rev
Spring Turns:	8	Revs
Spring Cycles:	60,000	
Total Spring Qty:	2 Singles	
Spring Sizes:	0.207 x 2.00 x 29.00	
Stretched Spring:	32.20	In (Includes spring cones)
Spring Weight:	9.92	Lbs. (Includes spring cones)

Shaft:

Size / Type:	16 ga Tube	
Shaft Config:	Single Shaft	
Qty Shaft Brkts:	1	
Shaft B Deflect:	-	In
Shaft Torsion	0.21	Deg / Ft (2.0 deg / ft permitted)
Available Shaft:	80	In
Max Span:	40	In (between supports)
Comp L Sum:	71	In (springs, stretch, drums, coupler, brackets, etc.)

Support Brkt Locations (off centerline): Standard

Rollers: Roller Load: 0.19 Lbs. per Roller (y-axis only)
Config to use 2” Steel 10 Ball Bearing Roller, load is less than 50 Lbs/Roller

Clopay® BUILDING PRODUCTS A Griffon Company

Commercial Door
Special Approval Request
Engineering Analysis

Configuration: Menards Stock Door #16, Max Cycle Springs, one shaft line,
C2ALC - 12'-2" x 12'-3" + *Door to clear opening by 8"
High Lift = 115"

Request: Max Springs on 1 Shaft, 50K Spring Target, Single springs preferred, duplex acceptable

Reviewed By: Mike Burns, 5/23/2011

Request Status: **APPROVED per configuration below.**

Size Review: This ALUM door is within the size limitations as conveyed in ES01021

Spring Weight:

Total Door Weight:	428	Lbs.	(via Oracle)
Qty of Door Sections:	7		
Avg. Section Weight:	61	Lbs.	
Open Weight:	361	Lbs.	@115" HL
Open Weight:	337	Lbs.	@107" HL

Ran spring config with 12'-11" H and 337 lbs Open Weight

Weight per Cable: 214 Lbs.

Reinforcement: Per standard specifications

Track: 3" With 115" of High Lift*

Backhang: Per standard specifications

Bottom Brkts: One pair of CBB-93-3 (Rated for 1500 lbs. per 2 cables)

Drums: Qty 2 D575-120 High Lift Drums Required

Cable: Qty 1 Pair: 1/8 x 7 x 7 Cables Required (Rated for 485 Lbs. per pair)

Springs:

Total MIP:	1926	In-Lbs
Spring IPPT:	131.4	In-Lbs / Rev
Spring Turns:	14.66	Revs
Spring Cycles:	50,000	(Max On 1 Shaft Line)

Total Spring Qty: 2 Duplex

Spring Sizes:	0.344	x	6.00	x	52.00
	0.273	x	3.75	x	51.00

Stretched Spring:	61.05	In (Includes spring cones)
Spring Weight:	65.7	Lbs. (Includes spring cones)

Shaft:

Size / Type:	1.00” steel shaft with coupler	
Shaft Config:	Single Shaft	
Qty Shaft Brkts:	2 per door (Qty 2 per shaft)	
Shaft B Deflect:	0.33	In (bending - 0.558" permitted)
Shaft Torsion	0.59	Deg / Ft (2.0 deg / ft permitted)
Available Shaft:	146	In
Max Span:	67	In (between supports)
Comp L Sum:	141.5	In (springs, stretch, drums, coupler, brackets, etc.)

Support Brkt Locations: (from door centerline): (#1 at 6”)

Rollers: Roller Load: 30.6 Lbs. per Roller (y-axis only)
Config to use 3” Steel 10 Ball Bearing Roller, load is less than 100 Lbs/Roller

Clopay® BUILDING PRODUCTS A Griffon Company

Commercial Door
Special Approval Request
Engineering Analysis

Configuration: Menards Stock Door #15, Max Cycle Springs, one shaft line,
C2ALC - 14'-2" x 12'-3" + *Door to clear opening by 8"
High Lift = 115"

Request: Springs on 1 Shaft, 50K Spring Target, Single springs preferred, duplex acceptable

Reviewed By: Mike Burns, 5/20/2011

Request Status: **APPROVED per configuration below.**

Size Review: This ALUM door is within the size limitations as conveyed in ES01021

Spring Weight:

Total Door Weight:	529	Lbs.	(via Oracle)
Qty of Door Sections:	7		
Avg. Section Weight:	76	Lbs.	
Open Weight:	446	Lbs.	@115" HL
Open Weight:	417	Lbs.	@107" HL

Ran spring config with 12'-11" H and 417 lbs Open Weight

Weight per Cable: 265 Lbs.

Reinforcement: Per standard specifications

Track: 3" With 115" of High Lift*

Backhang: Per standard specifications

Bottom Brkts: One pair of CBB-93-3 (Rated for 1500 lbs. per 2 cables)

Drums: Qty 2 D6375-164 High Lift Drums Required

Cable: Qty 1 Pair: 3/16 x 7 x 19 Cables Required (Rated for 1200 Lbs. per pair)

Springs:

Total MIP:	2570	In-Lbs
Spring IPPT:	185.7	In-Lbs / Rev
Spring Turns:	13.84	Revs
Spring Cycles:	35,000	(Max On 1 Shaft Line)

Total Spring Qty: 2 Duplex

Spring Sizes:	0.375	x	6.00	x	56.00
	0.295	x	3.75	x	55.00

Stretched Spring:	64.85	In (Includes spring cones)
Spring Weight:	144	Lbs. (Includes spring cones)

Shaft:

Size / Type:	1.00” steel shaft with coupler	
Shaft Config:	Single Shaft	
Qty Shaft Brkts:	4 per door (Qty 4 per shaft)	
Shaft B Deflect:	0.531	In (bending - 0.550" permitted)
Shaft Torsion	0.78	Deg / Ft (2.0 deg / ft permitted)
Available Shaft:	170	In
Max Span:	66	In (between supports)
Comp L Sum:	159.9	In (springs, stretch, drums, coupler, brackets, etc.)

Support Brkt Locations: (from door centerline): (#1 at 6”), and (#2 at 72")

Rollers: Roller Load: 37.8 Lbs. per Roller (y-axis only)

Config to use 3” Steel 10 Ball Bearing Roller, load is less than 100 Lbs/Roller

Clopay® BUILDING PRODUCTS A Griffon Company

Commercial Door
Special Approval Request
Engineering Analysis

Configuration: Menards Stock Door #13, Max Cycle Springs, one shaft line,
C2ALC - 16'-2" x 12'-3" + *Door to clear opening by 8"
High Lift = 115"

Request: Springs on 1 Shaft, 50K Spring Target, Single springs preferred, duplex acceptable

Reviewed By: Mike Burns, 5/23/2011

Request Status: **APPROVED per configuration below.**

Size Review: This ALUM door is within the size limitations as conveyed in ES01021

Spring Weight:

Total Door Weight:	657	Lbs.	(via Oracle)
Qty of Door Sections:	7		
Avg. Section Weight:	94	Lbs.	
Open Weight:	554	Lbs.	@115" HL
Open Weight:	518	Lbs.	@107" HL

Ran spring config with 12'-11" H and 518 lbs Open Weight

Weight per Cable: 329 Lbs.

Reinforcement: Per standard specifications

Track: 3" With 115" of High Lift*

Backhang: Per standard specifications

Bottom Brkts: One pair of CBB-93-3 (Rated for 1500 lbs. per 2 cables)

Drums: Qty 2 D575-120 High Lift Drums Required

Cable: Qty 1 Pair: 3/16 x 7 x 19 Cables Required (Rated for 1200 Lbs. per pair)

Springs:

Total MIP:	2957	In-Lbs
Spring IPPT:	201.4	In-Lbs / Rev
Spring Turns:	14.68	Revs
Spring Cycles:	23,000	
Total Spring Qty:	2 Duplex	

Spring Sizes:	0.375	x	6.00	x	55.00
	0.307	x	3.75	x	54.00

Stretched Spring:	64.35	In (Includes spring cones)
Spring Weight:	100.7	Lbs. (Includes spring cones)

Shaft:

Size / Type:	1.00” steel shaft with coupler	
Shaft Config:	Single Shaft	
Qty Shaft Brkts:	4 per door (Qty 4 per shaft)	
Shaft B Deflect:	0.452	In (bending - 0.550" permitted)
Shaft Torsion	0.9	Deg / Ft (2.0 deg / ft permitted)
Available Shaft:	194	In
Max Span:	66	In (between supports)
Comp L Sum:	154.1	In (springs, stretch, drums, coupler, brackets, etc.)

Support Brkt Locations: (from door centerline): (#1 at 6”), and (#2 at 72")

Rollers: Roller Load: 46.9 Lbs. per Roller (y-axis only)
Config to use 3” Steel 10 Ball Bearing Roller, load is less than 100 Lbs/Roller

Clopay® BUILDING PRODUCTS A Griffon Company

Commercial Door
Special Approval Request
Engineering Analysis

Configuration: Menards Stock Door #30 & 31, Max Cycle Springs, one shaft line, single springs only
C2ALC - 12'-2" x 12'-3" + door to clear opening by 8"

Request: Max Cycle Springs on 1 Shaft, 50K Spring Target, Single springs only

Reviewed By: Mike Burns, 5/17/2011

Request Status: **APPROVED per configuration below.**

Size Review: This ALUM door is within the size limitations as conveyed in ES01021

Spring Weight:

Total Door Weight:	428	Lbs.	(via Oracle)
Qty of Door Sections:	7		
Avg. Section Weight:	71	Lbs.	
Open Weight:	428	Lbs.	
Horizontal Weight:	-	Lbs.	(Value is less than maximum value of 2000 Lbs.)
Weight per Cable:	214	Lbs.	

Reinforcement: Per standard specifications

Track: 3" Full Vertical Lift

Backhang: Per standard specifications

Bottom Brkts: One pair of CCB-3-95 (Rated for 1800 lbs. per 2 cables)

Drums: Qty 2 D1100-216 Vertical Lift Drums Required

Cable: Qty 1 Pair: 1/8 x 7 x 7 Cables Required (Rated for 485 Lbs. per pair)

Springs:

Total MIP:	1934	In-Lbs
Spring IPPT:	160.5	In-Lbs / Rev
Spring Turns:	12.05	Revs
Spring Cycles:	25,000	
Total Spring Qty:	2 Singles	
Spring Sizes:	0.375 x 6.00 x 44.00	
Stretched Spring:	51.71	In (Includes spring cones)
Spring Weight:	77.23	Lbs. (Includes spring cones)

Shaft:

Size / Type:	1" solid steel shaft with coupler	
Shaft Config:	Single Shaft	
Qty Shaft Brkts:	2 per door (Qty 2 per shaft)	
Shaft B Deflect:	0.376	In (bending - 0.458 " permitted)
Shaft Torsion	0.559	Deg / Ft (2.0 deg / ft permitted)
Available Shaft:	146	In
Max Span:	67	In (between supports)
Comp L Sum:	124	In (springs, stretch, drums, coupler, brackets, etc.)
Support Brkt Locations (off centerline):	Standard	

Rollers: Roller Load: 0.42 Lbs. per Roller (y-axis only)
Config to use 3" Steel 10 Ball Bearing Roller, load is less than 100 Lbs/Roller

Clopay® BUILDING PRODUCTS A Griffon Company

Commercial Door
Special Approval Request
Engineering Analysis

Configuration: Menards Stock Door #10, Max Cycle Springs, one shaft line, single springs only
C2ALC - 10'-2" x 10'-3" + door to clear opening by 8"

Request: Max Cycle Springs on 1 Shaft, 50K Spring Target, Single springs only

Reviewed By: Mike Burns, 5/16/2011

Request Status: **APPROVED per configuration below.**

Size Review: This ALUM door is within the size limitations as conveyed in ES01021

Spring Weight:

Total Door Weight:	307	Lbs.	(via Oracle)
Qty of Door Sections:	6		
Avg. Section Weight:	51	Lbs.	
Open Weight:	307	Lbs.	
Horizontal Weight:	-	Lbs.	(Value is less than maximum value of 2000 Lbs.)
Weight per Cable:	154	Lbs.	

Reinforcement: Per standard specifications

Track: 3" Full Vertical Lift

Backhang: Per standard specifications

Bottom Brkts: One pair of CCB-3-95 (Rated for 1800 lbs. per 2 cables)

Drums: Qty 2 D1100-216 Vertical Lift Drums Required

Cable: Qty 1 Pair: 1/8 x 7 x 7 Cables Required (Rated for 485 Lbs. per pair)

Springs:

Total MIP:	1287	In-Lbs
Spring IPPT:	115.1	In-Lbs / Rev
Spring Turns:	11.18	Revs
Spring Cycles:	45,000	(Max for 2 single springs)
Total Spring Qty:	2 Singles	
Spring Sizes:	0.344 x 6.00 x 40.00	
Stretched Spring:	47.00	In (Includes spring cones)
Spring Weight:	64.62	Lbs. (Includes spring cones)

Shaft:

Size / Type:	1” solid steel shaft with coupler	
Shaft Config:	Single Shaft	
Qty Shaft Brkts:	2 per door (Qty 2 per shaft)	
Shaft B Deflect:	0.173	In (bending - 0.458 " permitted)
Shaft Torsion	0.39	Deg / Ft (2.0 deg / ft permitted)
Available Shaft:	120	In
Max Span:	54	In (between supports)
Comp L Sum:	114.6	In (springs, stretch, drums, coupler, brackets, etc.)
Support Brkt Locations (off centerline):	Standard	

Rollers: Roller Load: 0.3 Lbs. per Roller (y-axis only)
Config to use 3” Steel 10 Ball Bearing Roller, load is less than 100 Lbs/Roller

Clopay® BUILDING PRODUCTS
A Griffon Company

Commercial Door
Special Approval Request
Engineering Analysis

Configuration: Menards Stock Door #6, 7, & 8, Max Cycle Springs, one shaft line,
C4SS - 9'-2" x 9'-6" + Door to clear opening by 30"

Request: Max Cycle Springs on 1 Shaft, 50K Target, Single springs preferred, duplex not preferred

Reviewed By: Mike Burns, 5/17/2011

Request Status: **APPROVED per configuration below.**

Size Review: This PAN door is within the size limitations as conveyed in ES01026

Spring Weight:

Total Door Weight:	206	Lbs.	(via Oracle)
Qty of Door Sections:	5		
Avg. Section Weight:	41	Lbs.	
Open Weight:	206	Lbs.	
Horizontal Weight:	-	Lbs.	(Value is less than maximum value of 2000 Lbs.)
Weight per Cable:	103	Lbs.	

Reinforcement: Per standard specifications

Track: 3" Full Vertical Lift

Backhang: Per standard specifications

Bottom Brkts: One pair of CCB-3-95 (Rated for 1800 lbs. per 2 cables)

Drums: Qty 2 D1100-216 Vertical Lift Drums Required

Cable: Qty 1 Pair: 1/8 x 7 x 7 Cables Required (Rated for 485 Lbs. per pair)

Springs:

Total MIP:	898	In-Lbs
Spring IPPT:	77.25	In-Lbs / Rev
Spring Turns:	11.62	Revs
Spring Cycles:	70,000	
Total Spring Qty:	2 Singles	
Spring Sizes:	0.313 x 6.00 x 37.00	
Stretched Spring:	43.94	In (Includes spring cones)
Spring Weight:	54.91	Lbs. (Includes spring cones)

Shaft:

Size / Type:	1” solid steel shaft	
Shaft Config:	Single Shaft	
Qty Shaft Brkts:	1	
Shaft B Deflect:	0.146	In (bending - 0.458 " permitted)
Shaft Torsion	0.458	Deg / Ft (2.0 deg / ft permitted)
Available Shaft:	110	In
Max Span:	55	In (between supports)
Comp L Sum:	108	In (springs, stretch, drums, coupler, brackets, etc.)

Support Brkt Locations (off centerline): Standard

Rollers: Roller Load: 0.24 Lbs. per Roller (y-axis only)
Config to use 3” Steel 10 Ball Bearing Roller, load is less than 100 Lbs/Roller

Clopay® BUILDING PRODUCTS A Griffon Company

Commercial Door
Special Approval Request
Engineering Analysis

Configuration: Menards Stock Door # Cart 2, Max Cycle Springs, one shaft line,
C2ALC - 10'-8" x 4'-6" + door to clear opening by 3"

Request: Max Cycle Springs on 1 Shaft, 50K Target, Single springs preferred

Reviewed By: Mike Burns, 5/20/2011

Request Status: **APPROVED per configuration below.**

Size Review: This ALUM door is within the size limitations as conveyed in ES01021

Spring Weight:

Total Door Weight:	150	Lbs.	(via Oracle)
Qty of Door Sections:	3		
Avg. Section Weight:	50	Lbs.	
Open Weight:	150	Lbs.	
Horizontal Weight:	-	Lbs.	(Value is less than maximum value of 2000 Lbs.)
Weight per Cable:	75	Lbs.	

Reinforcement: Per standard specifications

Track: 2" Full Vertical Lift

Backhang: Per standard specifications

Bottom Brkts: One pair of CCB-2-95 (Rated for 800 lbs. per 2 cables)

Drums: Qty 2 D850-132 Vertical Lift Drums Required

Cable: Qty 1 Pair: 1/8 x 7 x 7 Cables Required (Rated for 485 Lbs. per pair)

Springs:

Total MIP:	440	In-Lbs
Spring IPPT:	56.25	In-Lbs / Rev
Spring Turns:	7.82	Revs
Spring Cycles:	75,000	
Total Spring Qty:	2 Singles	
Spring Sizes:	0.244 x 2.00 x 41.00	
Stretched Spring:	44.87	In (Includes spring cones)
Spring Weight:	16.49	Lbs. (Includes spring cones)

Shaft:

Size / Type:	14 ga Tube	
Shaft Config:	Single Shaft	
Qty Shaft Brkts:	1	
Shaft B Deflect:	-	In
Shaft Torsion	0.26	Deg / Ft (2.0 deg / ft permitted)
Available Shaft:	128	In
Max Span:	64	In (between supports)
Comp L Sum:	96.4	In (springs, stretch, drums, coupler, brackets, etc.)

Support Brkt Locations (off centerline): Standard

Rollers: Roller Load: 0.29 Lbs. per Roller (y-axis only)
Config to use 2” Steel 10 Ball Bearing Roller, load is less than 50 Lbs/Roller

Patriot-2

Non-Contact Infrared Sensing Edge

Applications

- ***Rolling Steel Doors***
- ***Sectional Doors***

The **D-I-Y** Sensing Edge System

This Do-It-Yourself Sensing Edge System is designed to provide a Non-Contact safe-guarding solution for motorized overhead doors.

The system includes a light emitting eye and a receiving eye which easily mount to and travel with the leading edge of the door. When the infrared beam becomes blocked by an obstruction, the operator is sent a signal to stop and reverse the motion of the door.

The Patriot system incorporates self-monitored circuitry so that a loss of power, short, or blocked IR signal will signal the motor to stop and/or reverse to an open position.

OPTIONS:

- MIRF-Z2: 30 ft max. range; fail-safe
- MIRF-Z2-50: 50 ft max. range; fail-safe
- MIRM-Z2: 30 ft max range; monitored
- MIRM-Z2-50: 50 ft max range; monitored

TECHNICAL SPECIFICATIONS:

Dimensions: PE Housings	2.75 in L x 2.00 in W x 1.25 in H (7.0cm L x 5.1cm W x 3.2cm H)
Ratings	NEMA 4, Class 2, IP65
PE Housing Material	PVC
Detection Technology	Infrared Thru-beam
Wavelength	940nm
Response Time	<20msec
Alignment Angle	±10°
Alignment Indicator	LED
Operating Temperature	-40°F to 185°F -40°C to 85°C

FUNCTIONAL BENEFITS

- Meets current UL325 standards for commercial door and gate operators*
- Thru Beam technology minimizes false reflective signals
- Travels with the door
- Easy to Align
- No need to stock special sizes - works up to 30 feet wide or, up to 50 ft wide
- Convenient - Assemble and install in the field
- NEMA4 enclosure provides added protection from water spray, dirt and dust
- Self Monitoring circuitry
- On Board diagnostic assist with troubleshooting

* Applies to select models only when used as a primary entrapment protection device with a UL325-2010 Listed CDO

Do-It-Yourself Sensing Solutions by MillerEdge Inc.

P.O. Box 159 • West Grove, PA 19390 • (610)869-4422 • Fax: (610)869-4423 • 800-220-3343
6809 South Harl Avenue, Suite A, Tempe, AZ 85283 • (480)755-3565 • Fax (480)755-3558 • 800-887-3343
www.milleredge.com

MillerEdge

TECHNICAL SPECIFICATIONS:

	MIRF-Z2 *Fail-Safe includes Controller* *30 Foot Range*	**MIRF-Z2-50** *Fail-Safe includes Controller* *50 Foot Range*	**MIRM-Z2** *Monitored* *30 Foot Range*	**MIRM-Z2-50** *Monitored* *50 Foot Range*
Maximum Range	30 ft 9.1m	50ft 15.2 m	30 ft 9.1m	50ft 15.2 m
Power Supply	8-30 VAC / 12-42 VDC	8-30 VAC / 12-42 VDC	Monitored PE terminal	Monitored PE terminals
Relay Rating	10A@120VAC / 8A@30VDC	10A@120VAC / 8A@30VDC	---	---
Certification	---	---	UL325 - 2010, UL991	UL325 - 2010, UL991
Controller Dimensions	1.75 in. x 4.62 in. x 1.75 in. 4.4 cm x 11.7 cm x 4.4 cm	1.75 in. x 4.62 in. x 1.75 in. 4.4 cm x 11.7 cm x 4.4 cm	---	---
Rating	NEMA 4, Class 2, IP65	NEMA 4, Class 2, IP65	---	---
Current Consumption	Relay Energized 36mA@24VAC Relay De-Energized 15mA@24VAC	Relay Energized 36mA@24VAC Relay De-Energized 15mA@24VAC		

WARRANTY

We will replace within two years of shipment from our factory, any Patriot subject to normal use which is found to have defective materials or workmanship, as determined solely by our factory representative. Replacements will be shipped to you freight collect. This warranty is void where evidence of misuse or abuse is present.

P.O. Box 159 • West Grove, PA 19390 • (610)869-4422 • Fax: (610)869-4423 • 800-220-3343
6809 South Harl Avenue, Suite A, Tempe, AZ 85283 • (480)755-3565 • Fax (480)755-3558 • 800-887-3343
www.milleredge.com

INSTALLATION INSTRUCTIONS

Model # MIRM-Z2 30/50Ft.

US PAT.# 6,920,717 6,651,385
CAN PAT.# 2,434,531

Patriot 2 *Non-Contact Monitored Z-Flap Edge Sensor*

IMPORTANT:
READ AND UNDERSTAND ALL INSTRUCTIONS BEFORE BEGINNING INSTALLATION.

The Patriot 2 edge sensor is designed to transmit an infrared light beam from an emitter to a receiver housed below the bottom edge of the door.The emitting and receiving "eyes" slide into the Z-Flaps. If the beam is interrupted by an object or person below the door, signals are sent to the door operator to stop and/or reverse the door.

1- Kit Contents

MIRM-Z2 (30 Feet)

(1) Installation Instructions	
(1) MIRM-E2	PE MONOTORED EMITTER EXT. 30
(1) MIRM-R2	PE MONITORED RECEIVER
(1) MIR-Z2-ZK	PE PATRIOT 2 Z-FLAP HOLDER KIT
(1) C222-15B	15FT. COIL CORD
(1) JB-02-Z	JUNCTION BOX WITH COVER

MIRM-Z2-50 (50 Feet)

(1) Installation Instructions	
(1) MIRM-E2-50	PE MONITORED EMITTER EXT. 50
(1) MIRM-R2	PE MONITORED RECEIVER
(1) MIR-Z2-ZK	PE PATRIOT 2 Z-FLAP HOLDER KIT
(1) C222-15B	15FT. COIL CORD
(1) JB-02-Z	JUNCTION BOX WITH COVER

2 - Mounting

1. Move the door to a comfortable working height.
2. Disconnect ALL Power to the operator.
3. Insert Z-FLAPS into the groove of each holder then install between the bottom bar of the door at each end. ***(See Diagram #1).***
4. Insert Receiver Eye (shorter wire) into the Z-FLAP mounted closer to the operator side of the door and the Emitter Eye (longer wire) on the opposite side.
5. Install supplied junction box horizontally on the bottom bar on the operator side of the door within reach of the Receiver Eye. ***(See Diagram #2).***
6. Route Emitter photo-eye wire along door to junction box affixing to the bottom bar using supplied clips and wire ties. Cut wire to suitable length, and do the same for receiving photo-eye wire.
7. Install Junction Box on the wall half way up the height of the door on the operator side as shown in Diagram #2 in conjunction with all Federal, State and Local codes.
8. For wiring guide refer to Section #3.

Diagram #1
Photo-Eye Mounted in Z-Flap

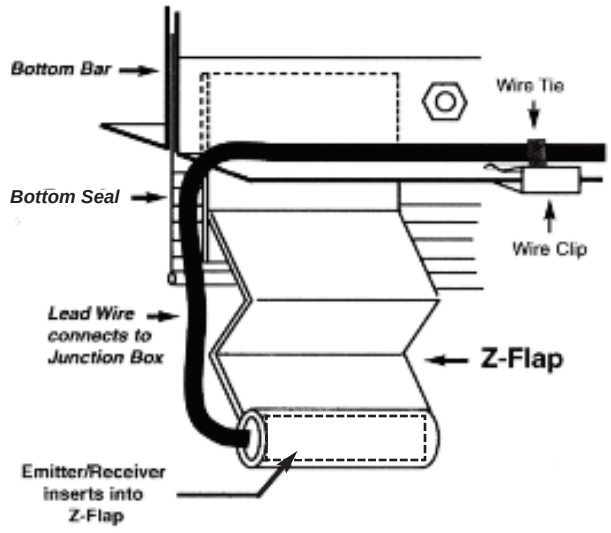

Diagram #2
Photo-Eye / Door Assembly Configuration
with Junction Box

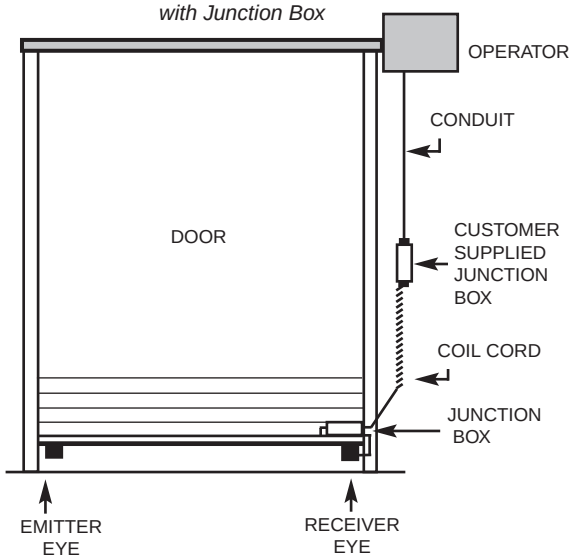

P.O. Box 159 • West Grove, PA 19390 • 800-220-3343 • 610-869-4422 • Fax: 610-869-4423 • www.milleredge.com
6809 South Harl Ave., Suite A • Tempe, AZ 85283 • 800-887-3343 • 480-755-3565 • Fax: 480-755-3558

3- Wiring Connections

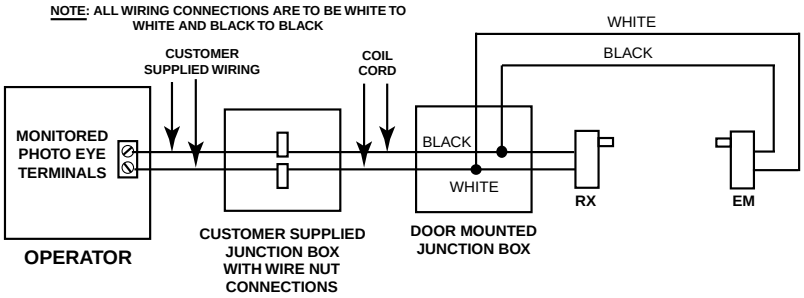

4- Technical Specifications

Detection Technology	Infrared Thru-Beam
Infrared Wavelenght	940nm
Infrared Beam Range	30/50 feet
Response Time	<20msec
Alignment Angle	± 10
Operating Temperature	-40ºF to 185ºF (-40º C to 85º C)
Power Supply	Monitored Photo Eye Terminal
Current Consumption	30mA
Cable Length	Rx: 3 Ft. Em Ext: 32/52 Ft.
Mounting Method	Z-Flap
Enclosure Material	PVC
PE Housing	3 1/4"H x 1 1/2"W x 2 1/4"L
Rating	NEMA 4 Class 2
Certification	UL325

5- Trouble Shooting Tips

Emitter Indicators

LED COLOR	OK STATUS	FAULT	SOLUTION
GREEN	ON = NORMAL OPERATION	OFF = NO POWER	CHECK WIRING

Receiver Indicators

LED COLOR	OK STATUS	FAULT	SOLUTION
GREEN	ON = NORMAL OPERATION	OFF = NO POWER BROKEN BEAM	CHECK ALIGNMENT CHECK FOR OBSTRUCTION
RED	OFF= NORMAL OPERATION	ON = OBSTRUCTION	REMOVE OBSTRUCTION

6- Warranty

We will replace within two years of shipment from our factory, any Patriot 2 subject to normal use which is found to have defective materials or workmanship, as determined solely by our factory representative. Replacements will be shipped via freight collect. This warranty is void where evidence of misuse or abuse is present.

P.O. Box 159 • West Grove, PA 19390 • 800-220-3343 • 610-869-4422 • Fax: 610-869-4423 • www.milleredge.com
6809 South Harl Ave., Suite A • Tempe, AZ 85283 • 800-887-3343 • 480-755-3565 • Fax: 480-755-3558

HEAVY DUTY ROLL UP DOOR

installation guide

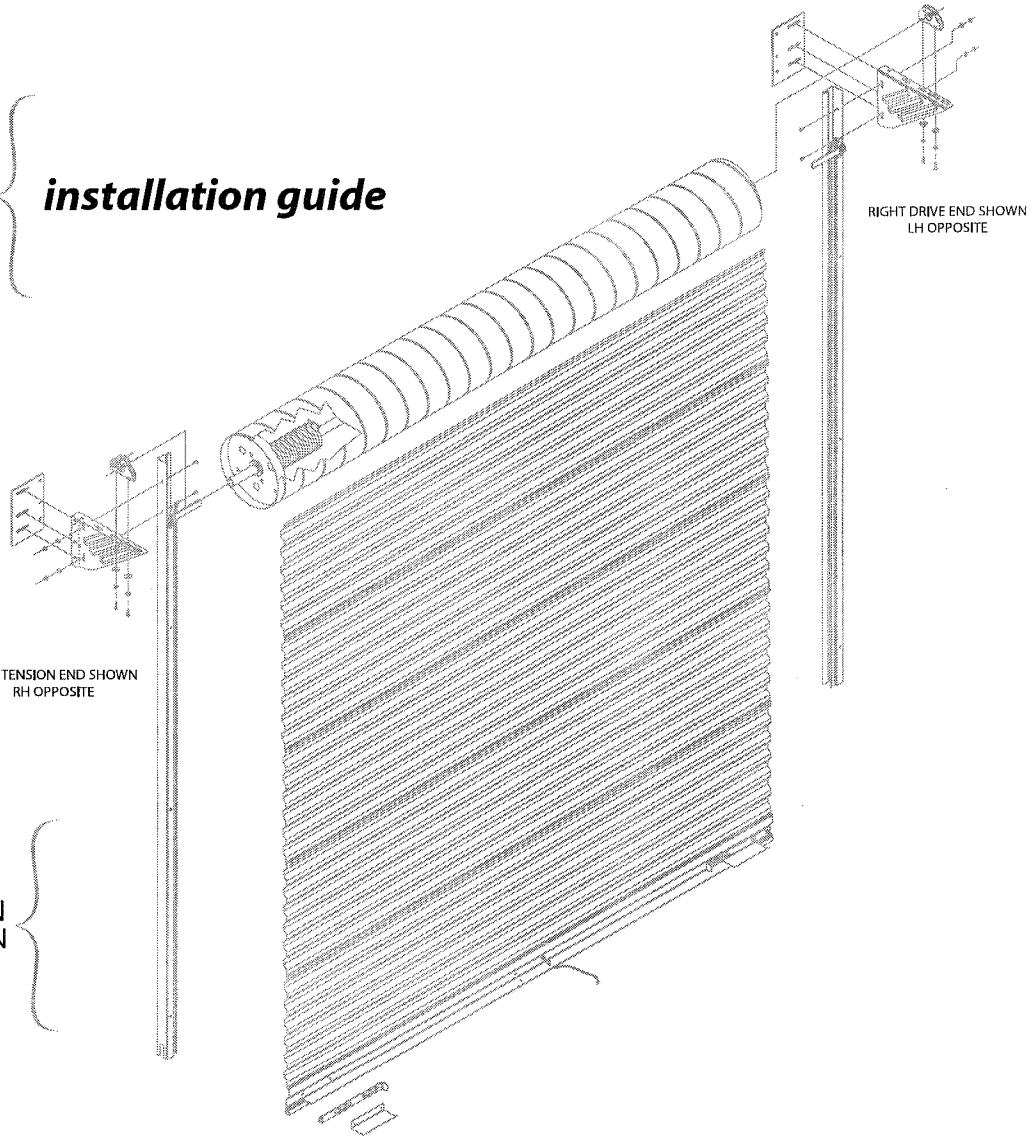

PUSH-UP OPERATION SHOWN

⚠ WARNING!

A rolling door is a large heavy object that moves with the help of springs under extreme tension and electric motors. Moving objects, springs under tension and electric motors can cause serious injuries or death. For your safety and the safety of others, follow these instructions.

⚠ CAUTION

Use proper lifting equipment and correct lifting procedures to avoid damage or injury.

POTENTIAL HAZARD	EFFECT	PREVENTION
MOVING DOOR	CAN CAUSE SERIOUS INJURY OR DEATH	**DO NOT** stand or walk under moving door. Keep door in full view and free of obstructions while operating. **DO NOT** allow children to operate the door or door controls.
ELECTRIC SHOCK	CAN CAUSE SERIOUS BURNS OR DEATH	Turn off electrical power before removing operator cover. Operator must be electrically grounded.
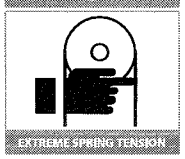 EXTREME SPRING TENSION	CAN CAUSE SERIOUS INJURY OR DEATH	Installation, repairs and adjustments must be made by a trained rolling service door systems technician using proper tools and instructions. **DOOR MUST BE FULLY OPENED WHEN MAKING ADJUSTMENTS.**

IMPORTANT NOTE:

Do not cut tape and plastic wrap that holds the door in a roll until you are directed to do so in step 14B.
Clopay Building Products Corporation and its affiliates cannot guarantee or accept responsibility for doors that are not installed as directed. Please read and understand all instructions before beginning the installation process.

CLEARANCE CHARTS FIGURE 1

SIDE ROOM REQUIREMENTS

* All dimensions are taken from edge of opening

OPERATION	BACK OF GUIDE	OUTSIDE OF BRACKET TENSIONER END	OUTSIDE OF BRACKET DRIVE END (NON-TENSIONER)	OUTSIDE OF HAND CHAIN DRIVE	EACH END OF AXLE
Push-up	4"	5-5/8"	5-5/8"	.....	8-1/2"
Reduced Hand Chain	4"	5-5/8"	6-3/8"	7-7/8"	8-1/2"
Electric	4"	5-5/8"	7-1/8"	.....	8-1/2"

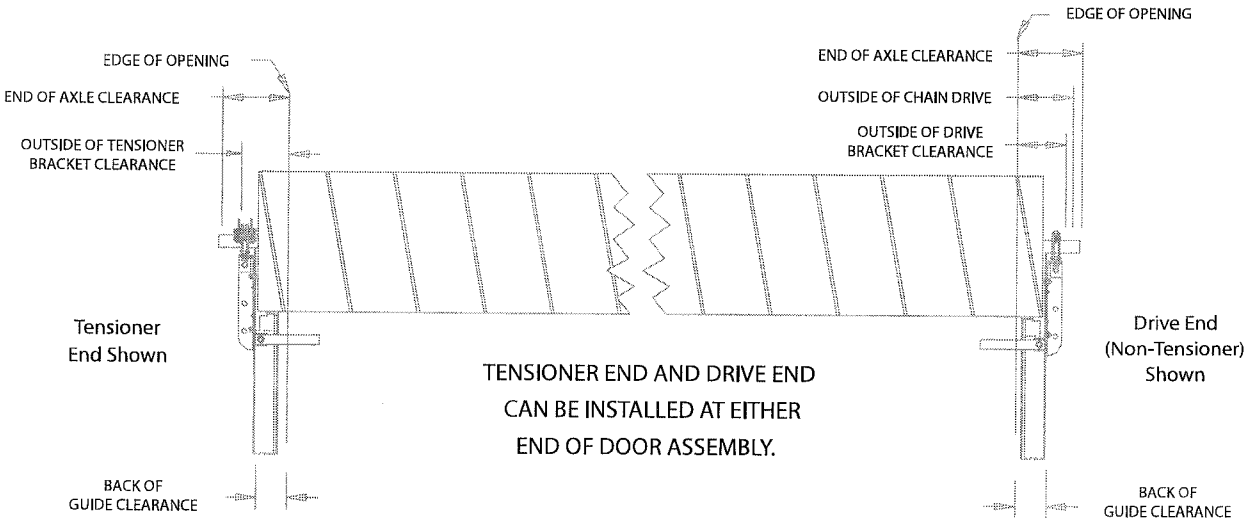

TENSIONER END AND DRIVE END CAN BE INSTALLED AT EITHER END OF DOOR ASSEMBLY.

HEADROOM REQUIREMENTS

OPENING HEIGHT	VERTICAL HEADROOM	HORIZONTAL HEADROOM
THRU 8'-0"	17"	19"
OVER 8'-0" THRU 10'-0"	19"	21"
OVER 10'-0" THRU 14'-0"	20"	22"
OVER 14'-0" THRU 16'-0"	21"	23"
OVER 16'-0" THRU 18'-0"	22"	24"
OVER 18'-0" THRU 20'-0"	23"	25"

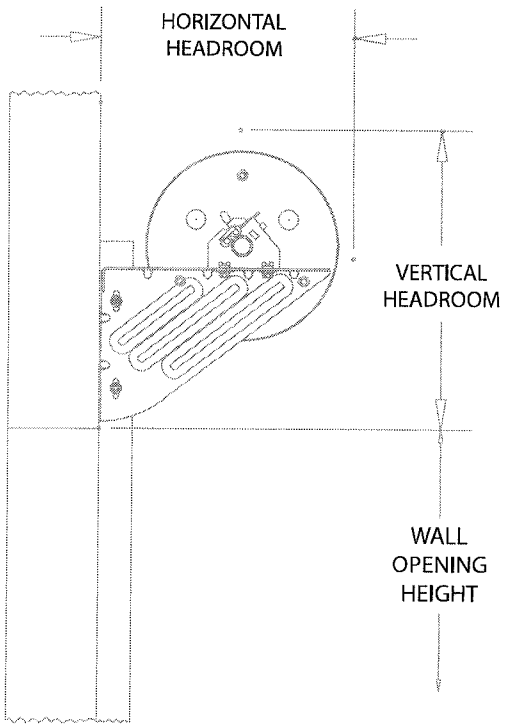

STEP 1: WALL OPENING

A. Check wall opening width and height and verify these measurements against size of door to be installed.
B. Verify that jambs are plumb.
C. Check floor and header for level.
D. Check for adequate side clearance at jambs and clearance above and at sides of header. Check vertical and horizontal headroom requirements. See Clearance charts ***figure 1*** for minimum requirements.
E. Verify that the guide mounting surface on the jamb is flush.
F. Make sure all parts required for installation are with the door.

STEP 2: MOUNTING PLATES (OPTIONAL EXCEPT FOR STEEL JAMBS)

A. If door will install to steel jambs, mounting plates for the door brackets are required and may be welded or bolted to the jambs.
B. Top of mounting plates should be located 10" above top of opening and be level with each other. Side of mounting plates should be even with edge of opening. If opening width is off, adjust locations accordingly. **See figure 2.**

NOTE: DOOR DRIVE OPERATION MAY BE INSTALLED ON EITHER END OF DOOR ASSEMBLY.

STEP 3: BRACKETS TO GUIDES

A. Attach door brackets to guides, locating top surface of bracket 2" below top of guide. Use 2 each 1/4-20 x 5/8" carriage bolts, 1/4-20 serrated flange hex nuts and 1/4" flat washers per bracket for tensioner end and the non-tensioner (drive) end for push-up operation. ***See figures 6 and 7.***
B. For reduced hand chain drive end, install drive bracket with 2 each 1/4-20 x 1-3/4" carriage bolts, 1/4-20 serrated flange hex nuts and 1/4" flat washers. Insert 1 each 1-1/4" O.D. x 3/4" long spacer tube between guide and bracket at each bolt location. ***See figure 8.***
C. For electric operation drive end, install drive bracket with 2 each 1/4-20 x 2-1/2" carriage bolts, 1/4-20 serrated flange hex nuts and 1/4" flat washers. Insert 2 each 1-1/4" O.D. x 3/4" long spacer tubes between guide and bracket at each bolt location. ***See figure 9.***

STEP 4: GUIDES AND BRACKETS TO JAMB

A. Attach brackets and guides to jambs using fasteners shown in ***table 1.***
B. The guides should be mounted centered about the opening and spaced curtain width + 1" apart, measured from back of guide to back of guide. ***See figure 3.*** Both guides must be plumb.
C. Once both guides have been correctly positioned, attach them to the jambs using the appropriate fastener at each hole location. ***See table 1.***
D. Check top surface of brackets to verify they are level with each other. If they are not, loosen the bracket-to-guide attachment fasteners and slide bracket(s) vertically until level. Tighten bracket to guide fasteners.
E. Install 3 bracket-to-jamb attachment fasteners for each bracket. ***See table 1.***

⚠ WARNING!
DOOR CAN FALL IF BOTH BRACKETS ARE NOT SECURELY FASTENED TO THE JAMBS. ALL FASTENERS ATTACHING BRACKETS TO JAMBS MUST FIT SECURELY INTO A STRUCTURAL MEMBER OR SURFACE. IF DOOR FALLS, SERIOUS INJURY OR DEATH AND/OR DAMAGE TO DOOR CAN RESULT.

TABLE 1: Wall Fasteners included for jamb attachment of Brackets and Guides.

ITEM	JAMB	FASTENERS	DRILL SIZE
Brackets	Steel	3/8-16 x 1-1/4" Hex Bolt and Nut	7/16"
	Concrete or Filled Block	3/8" x 1-3/4" Powers Wedge-Bolt	Powers 01316
	Wood	3/8-7 x 3" Lag Screw	None
Guides	Steel	1/4" x 14 x1" TEKS Screw	None
	Concrete or Filled Block	1/4" x 1-3/4" Powers Wedge-Bolt	Powers 01314
	Wood	1/4 -10 x 1" Lag Screw	None

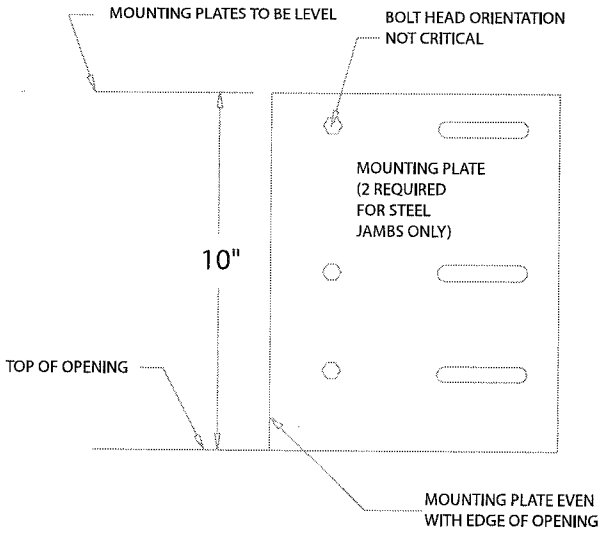

FIGURE 2
MOUNTING PLATE INSTALLATION

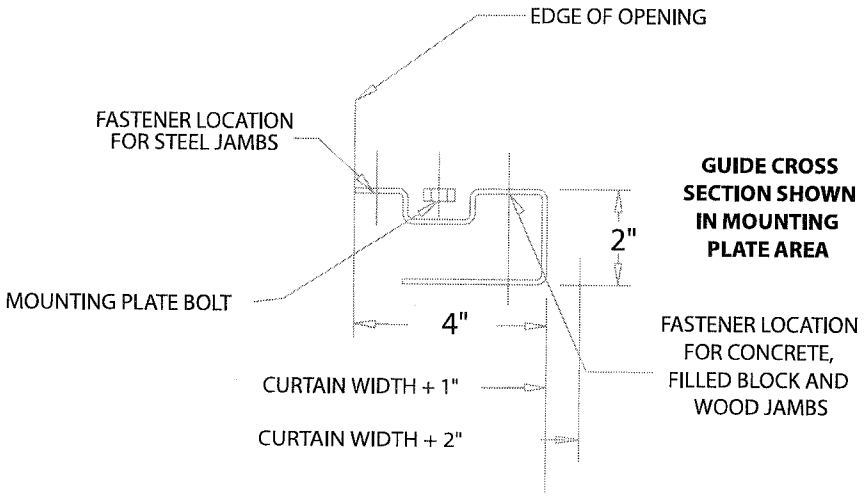

FIGURE 3
GUIDE INSTALLATION

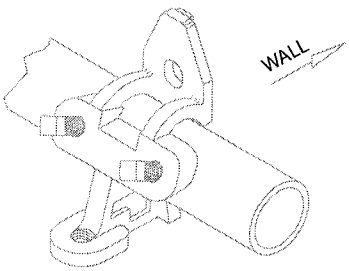

CAST AXLE SUPPORT BRACKET - 1-5/16"
HAND CHAIN OPERATION
ONE EACH PER DOOR

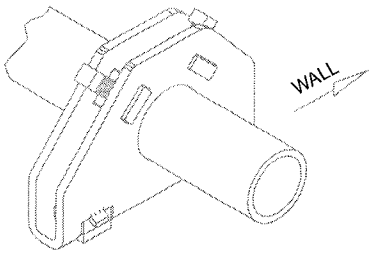

STAMPED AXLE SUPPORT - 1-5/16"
PUSH-UP & ELECTRIC OPERATION
ONE EACH PER DOOR

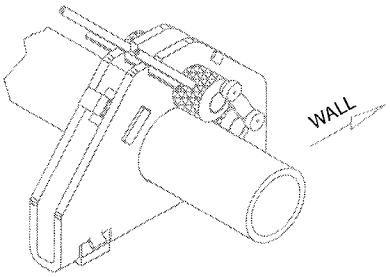

TENSIONER ASSEMBLY - 1-5/16"
ONE EACH PER DOOR

FIGURE 4
TENSIONER END

STEP 5: TENSIONER END

A. Using tensioner assembly's spring roll pin located in knurled wheel, rotate upward in the direction that clears the axle.
B. Slide tensioner assembly over axle, with arrow pointing toward wall. Release pin. ***See figures 4 and 6.***

⚠ WARNING!

TENSIONER ASSEMBLY MUST BE ORIENTED ON AXLE WITH THE ARROW POINTING TOWARD THE WALL. IF THIS IS NOT DONE, IT WILL NOT OPERATE AS DESIGNED, WHICH MAY CAUSE SERIOUS INJURY OR DEATH DUE TO THE DOOR SUDDENLY LOSING SPRING TENSION AND RAPIDLY MOVING DOWNWARD.

STEP 6: PUSH-UP NON-TENSIONER END

A. Slide stamped axle support over axle, with arrow pointing toward wall. ***See figures 4 and 7.***

STEP 7: REDUCED CHAIN DRIVE END

A. Fasten 63 tooth cast ring gear to drum using 3 each 3/8-16 x 1-1/2" grade 5 hex bolts and 3/8" lock washers.
B. Install 2 each 3/8-16 x 1" square head setscrews in the threaded holes in the cast axle support bracket. These will be tightened against the axle later.
C. Slide cast axle support bracket over axle. ***See figures 4 and 8.***

STEP 8: ELECTRIC DRIVE END

A. Locate 3 each 1" O.D. x 2-3/8" long spacer tubes and 9" long x 2-5/8" offset struts between 72 tooth #41 sprocket and drum.
B. Attach sprocket with 3 each 3/8-16 x 3-1/2" grade 5 hex bolts and 3/8" lock washers.
C. Slide stamped axle support over axle, with arrow pointing toward wall. ***See figures 4 and 9.***

STEP 9: LIFTING DOOR ASSEMBLY

A. Orient door with bottom bar located at 12 o'clock position.
B. Lift door assembly using a forklift that has padded forks in order to prevent damage to curtain.
C. Position door on brackets with tensioner and axle support resting safely on top of bracket flange.
D. Door should be positioned as close as possible to the header and still be able to rotate and clear bottom bar.
E. Each end of door should be equal distance from the header and the curtain must be centered in the opening.

⚠ WARNING!

DO NOT ALLOW DOOR ASSEMBLY TO ROLL OFF BRACKETS OR MOVE SIDEWAYS OFF EDGE OF BRACKET. IF DOOR FALLS, SERIOUS INJURY OR DEATH AND/OR DAMAGE TO DOOR CAN RESULT.

STEP 10: TENSIONER END

A. Attach tensioner assembly to door bracket using 2 each 3/8-16 x 3/4" grade 5 hex bolts, 3/8" lock washers and 3/8" flat washers. ***See figures 4 and 6.***

STEP 11: PUSH-UP NON-TENSIONER END

A. Attach stamped axle support to door bracket using 2 each 3/8-16 x 3/4" grade 5 hex bolts, 3/8" lock washers and 3/8" flat washers. ***See figures 4 and 7.***

STEP 12: REDUCED HAND CHAIN DRIVE END

A. Attach cast axle support bracket to door bracket using 3/8-16 x 3/4" grade 5 hex bolt, 3/8" lock washer and 3/8" flat washer.
B. Position chain hoist assembly on door bracket next to cast axle support and attach to door bracket using 2 each 3/8-16 x 3/4" grade 5 hex bolts, 3/8" lock washers and 3/8" flat washers. The spur gear on the hoist will engage with the external teeth of the cast ring gear on the end of the drum. ***See figure 8.***
C. Connect cast axle support bracket to side of chain hoist using 3/8-16 x 3/4" hex bolt and 3/8" lock washer. ***See figures 4 and 8.***
D. Feed hand chain over chain pocket wheel and through hoist. Connect ends of hand chain, being careful not to twist chain. Hand chain may be lengthened or shortened as necessary.
E. Install hand chain keeper on wall or jamb.

STEP 13: ELECTRIC DRIVE END

A. Attach stamped axle support to door bracket using 2 each 3/8-16 x 3/4" grade 5 hex bolts, 3/8" lock washers and 3/8" flat washers. ***See figures 4 and 9.***

STEP 14: SETTING INITIAL SPRING TENSION

⚠ WARNING!

EXTREME SPRING TENSION CAN CAUSE SERIOUS INJURY OR DEATH. INSTALLATION, REPAIRS AND ADJUSTMENTS MUST BE MADE BY A TRAINED ROLLING SERVICE DOOR SYSTEMS TECHNICIAN USING PROPER TOOLS AND INSTRUCTIONS. DOOR MUST BE FULLY OPEN WHEN MAKING ADJUSTMENTS.

A. Rotate door 1-1/2 revolutions in the direction that would send the bottom bar down through the guides.
B. While firmly holding the door at the bottom bar, cut the tape and plastic wrap that holds the door in a coil. Direct the bottom bar down into the guides, stopping just past the head stop area.

STEP 15: HEAD STOPS

A. Slide head stop from outside of each guide. ***See figures 6 through 9.***
B. Secure each head stop to guide with a 3/8-16 x 1/2" hex bolt and a 3/8" lock washer.

STEP 16: SLIDE LOCK, STEP PLATE AND PULL ROPE

A. Lower bottom bar and install slide lock and step plate using 2 each 1/4-20 x 1" hex bolts, 5/16-18 hex nuts, 1/4" flat washers and 1/4-20 nylon insert hex nuts. Do this at both ends of bottom bar. **See figure 5.**
B. Transfer the 1/4-20 x 1/2" carriage bolts and 1/4-20 serrated flange hex nuts that were removed from both ends of the bottom bar to the 2 holes at the center of the bottom bar and angle.
C. For push-up operation only, install rope in one of the holes at the center of the horizontal leg of the bottom bar angle.

STEP 17: POSITION DOOR

A. Fully open door.
B. At both ends of the door, slightly loosen all 3/8-16 x 3/4" hex bolts that go through the door bracket and connect to the tensioner, axle support and chain hoist.
C. Push door assembly as close as possible toward header and still be able to rotate freely. Each end of door should be equal distance from the header and the curtain must be centered in the opening.
D. Tighten securely all 3/8-16 x 3/4" hex bolts that were loosened in step 17B.
E. Tighten all 3/8-16 square head setscrews in tensioner and axle support at both ends of door.

STEP 18: CHECK DOOR OPERATION

A. Lower and raise the door to test door operation and balance.
B. If door is easy to close, but hard to open, increase spring initial tension.
C. If door is hard to close, but easy to open, decrease spring initial tension.

⚠ WARNING!

DOOR MUST BE FULLY OPENED WHEN MAKING ADJUSTMENTS.

STEP 19: ADJUST SPRING TENSION (if required)

A. Loosen all 3/8-16 square head setscrews in tensioner and axle support at both ends of door.
B. At tensioner end, place pipe wrench around end of axle so that pulling down on the handle will rotate the axle to increase spring tension.
C. To increase spring tension, pull down on pipe wrench. The tensioner will automatically grip the axle and hold the new tension setting.
D. To decrease spring tension, momentarily pull down on pipe wrench and then lift the spring roll pin on the tensioner's knurled wheel. Gently let up on pipe wrench, allowing the axle to rotate to reduce the tension. While holding the new tension, release the tensioner's spring roll pin. The tensioner will now grip the axle and hold the new tension setting.
E. Tighten all 3/8-16 square head setscrews in tensioner and axle support at both ends of door.
F. Remove pipe wrench and operate door.
G. Repeat steps 19A through 19F as necessary.

STEP 20: WARNING LABEL

A. Install warning label at a readable height on the drive side door guide or jamb.

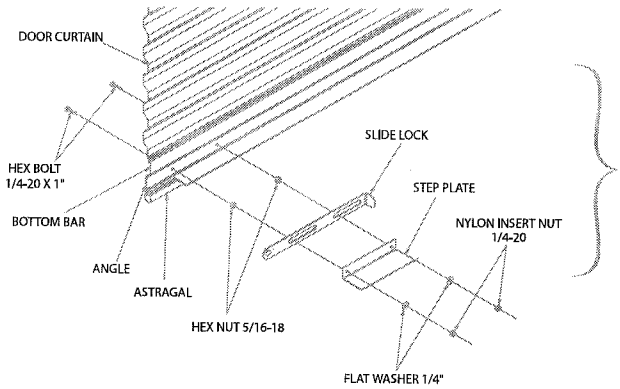

BOTTOM BAR ASSEMBLY
FIGURE 5

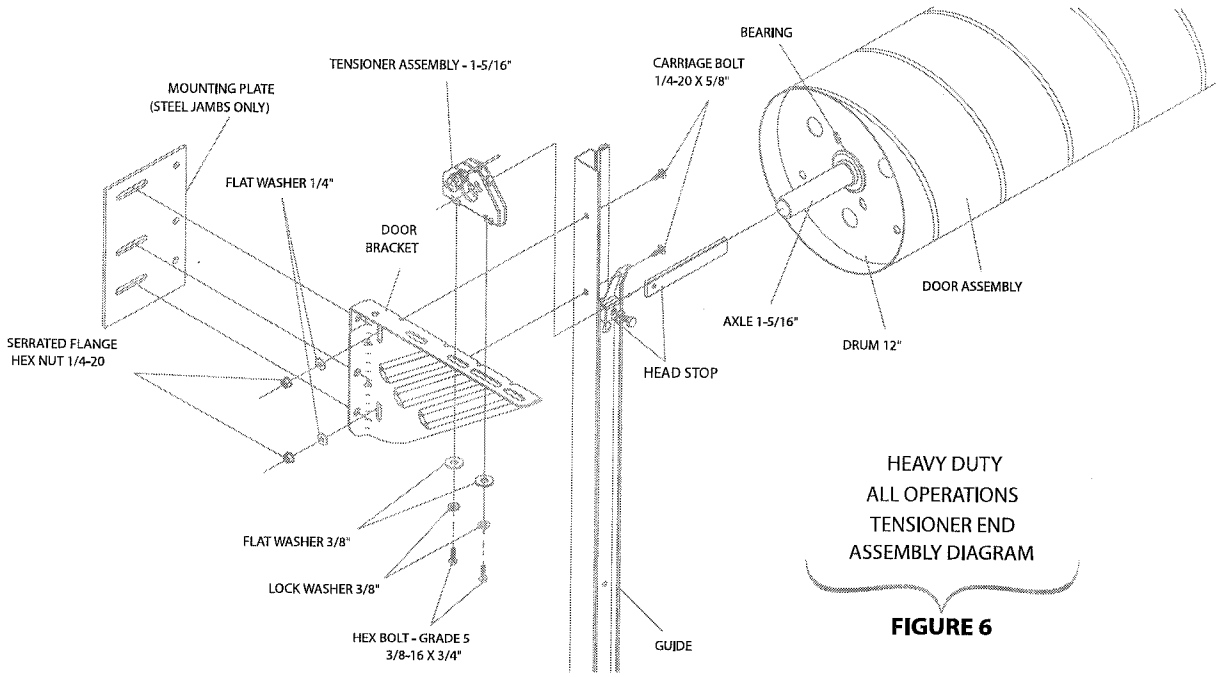

HEAVY DUTY
ALL OPERATIONS
TENSIONER END
ASSEMBLY DIAGRAM

FIGURE 6

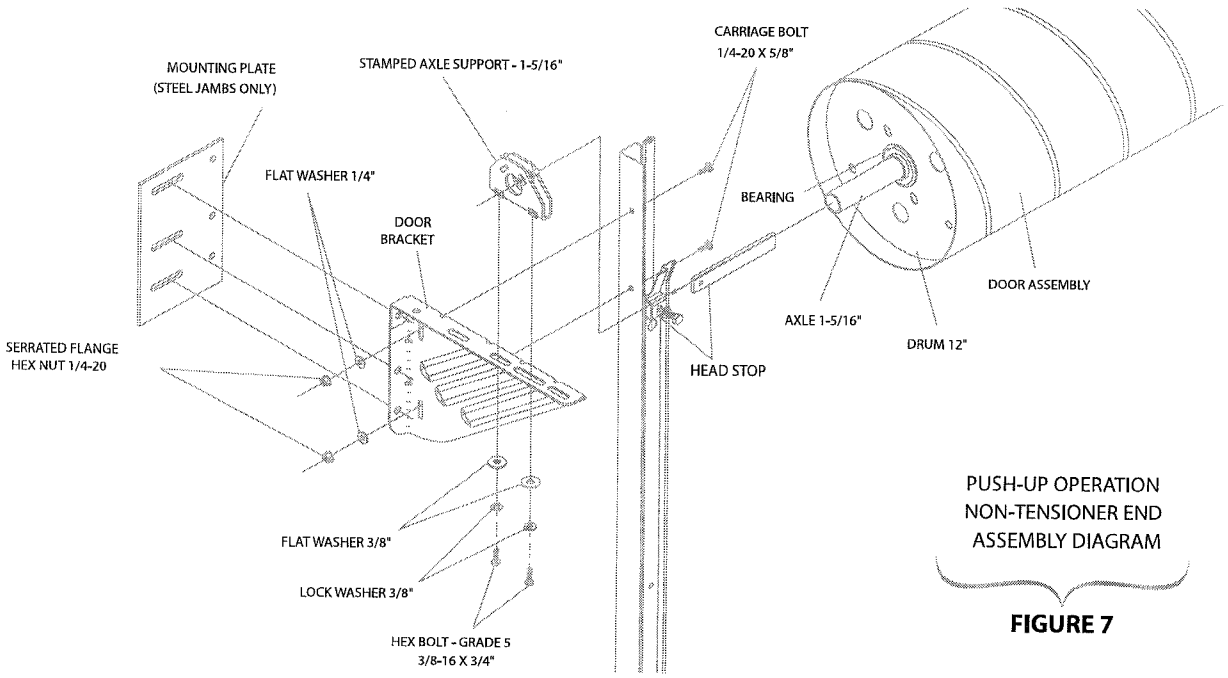

PUSH-UP OPERATION
NON-TENSIONER END
ASSEMBLY DIAGRAM

FIGURE 7

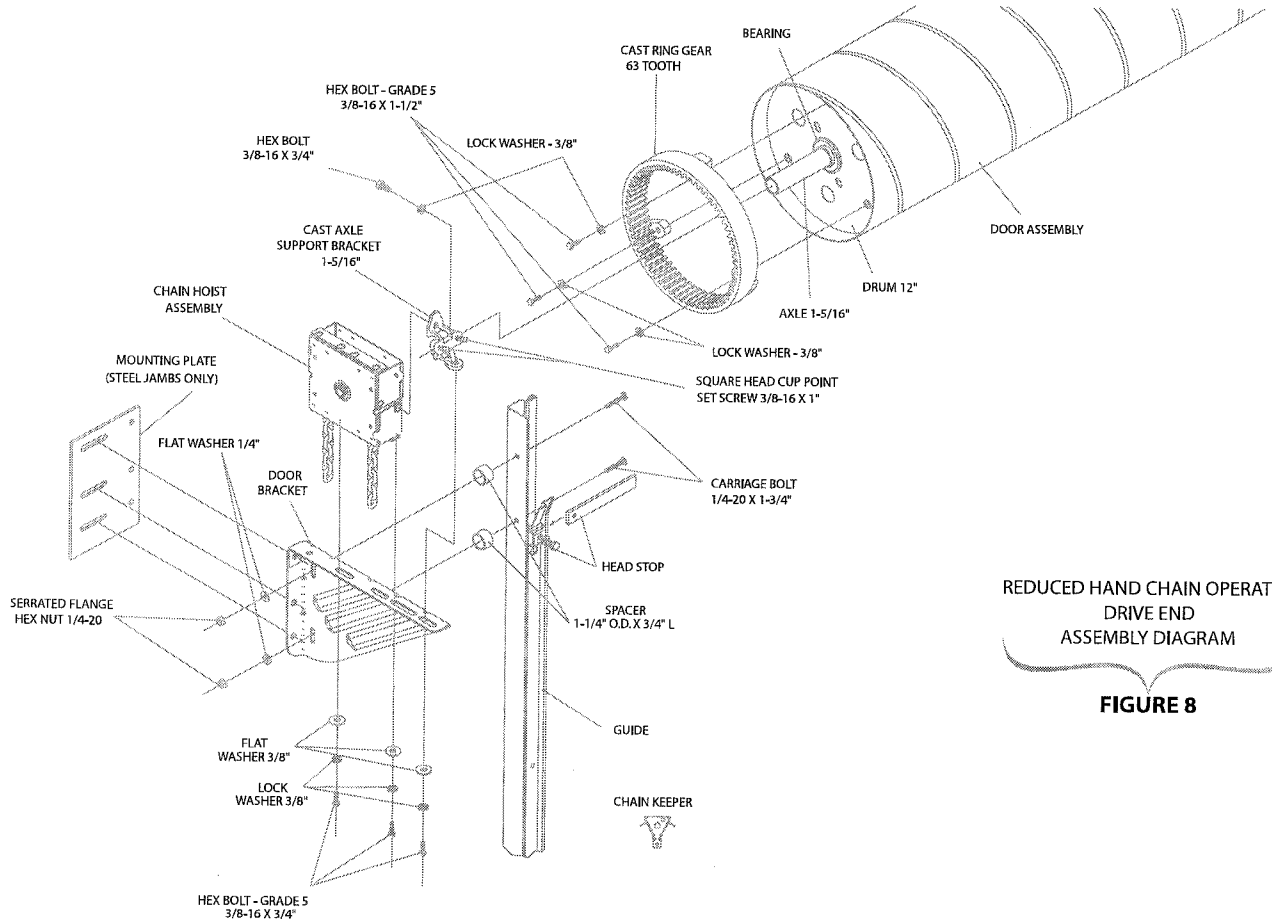

REDUCED HAND CHAIN OPERATION
DRIVE END
ASSEMBLY DIAGRAM

FIGURE 8

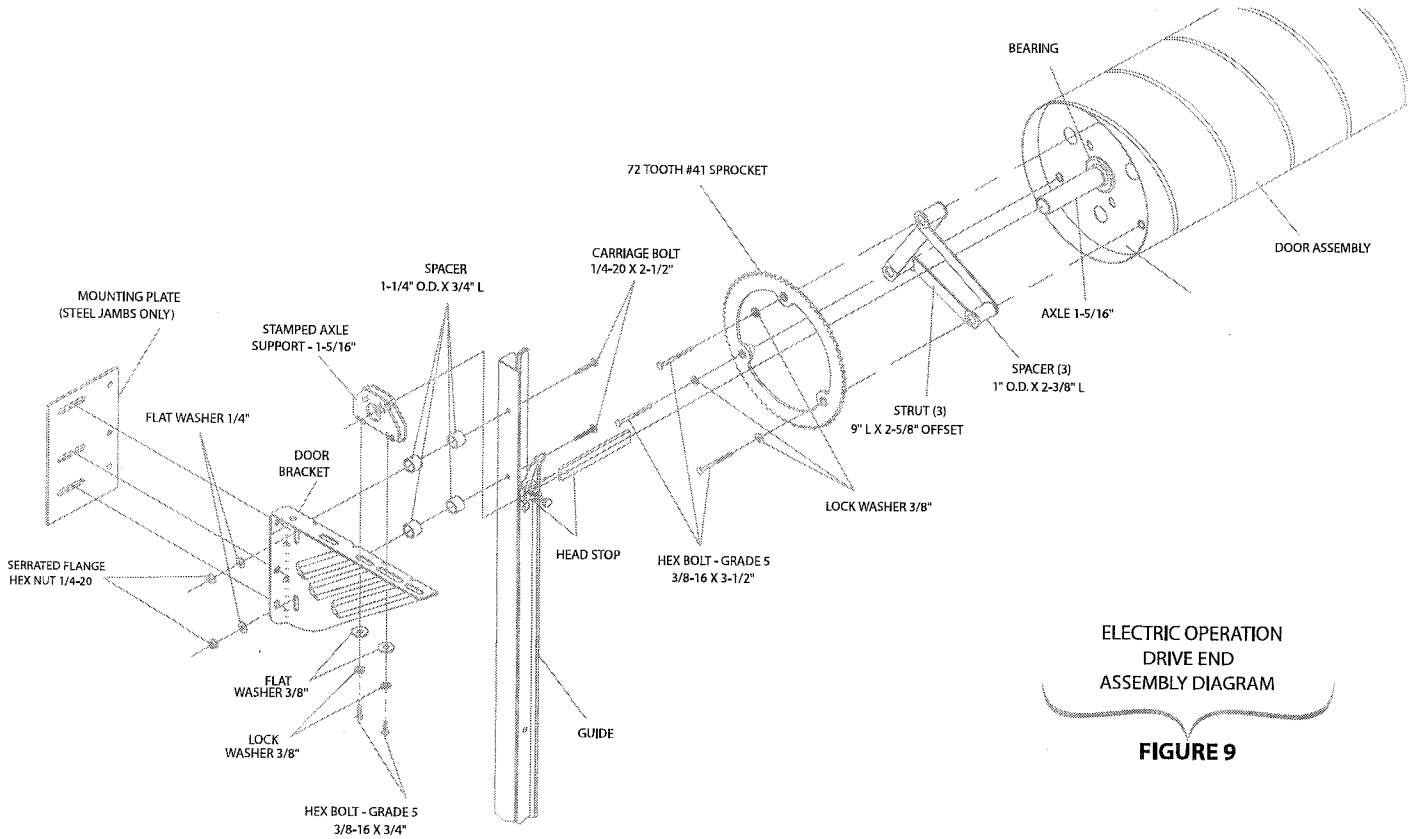

ELECTRIC OPERATION
DRIVE END
ASSEMBLY DIAGRAM

FIGURE 9

SUNOPTICS®
High Performance Prismatic Daylighting

Prismatic Acrylic Technical Information

I. Safety and Impact Resistance

Due to its superior qualities of durability, shatter- resistance, and low smoke density rating, acrylic sheet meets or exceeds the glazing standards (for combustible light transmitting materials) established by the following organizations:

1) **ANSI** - American National Standard Institute
2) **ICBO** - International Conference of Building Officials
3) **CPSC** - Consumer Product Safety Commission
4) **SBCC** - Southern Building Code Congress International, Inc.
5) **BOCA** - Building Officials and Code Administration International

II. Specific Technical Information

	Specific Data	Source	Reading
1	Specific Gravity	D-792	1.15 to 1.19
2	Non prismatic light transmission	D-1003	92%
3	Prismatic light transmission	-	78%
4	Water absorption	D-570	.40% by weight
5	Tensile strength	D-638	9,800 pounds per sq. inch
6	Flexural strength	D-790	17,000 pounds per sq. inch
7	Izod molded notch @ 23 degrees C	D-256	.4 Foot pounds/inch of notch
8	Rockwell Hardness (.236" thick)	D-785	M-95
9	Deflection temp. under load (264psi)	D-648	203 degrees F
10	Self ignition temp.	D-1929	393 C / 739 F
11	Flammability (.236 thick)	D-635	.319 inches per minute
12	UL Flammability Rating	-	UL 94HB
13	Melting point	MSDS	132 C / 270 F min. pour pt.
14	Heat coefficient	-	203 degrees F

III. Conclusion

We believe all information contained herein to be reliable. We offer this in good faith but without guarantee or representation for which we assume legal liability. We recommend that the prospective purchaser determine the suitability of our material for their own intended purposes. No warranty of fitness for a particular purpose is made

Double Glazed

Signature Series Dome

Fixed Industrial Skylight with Insulated Thermal Break and (Optional) Safety Security Guard

Signature Dome

Frame Model 800MD
Section 08620

Available Frame Finish
Natural Mill (Aluminum)

Details Not to Scale

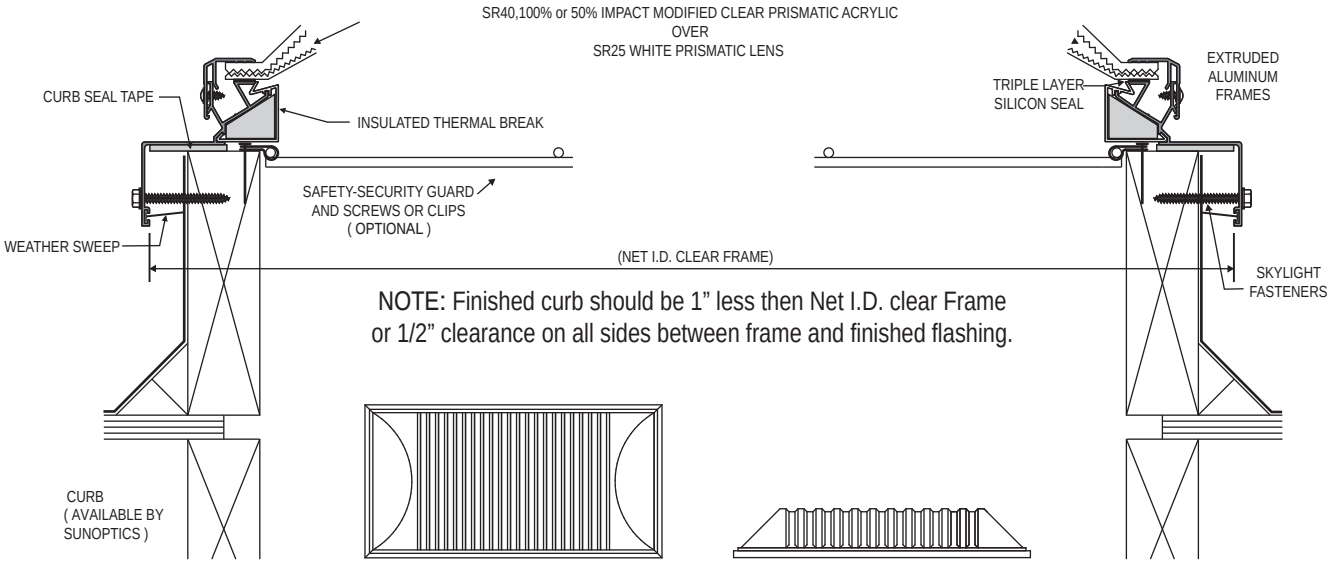

Standard Sizes

Call-Out Size	Net I.D. Clear Frame	Call-Out Size	Net I.D. Clear Frame
2020	27 1/4" x 27 1/4"	4050	51 1/4" x 63 1/4"
2040	27 1/4" x 51 1/4"	4060	51 1/4" x 75 1/4"
2080	27 1/4" x 99 1/4"	4070	51 1/4" x 87 1/4"
20100	27 1/4" x 123 1/4"	4080	52 1/4" x 100 1/4"
3030	39 1/4" x 39 1/4"	40100	52 1/4" x 123 1/4"
3050	39 1/4" x 75 1/4"	5050	63 1/4" x 63 1/4"
3060	39 1/4" x 75 1/4"	5060	63 5/8" x 75 5/8"
3080	39 1/4" x 99 1/4"	5070	63 1/4" x 87 1/4"
30100	39 1/4" x 123 1/4"	5080	63 1/4" x 99 1/4"
4040	51 1/4" x 51 1/4"	50100	63 1/4" x 123 1/4"

Solar Heat Gain Coefficient = .42, U Value = .74, Visible Light Transmission = .68

Specifications

A. Skylights shall be Sunoptics model 800MD (curb mounted) as manufactured by Sunoptics Skylights, 6201 27th Street, Sacramento, Ca. 95822 916/395-4700

B. Skylights shall be glazed ready for installation.

C. Skylight frames shall be fabricated from 6063 T6 aluminum, finish to be natural mill. Frames shall have integral condensation and weepage gutters which drain interior moisture to the outside. Corners shall be mitered and welded. The acrylic glazing shall be separated from the skylight frame with a Silicon Seal.

D. Skylights shall be Double glazed using SR40 50% or 100%, Impact Modified Clear Prismatic over SR25 White Prismatic lens, CC2 Rated, glazed in a Signature Series Dome configuration.

E. Standard Size units up to 5080 are tested and certified to AAMA/WDMA/CSA101/I.S.2/A440-05 to comply with section 2405.5 of the International Building Code.

F. (Optional) OSHA compliant Safety Security Screen fabricated from an OSHA Compliant 1910, 1926.502 wire mesh. The safety screen shall be tested to withstand the impact of a 240 pound weight, one foot in diameter, dropped from a height of 3 feet and support a concentrated load of 600 pounds after the impact. Install using Screws and Clips provided at 12" O.C. between cross members.

SUNOPTICS®
High Performance Prismatic Daylighting
An AcuityBrands Company

6201 27th Street
Sacramento, CA
95822
www.sunoptics.com

916/395-4700
800/289-4700
FAX/395-9204

U.S. GREEN BUILDING COUNCIL MEMBER

20 YEAR LIMITED LEAK FREE PRISMATIC SKYLIGHT WARRANTY

CUSTOMER:_____ **PROJECT ADDRESS:**_____

UNIT & QTY:_____ **DATE ISSUED:**_____ **CONTRACTOR:**_____

This limited warranty applies to Sunoptics 100% Impact Modified Acrylic and Polycarbonate skylight systems and warrants that the specified products will be leak free for a period of 20 years from date of purchase.

EXCLUSIONS AND LIMITATIONS:

The warranty period begins from the date the Sunoptics product is purchased, and must be substantiated with the original invoice or sales receipt. If the purchase date cannot be substantiated, the warranty period will begin with the date of manufacture as recorded by Sunoptics Prismatic Skylights. This warranty does not cover any labor cost associated with the installation of replacement products. The providing of replacement products shall not extend the original warranty period. Sunoptics reserves the right to provide a similar replacement product if the original version is no longer available at the time of the complaint. This warranty will only apply if the product is finished and installed in accordance with Sunoptics instructions. This warranty does not cover the repair or replacement of products damaged as a result of accident, including but not limited to accidental breakage, abuse, misuse, faulty building construction or design, improper or insufficient handling, applications in areas of high humidity control, acts of God, products subjected to conditions outside their design limitations, minor imperfections in plastic components that do not affect the product in performance or obscure light transmittance; minor variations in plastic coloration; damage caused by corrosive environmental factors including acid rain and reactive cleaning agents. Lenses should only be cleaned using just water or mild dish soap. NEVER use ammonia, aromatic or petroleum based cleaning agents, adhesives or construction products. Use of such products will immediately void warranty. Normal wear and tear is not covered by this warranty. Flashings are not covered by this warranty. Condensation on skylights and any related water damage, which may occur as a natural result of very high humidity within a building or a variation between indoor/outdoor temperatures, is not a defect and will not be covered by this warranty.

Limitations of Liabilities

a) Except as specifically provided in this agreement, we make no warranties, express or implied, and specifically disclaim any warranty of merchantability or fitness for a particular purpose. Purchaser's right to recover damages for any reason whatsoever shall be limited to the total of amounts paid by purchaser for purchase of product hereunder.

b) Neither we nor our affiliated parties shall be liable for any indirect, incidental or consequential damages, foreseen or unforeseen, including lost profits, sustained in connection with the use of products provided under this agreement, regardless of the form of action, whether in contract or in tort, including negligence, strict liability or otherwise.

c) Any action against us must be brought within 30 days after the cause of action accrues. We shall not be liable for any delay, loss, damage or product failure attributable to any equipment or actions of any person other than ourselves, our employees and agents.

Claims

Claims for defective material, shortages, delays, failures in shipment or delivery for any other cause shall be deemed waived and released by purchaser unless made IN WRITING WITHIN 30 DAYS AFTER ARRIVAL OF MATERIAL. If material is delivered short, or damaged due to carrier mishandling, receiver must make note on the delivery receipt in order to receive replacement material. Under no circumstances shall purchaser install damaged or defective material if claims are to be made.

Liability for Misuse

We shall not be liable for damages to property or persons due to improper installation of our material or through attempts to utilize the material under conditions which exceed the designed capabilities. Purchaser agrees to indemnify and hold us harmless from any and all claims, liabilities, damages, costs and expenses asserted against us or incurred by us because of injuries to persons or damages to property resulting from the improper installation or misuse of the material.

APPROVAL SIGNATURE:_____ TITLE:_____ DATE:_____

Architectural Coatings

SPEEDHIDE® SUPER TECH® Interior Dry-Fog Eggshell

GENERAL DESCRIPTION

SPEEDHIDE® SUPER TECH® Alkyd Interior Dry-Fog is a premium, fast-drying, eggshell designed for interior ceilings and overhead surfaces. With its excellent adhesion to a variety of substrates, this dry-fog is a low odor alkyd. Its higher hiding white finish dry falls in 10 feet under normal conditions. This product produces a minimum amount of overspray which may be wiped or swept away with a dry cloth or brush. SPEEDHIDE SUPER TECH Alkyd Interior Dry-Fog is ideal for gymnasiums, commercial warehouses, factories, retail outlets, and parking structures.

RECOMMENDED SUBSTRATES

Concrete
Concrete/Masonry Block
Ferrous Metal
Gypsum Wallboard-Drywall
Masonry
Pre-primed Metal Decking
Wood

APPLICATION INFORMATION

Stir thoroughly before use. Free Fall: 8 to 10 ft. (2.4 - 3.0 m). Dry fog paint dries at varying distances from the area being sprayed. It is dependant upon the degree of air movement, temperature color, and humidity conditions. At higher relative humidities, it will dry more slowly. Test free falling drying distance before proceeding. USE WITH ADEQUATE VENTILATION. KEEP OUT OF REACH OF CHILDREN. Read all label and Material Safety Data Sheet (MSDS) information prior to use. MSDS are available through our website or by calling 1-800-441-9695.

Application Equipment: Changes in application equipment, pressure and/or tip sizes may be required depending on ambient temperatures and application conditions.
Spray equipment must be handled with due care and in accordance with manufacturer's recommendation. High-pressure injection of coatings into the skin by airless equipment may cause serious injury.
Explosion-proof equipment must be used when coating with these materials in confined areas. Keep containers closed and away from heat, sparks, and flames when not in use.

Airless Spray: Pressure 1500-3000 psi, tip 0.017" - 0.019"
Conventional Spray: Not recommended

Thinning: Do not thin.

Permissible temperatures during application:

Material:	60 to 90ºF	16 to 32ºC
Ambient:	50 to 100ºF	10 to 38ºC
Substrate:	50 to 100ºF	10 to 38ºC

TINTING AND BASE INFORMATION

Refer to the appropriate color formula book, automatic tinting equipment, and or computer color matching system for color formulas and tinting instructions.

6-151XI White

Some colors, drastic color changes, or porous substrates may require more than one coat to achieve a uniform finish.

PRODUCT DATA

PRODUCT TYPE:	Alkyd
SHEEN:	Eggshell: 50 to 70 (85º Gloss Meter)
VOLUME SOLIDS:	48% +/- 2%
WEIGHT SOLIDS:	74% +/- 2%
VOC:	389 g/L (3.2 lbs./gal.)
LIGHT REFLECTANCE:	81
WEIGHT/GALLON:	12.5 lbs. (5.8 kg) +/- 0.2 lbs. (91 g)

COVERAGE: Approximately 321 to 535 sq. ft./gal. (29.8 to 49. sq. m/3.78L) on nonporous surfaces.

Wet Film Thickness:	3.0 to 5.0 mils
Wet Microns:	76 to 127
Dry Film Thickness:	1.4 to 2.4 mils
Dry Microns:	36 to 61

Coverage figures do not include loss due to surface irregularities and porosity or material loss due to application method or mixing.

DRYING TIME: Dry time @77ºF (25ºC); 50% relative humidity.

To Touch:	1 hour
To Recoat:	2 hours
Free Fall:	10 ft.

Variations in temperature, humidity, color, and ventilation may affect dry fall distance and drying times.

CLEANUP: Paint thinner
DANGER: Rags, steel wool or waste soaked with this product may spontaneously catch fire if improperly discarded. Immediately after use, place rags, steel wool or waste in a sealed water-filled metal container. Refer to www.ppgac.com, Spontaneous Combustion Advisory for additional information.

DISPOSAL: Contact your local environmental regulatory agency for guidance on disposal of unused product. Do not pour down a drain or storm sewer.

FLASH POINT: 107ºF (41.7ºC)

FEATURES AND BENEFITS

Features	Benefits
Excellent hiding power	Hides surface imperfections
Excellent coverage	Saves money and requires less material
Dry falls at ten feet	Limits use of masking equipment & reduces cleanup
Excellent adhesion	Adheres to a variety of surfaces
Light reflecting white	Increases lighting efficiency
Lower odor alkyd	Minimizes disruption to workers
Minimal yellowing	Provides a whiter finish versus traditional alkyds

PERFORMANCE DATA

Property	Test Method	Result	Property	Test Method	Result
Adhesion	ASTM D3359	Passes	Impact Resistance	ASTM D2794	Passes
Flexibility	ASTM D522	Passes	Pencil Hardness	ASTM D3363	F

GENERAL SURFACE PREPARATION

Surfaces to be coated must be dry, clean, sound, and free from all contamination including loose and peeling paint, dirt, grease, oil, wax, concrete curing agents and bond breakers, chalk, efflorescence, mildew, rust, product fines, and dust. Remove loose paint, chalk, and efflorescence by wire brushing, scraping, sanding, and/or pressure washing. Putty all nail holes and caulk all cracks and open seams. Sand all glossy, rough, and patched surfaces. Feather back all rough edges to sound surface by sanding. Prime all bare and porous substrates with an appropriate primer as recommended in primers section. If unsure of suitability of the substrate for painting, first spot check the product to test for adhesion performance. WARNING! If you scrape, sand, or remove old paint, you may release lead dust or fumes. LEAD IS TOXIC. EXPOSURE TO LEAD DUST OR FUMES CAN CAUSE SERIOUS ILLNESS, SUCH AS BRAIN DAMAGE, ESPECIALLY IN CHILDREN. PREGNANT WOMEN SHOULD ALSO AVOID EXPOSURE. Wear a properly fitted NIOSH-approved respirator and prevent skin contact to control lead exposure. Clean up carefully with a HEPA vacuum and a wet mop. Before you start, find out how to protect yourself and your family by contacting the USEPA National Lead Information Hotline at 1-800-424-LEAD or log on to www.epa.gov/lead. In Canada contact a regional Health Canada office. Follow these instructions to control exposure to other hazardous substances that may be released during surface preparation.

CONCRETE and MASONRY: New concrete should cure for at least 30 days and preferably 90 days prior to priming and painting. The pH of the substrate must be less than 10 before painting.

CONCRETE/MASONRY BLOCK: Mortar should cure for at least 30 days and preferably 90 days prior to priming. Fill block with an appropriate block filler. Surfaces previously coated with water thinned cement-based paint must be prepared with extra care. If the material appears to be adhering tightly, a masonry sealer may be applied to seal the surface. Check adhesion by applying a piece of masking tape. If the sealer peels off and has loose particles, remove all chalking or crumbling material, re-seal and re-check adhesion.

FERROUS METAL: The surface must be cleaned thoroughly to remove any dust, rust, and surface contaminants, and then primed.

GYPSUM WALLBOARD-DRYWALL: Nails or screws should be countersunk, and they along with an indentations should be mudded flush with the surface, sanded smooth and cleaned to remove any dust prior to painting the substrate.

PRE-PRIMED METAL DECKING: This substrate may present potential adhesion problems. Topcoats should be spot applied, allowed to cure overnight, and then evaluated for adhesion. If adhesion is good, the application may proceed.

WOOD: Unpainted wood or wood in poor condition should be sanded smooth, wiped clean, then primed. Any knots or resinous areas must be sealed before painting. Countersink all nails, putty flush with surface, then prime.

RECOMMENDED PRIMERS

Concrete	4-603, 17-921
Concrete/Masonry Block (block fillers)	6-7, 6-15
Concrete/Masonry Block (primers, sealers)	4-603, 17-921
Ferrous Metal	6-208, 90-712
Gypsum Wallboard-Drywall	6-2, 6-4, 9-900
Masonry	4-603, 17-921
Wood	1-70, 6-809, 6-9, 9-900, 17-921

PACKAGING

5-Gallon (18.9 L)
55 Gallon (208 L) container

LIMITATIONS OF USE

Apply when air, surface and product temperatures are above 50ºF (10ºC) and surface temperature is at least 5ºF (3ºC) above the dew point. Swept up dry overspray may ignite spontaneously. Wet and dispose of all collected dry overspray immediately. Sweep up dry overspray before rolling scaffold or allowing foot traffic into the area. Some types of machinery and equipment may still require protection against possible damage to working parts such as bearings.

Not recommended for use on floors, machinery, or in direct contact with corrosive chemicals. All alkyd products change color with age. The yellow discoloration is most visible in white and light colors. PPG latex products are recommended when yellowing is a concern.

PPG Architectural Finishes, Inc. believes the technical data presented is currently accurate: however, no guarantee of accuracy, comprehensiveness, or performance is given or implied. Improvements in coatings technology may cause future technical data to vary from what is in this bulletin. For complete, up-to-date technical information, visit our web site or call 1-800-441-9695.

PPG Industries, Inc.
Architectural Coatings
One PPG Place
Pittsburgh, PA 15272
www.ppgpittsburghpaints.com
www.ppgporterpaints.com

Technical Services
1-800-441-9695
1-888-807-5123 fax

Architect/Specifier
1-888-PPG-IDEA

PPG Canada, Inc.
Architectural Coatings
4 Kenview Blvd
Brampton, ON L6T 5E4

H19 3/2010
(Supersedes 2/2010)

HPC/Industrial Maintenance

SPEEDHIDE® Int/Ext Rust Inhibitive Steel Primers

Generic Type

Alkyd Resin

General Description

Recommended for properly prepared iron and steel surfaces for either interior or exterior service. SPEEDHIDE® Rust Inhibitive Primer provides surface corrosion protection under normal exposure conditions. For metal substrates only.

Recommended Uses

Ferrous Metal

Features / Benefits

Excellent Adhesion
Corrosion-Resistant in Normal Atmospheric Conditions
Performance Offset to Federal Standards TT-P-636, TT-P-0645, TT-P-0664
6-212, MPI category #23, Surface Tolerant Metal Primer

Limitations of Use

Apply when air and surface temperatures are above 50°F (10°C), and surface temperature is at least 5°F (3°C) above the dew point. Avoid exterior application late in the day when dew and condensation are likely to form or if rain is threatening. Not intended for use as a finish coat or for immersion service. If left untopcoated for longer than 7 days, cleaning and light sanding of the surface is recommended. Allow to dry 24 hours before applying water base topcoat. FOR METAL SUBSTRATES ONLY. Drying times listed may vary depending on temperature, humidity and air movement. DANGER: Rags, steel wood or waste soaked with this product may spontaneously catch fire if improperly discarded. Immediately after use, place rags, steel wool or waste in a sealed water-filled metal container. Refer to www.pittsburghpaints.com, Spontaneous Combustion Advisory for additional information.

Tinting and Base Information

DO NOT TINT.

6-208	Red
6-212	White

Product Data

Gloss:	Flat
VOC*:	2.75 lbs/gal 330.00 g/L
Coverage:	450 to 600 sq ft/gal (42 to 56 sq. m/3.78L)

Note: Does not include loss due to varying application method, surface porosity, or mixing.

DFT:	1.5 minimum to 2.0 maximum
Weight/Gallon*:	11.6 lbs. (5.3 kg) +/- 0.2 lbs. (91 g)
Volume Solids*:	56.5% +/- 2%
Weight Solids*:	75.8% +/- 2%
Clean-up:	Paint Thinner

Results will vary by color, thinning and other additives.
*Product data calculated on 6-212

Drying Time:

To Touch:	8 hours
To Handle:	16 hours
To Recoat:	16 hours

Dry Time @77°F (25°C); 50% relative humidity

Flash Point: 106°F, (41.1°C)

General Surface Preparation

The surface to be coated must be dimensionally stable, dry, clean, and free of oil, grease, release agents, curing compounds, and other foreign materials. The service life of the coating is directly related to the surface preparation. Surface must be clean, dry and free from dirt, loose paint, oil, grease, wax, rust, loose mill scale and other contamination. Remove oil and grease by solvent cleaning. Sand all slick or glossy surfaces. Minimum surface preparation: SSPC-SP-2, Hand Tool Cleaning. Recommended surface preparation: SSPC-SP 6 Commercial Blast. Anchor pattern requirement 1.0 to 1.5 mils suitable for a thin film alkyd system. For most direct-to-metal applications, brushing may improve adhesion to the surface. Primer should not be left untopcoated for an extended period of time. Finish coats should be applied as soon as possible after primer has dried. If the primer is left untopcoated for longer than 7 days, cleaning and light sanding of the surface is recommended. On exterior surfaces, remove and inhibit regrowth of mildew by using PPG MILDEW CHECK® Multi-Purpose Wash, 18-1. Before use, be sure to read and follow the instructions and warnings on the PPG MILDEW CHECK® Multi-Purpose Wash label. WARNING! If you scrape, sand, or remove old paint, you may release lead dust or fumes. LEAD IS TOXIC. EXPOSURE TO LEAD DUST OR FUMES CAN CAUSE SERIOUS ILLNESS, SUCH AS BRAIN DAMAGE, ESPECIALLY IN CHILDREN. PREGNANT WOMEN SHOULD ALSO AVOID EXPOSURE. Wear a properly fitted NIOSH-approved respirator and prevent skin contact to control lead exposure. Clean up carefully with a HEPA vacuum and a wet mop. Before you start, find out how to protect yourself and your family by contacting the USEPA National Lead Information Hotline at 1-800-424-LEAD or log on to www.epa.gov/lead. In Canada contact a regional Health Canada office. Follow these instructions to control exposure to other hazardous substances that may be released during surface preparation.

FERROUS METAL: The recommended surface preparation is Commercial Blast Clean per SSPC-SP6. The minimum surface preparation is Hand Tool or Power Tool Clean per SSPC-SP2 or SP3.

Recommended Primers

Directions for Use

Stir thoroughly before using and frequently during use. USE WITH ADEQUATE VENTILATION. KEEP OUT OF REACH OF CHILDREN. Explosion-proof equipment must be used when coating with these materials in confined areas. Keep containers closed and away from heat, sparks, and flames when not in use. Read all label and Material Safety Data Sheet (MSDS) information prior to use. MSDS are available through our website or by calling 1-800-441-9695.

Permissible temperatures during application:

Material:	60 to 90°F	16 to 32°C
Ambient:	50 to 100°F	10 to 38°C
Substrate:	50 to 130°F	10 to 54°C

Application Information

Recommended Spread Rates:

Wet Mils :	2.7	minimum to	3.5	maximum
Wet Microns:	68.6	minimum to	88.9	maximum
Dry Mils :	1.5	minimum to	2.0	maximum
Dry Microns:	38.1	minimum to	50.8	maximum

Application Equipment: Changes in application equipment, pressures and/or tip sizes may be required depending on ambient temperatures and application conditions. Spray equipment must be handled with due care and in accordance with manufacturer's recommendation. High-pressure injection of coatings into the skin by airless equipment may cause serious injury.

Conventional Spray: Graco 210-961 Series A or equivalent. 0.070" (1.78 mm) cap, 0.061" (1.55 mm).

Airless Spray: Pressure 2000 - 2600 psi, tip 0.015 - 0.023" Hose diameter: 1/4" r

Brush: High Quality Polyester/Nylon Brush

Roller: High Quality Roller Cover

Thinning:
DO NOT THIN.

Packaging: 1-Gallon (3.78L) 5-Gallon (18.9L)

Not all products are available in all sizes. All containers are not full-filled.

PPGAF believes the technical data presented is currently accurate: however, no guarantee of accuracy, comprehensiveness, or performance is given or implied. Improvements in coatings technology may cause future technical data to vary from what is in this bulletin. For complete, up-to-date technical information, visit our web site or call 1-800-441-9695.

PPG Industries, Inc.
Architectural Coatings
One PPG Place
Pittsburgh, PA 15272
www.ppghpc.com

Technical Services
1-800-441-9695
1-888-807-5123 fax

Architect/Specifier
1-888-PPG-IDEA

PPG Architectural Finishes
400 S. 13th Street
Louisville, KY 40203

PPG Canada, Inc.
Architectural Coatings
4 Kenview Blvd
Brampton, ON L6T 5E4

Architectural Coatings

SPEEDHIDE® Interior Semi-Gloss Acrylic Latex

Generic Type

Acrylic Latex

General Description

Our best professional interior semi-gloss latex formulated to meet the performance requirements of professional applicators. SPEEDHIDE® Interior Semi-Gloss Acrylic Latex is designed as a high hiding product with excellent washability. It provides a smooth, semi-gloss finish on interior walls, ceilings, cabinets and trim surfaces. Recommended for use on properly prepared wallboard, wallpaper (without metallic design), wood, metal, cured plaster and masonry surfaces.

Recommended Uses

Ceilings	Masonry
Primed Metal	Wallboard
Wallpaper (without metallic design)	Walls

Features / Benefits

High Hiding
Scrubbable
Moisture Resistant
Block Resistant
Smooth, Semi-Gloss Finish
Soap & Water Clean-Up
MPI Approval in category #54, Interior Latex Semi-Gloss, Gloss Level 5
MPI Approval in category #141, Interior High Performance Latex, Gloss Level 5

Limitations of Use

Apply when air, surface and product temperatures are above 50°F (10°C). PROTECT FROM FREEZING. Not recommended for use on floors. Drying times listed may vary depending on temperature, humidity and air movement.

Tinting and Base Information

Use PITTSBURGH® Paints Custom Colorants to achieve hundreds of colors. Refer to THE VOICE OF COLOR® formula book for tinting instructions.

6-500	White and Pastel Base
6-515	Midtone Base
6-516	Deeptone Base
6-517	Neutral Base
6-544	Off White
6-576	Bone White

Product Data

Gloss: Semi-Gloss: 50 to 60 (60º Gloss Meter)
VOC*: 0.75 lbs/gal (90.00 g/L)
DFT: 1.50 minimum to 1.70 maximum mils
Coverage: 350 to 400 sq. ft./gal. (33 to 37 sq. m/3.78L)
Note: Does not include loss due to varying application method, surface porosity, or mixing.
Volume Solids*: 37% +/- 2.0%
Weight Solids*: 50% +/- 2.0%
Weight/Gallon*: 10.5 lbs. (4.8 kg) +/- 0.2 lbs. (91 g)
Cleanup: Soap and Water
*Product data calculated on product 6-500.

Drying Time:

To Touch:	1 hour
To Handle:	2 hours
To Recoat:	4 hours
To Full Cure:	30 days

Dry Time @77°F (25°C); 50% relative humidity

Flash Point: Over 200°F, (93°C)

General Surface Preparation

Surface to be painted must be clean, dry, smooth, and free from surface contaminants. All cracks and other surface imperfections must be repaired and spot-primed. Dull glossy surfaces by sanding. Prime all bare wood, plaster, masonry, metal, patched and porous surfaces with the appropriate primer. WARNING! If you scrape, sand, or remove old paint, you may release lead dust or fumes. LEAD IS TOXIC. EXPOSURE TO LEAD DUST OR FUMES CAN CAUSE SERIOUS ILLNESS, SUCH AS BRAIN DAMAGE, ESPECIALLY IN CHILDREN. PREGNANT WOMEN SHOULD ALSO AVOID EXPOSURE. Wear a properly fitted NIOSH-approved respirator and prevent skin contact to control lead exposure. Clean up carefully with a HEPA vacuum and a wet mop. Before you start, find out how to protect yourself and your family by contacting the USEPA National Lead Information Hotline at 1-800-424-LEAD or log on to www.epa.gov/lead. In Canada contact a regional Health Canada office. Follow these instructions to control exposure to other hazardous substances that may be released during surface preparation.

NEW WOOD: New wood should be sanded smooth and wiped clean. Any knots or resinous areas should be sealed before painting. Countersink all nails. Putty flush with surface, then prime.

NEW PLASTER: Fresh plaster, or other alkaline surfaces should be allowed to cure for at least 30 days prior to priming with an alkali resistant primer.

CONCRETE BLOCK, CINDER BLOCK, VERTICAL MASONRY: New concrete should cure for at least 30 days and preferably 90 days prior to priming. Fill block with an appropriate block filler.

METAL: Rust and other surface contaminates must be removed from ferrous metals, aluminum, copper, brass, and galvanized steel. Then the surface must be cleaned thoroughly to remove any dust.

GALVANIZED STEEL: Caution must be used when selecting coatings for use on all galvanized metal surfaces. These substrates may have a factory-applied stabilizer, which is used to prevent white rusting during storage and shipping. Such stabilizers must be removed by either brush blasting, sanding or chemical treatment.

WATER-SOLUBLE STAINS: Apply SEAL-GRIP® Primer 17-921 or 17-931, over stained area prior to coating, to avoid bleeding of the stain into the topcoat.

Recommended Primers

Wood	17-921, 17-955, 17-971
Ferrous Metal	6-208, 6-212, 90-712
Galvanized Steel	6-209, 90-712
Gypsum Wallboard-Drywall	6-2, 17-921
Plaster	4-603
Concrete Masonry Units, Masonry (Block Fillers)	6-7, 6-15, 6-16
Concrete, Masonry (Primers, Sealers)	4-603, 4-808

Directions for Use

Stir thoroughly before using and occasionally when in use. When using more than one can of the same color, mix together (box) before applying. USE WITH ADEQUATE VENTILATION. KEEP OUT OF REACH OF CHILDREN. Read all label and Material Safety Data Sheet (MSDS) information prior to use. MSDS are available through our website or by calling 1-800-441-9695.

Permissible temperatures during application:

Material:	50 to 90°F	10 to 32°C
Ambient:	50 to 100°F	10 to 38°C
Substrate:	50 to 100°F	10 to 38°C

Application Information

Recommended Spread Rates:

Wet Mils :	4.0	minimum to	4.6	maximum
Wet Microns:	100.0	minimum to	117.0	maximum
Dry Mils :	1.5	minimum to	1.7	maximum
Dry Microns:	38.0	minimum to	43.0	maximum

Application Equipment: Apply with a high quality brush, paint pad, or by spray equipment. Spray equipment must be handled with due care and in accordance with manufacturer's recommendation. High-pressure injection of coatings into the skin by airless equipment may cause serious injury.

Airless Spray: Pressure 2000 psi, tip 0.015" - 0.021"
Brush: High Quality Polyester/Nylon Brush
Roller: 3/16" - 3/8" nap roller cover

Thinning:

No thinning is usually required. If necessary add up to 1/4 pint (118 mL) of water per gallon (3.78 L) of paint.

Packaging: 1-Gallon (3.78L)
5-Gallon (18.9L)

Not all products are available in all sizes.

PPGAF believes the technical data presented is currently accurate: however, no guarantee of accuracy, comprehensiveness, or performance is given or implied. Improvements in coatings technology may cause future technical data to vary from what is in this bulletin. For complete, up-to-date technical information, visit our web site or call 1-800-441-9695.

PPG Industries, Inc.
Architectural Coatings
One PPG Place
Pittsburgh, PA 15272
www.pittsburghpaints.com

Technical Services
1-800-441-9695
1-888-807-5123 fax

Architect/Specifier
1-888-PPG-IDEA

PPG Architectural Finishes
400 S. 13th Street
Louisville, KY 40203

PPG Canada, Inc.
Architectural Coatings
4 Kenview Blvd
Brampton, ON L6T 5E4

Architectural Coatings

ZONELINE™ Traffic & Zone Marking Paint

GENERAL DESCRIPTION

Our high quality, 100% acrylic traffic and zone marking paints are formulated to meet the performance requirements of professional applicators. PPG ZONELINE paints are easy to apply with standard line stripers or by brush or roller. These quick drying formulas allow traffic to resume swiftly and will not bleed on the surface. ZONELINE paints are durable and abrasion resistant to heavy traffic and weather conditions avoiding frequent reapplication. Recommended for use on fully cured asphalt, concrete and brick masonry.

RECOMMENDED USES

Parking lots & garages	Roads, highways & traffic lanes
Pedestrian crosswalks	Airport runways
Fire lanes	Loading zones
Manufacturing plants	Warehouses

CONFORMANCE STANDARDS

VOC compliant in all regulated areas

APPLICATION INFORMATION

Stir thoroughly before using and frequently during use. USE WITH ADEQUATE VENTILATION. KEEP OUT OF REACH OF CHILDREN. Read all label and Material Safety Data Sheet (MSDS) information prior to use. MSDS are available through our website or by calling 1-800-441-9695

Application Equipment: Apply with a high quality brush, roller, or by airless spray equipment.
Airless Spray: Pressure 2000 psi, tip 0.015" - 0.021"
Spray equipment must be handled with due care and in accordance with manufacturer's recommendation. High-pressure injection of coatings into the skin by airless equipment may cause serious injury.
Brush: Polyester/Nylon Brush
Roller: All purpose nap roller cover.
Thinning: No thinning required. If necessary, use clean water sparingly. Water addition will increase drying time.
Permissible temperatures during application:

Material:	50 to 90ºF	10 to 32ºC
Ambient:	50 to 100ºF	10 to 38ºC
Substrate:	50 to 100ºF	10 to 38ºC

TINTING AND BASE INFORMATION

11-53	White
11-54	Yellow
11-55	Handicap Blue
11-56	Red

PRODUCT DATA

PRODUCT TYPE:	100% Acrylic Latex
SHEEN:	Flat: 0 to 5 (60º & 85º Gloss Meter)
VOLUME SOLIDS*:	57% +/- 2%
WEIGHT SOLIDS*:	75% +/- 2%
VOC*:	40 g/L (0.3 lbs./gal.)
WEIGHT/GALLON*:	14.1 lbs. (6.4 kg) +/- 0.2 lbs. (91 g)

*Product data calculated on product 11-53.

COVERAGE: One U.S. gallon (3.78 L) covers approximately 320 linear feet (97.5 linear meters) of four inch (10.2 cm) wide stripe. Approximately 107 sq. ft. (9.94 sq. meters) at 15 wet mils. Coverage figures do not include spray loss due to surface irregularities, or material loss when mixing.

Wet Film Thickness:	15 mils
Wet Microns:	381
Dry Film Thickness:	8.6 mils
Dry Microns:	218.4

Coverage does not include loss due to surface irregularities and porosity or material loss due to application method or mixing.

DRYING TIME: Dry time @77ºF (25ºC); 50% relative humidity.

To Touch:	15 minutes
For Traffic:	50 minutes

If precipitation is expected, a minimum of 4 hours cure time at temperatures above 50ºF (10ºC) and below 80% relative humidity is required. Drying times listed may vary depending on temperature, humidity, film build, color, and air movement.
CLEAN UP: Clean tools with soap and water as soon as possible after application.

DISPOSAL: For disposal guidance of unused amount, contact your local environmental regulatory agency. Do not pour down a drain or storm sewer.

FLASH POINT: Over 200ºF (93ºC)

FEATURES AND BENEFITS

Features	Benefits
Good application to asphalt, concrete, and brick masonry	Easy to apply by line striper, brush or roller
Minimizes bleeding upon application	Keeps lines crisp
Fast dry time	Vehicle and pedestrian traffic can resume quickly
Prevents dirt pick-up	Stripes remain clean
Highly durable coating	Lines are resistant to wear and last longer
Good color fastness	Lines remain visible to traffic and pedestrians
Contractors can add glass traffic beads	Achieve more reflective markings
VOC Compliant	Lower than Federal AIM & SCAQMD Regulations

PERFORMANCE DATA

Property	Test Method	Result
Bleeding Ratio	ASTM D969	Pass
Dry-No-Pickup	ASTM D711; TT-P-1952B	Pass - 75 minute max
Flash Point	ASTM D3278	Over 200° F (93ºC)
Flexibility	TT-P-1952B	Pass
Scrub Resistance	ASTM D2486	Pass
Viscosity	ASTM D562	90-100 KU

GENERAL SURFACE PREPARATION

Paint only clean, dry, deglossed surfaces. Remove dirt, oils, grease, dust and other contaminants. Remove loose paint by wire brushing, powerwashing, or sweep blast cleaning as required. Allow surfaces to dry thoroughly before coating. WARNING! If you scrape, sand, or remove old paint, you may release lead dust or fumes. LEAD IS TOXIC. EXPOSURE TO LEAD DUST OR FUMES CAN CAUSE SERIOUS ILLNESS, SUCH AS BRAIN DAMAGE, ESPECIALLY IN CHILDREN. PREGNANT WOMEN SHOULD ALSO AVOID EXPOSURE. Wear a properly fitted NIOSH-approved respirator and prevent skin contact to control lead exposure. Clean up carefully with a HEPA vacuum and a wet mop. Before you start, find out how to protect yourself and your family by contacting the USEPA National Lead Information Hotline at 1-800-424-LEAD or log on to www.epa.gov/lead. In Canada contact a regional Health Canada office. Follow these instructions to control exposure to other hazardous substances that may be released during surface preparation.

For reflectorization, drop-on glass beads should be applied immediately after the paint with the optimum amount being 6 lbs. per gallon of paint uniformly spread over the entire line.

NEW ASPHALT: All new asphalt surfaces should be properly cured before striping. Most asphalt surfaces require a minimum of two weeks curing; however, this may vary on the blend of asphalt to aggregate. Improperly blended or cured asphalt will not withstand the stress exerted by the curing of the paint film and therefore the areas striped may pull the asphalt loose. If there is any doubt regarding this, apply a small stripe of paint to an area and allow to cure and observe the results before striping the entire area. Fresh asphalt surfaces have a tendency to bleed. Apply a thin first coat (approximately 5 mils) on the surface, allow to cure about a week, and then apply a regular coat (15 mils) as a final stripe. Each individual user must decide the type of surface being coated and the method to be used.

NEW CONCRETE: New concrete surfaces are very difficult to adhere to due to their curing compounds. Most curing compounds take 8 to 12 weeks to dissipate. Therefore, painting a concrete surface less than 3 months old is NOT RECOMMENDED.

RECOMMENDED PRIMERS

None. Refer to Surface Preparation Recommendations.

LIMITATIONS OF USE

Apply only when air and surface temperatures are above 50ºF (10ºC) with temperatures expected to remain above 50ºF (10ºC) for 4 hours. Surface temperature must be at least 5ºF (3ºC) above the dew point.

PROTECT FROM FREEZING.

All paint lines should be adequately protected until they are track free before traffic is allowed over the line.

PACKAGING

1-Gallon (3.78 L)

Some products available in 5-Gallon (18.9 L) containers.

PPG Architectural Finishes, Inc. believes the technical data presented is currently accurate: however, no guarantee of accuracy, comprehensiveness, or performance is given or implied. Improvements in coatings technology may cause future technical data to vary from what is in this bulletin. For complete, up-to-date technical information, visit our web site or call 1-800-441-9695.

PPG Industries, Inc.
Architectural Coatings
One PPG Place
Pittsburgh, PA 15272
www.ppgpittsburghpaints.com
www.ppgporterpaints.com

Technical Services
1-800-441-9695
1-888-807-5123 fax

Architect/Specifier
1-888-PPG-IDEA

PPG Canada, Inc.
Architectural Coatings
4 Kenview Blvd
Brampton, ON L6T 5E4

B2.26 2/2010
(Supersedes 6/2008)

HPC/Industrial Maintenance **PITT-GLAZE® Interior/Exterior Block Filler Latex**

Generic Type

Modified Acrylic Latex

General Description

PITT-GLAZE® High Performance Acrylic Latex Block Filler is suitable for priming or filling interior or exterior porous surfaces of lightweight concrete or cinder block as well as cured, rough concrete or masonry. Ideal for use in hospitals, food, processing plants and other industrial areas where there is high humidity, and intermittent moisture.

Recommended Uses

Concrete, Stucco, Plaster, Masonry
CMU

Features / Benefits

Water-borne formula for low odor and easy clean up.
Suitable for use in high humidity areas
Application Temperatures Down to 35ºF (2ºC)
Performance Offset to Federal Standard TT-F-1098

Limitations of Use

Apply when air and surface temperatures are above 35°F (2°C) and at least 5°F (3°C) above the dew point. Avoid exterior painting late in the day when dew or condensation are likely to form, or if rain is threatening. Not recommended as a finish coat. Do not apply to surfaces with moisture content above 12%. This block filler is not intended for use as a waterproofing compound or for surfaces demonstrating hydrostatic or high vapor pressure. PROTECT FROM FREEZING. DO NOT USE FOR IMMERSION SERVICE. Drying times listed may vary depending on temperature, humidity, color and air movement. Spray equipment must be handled with due care and in accordance with manufacturer's recommendation. High-pressure injection of coatings into the skin by airless equipment may cause serious injury.

Tinting and Base Information

Use PITTSBURGH® Paints Custom Colorants and refer to THE VOICE OF COLOR® formula book for tinting instructions.

16-90	White

Product Data

Gloss:	Flat
VOC*:	1.14 lbs/gal 137.00 g/L
Coverage:	64 to 138 sq ft/gal (6 to 13 sq. m/3.78L)

Note: Does not include loss due to varying application method, surface porosity, or mixing.

DFT:	6.0 minimum to 13.0 maximum
Weight/Gallon*:	12.7 lbs. (5.8 kg) +/- 0.2 lbs. (91 g)
Volume Solids*:	51.8% +/- 2%
Weight Solids*:	70% +/- 2%
Clean-up:	Soap and Water

Results will vary by color, thinning and other additives.
*Product data calculated on 16-90

Drying Time:

To Touch:	1 hour
To Handle:	4 hours
To Recoat:	24 hours

Dry Time @77°F (25°C); 50% relative humidity

Flash Point: 130°F, (55°C)

General Surface Preparation

The surface to be coated must be dimensionally stable, dry, clean, and free of oil, grease, release agents, curing compounds, and other foreign materials. The service life of the coating is directly related to the surface preparation. Surfaces must be free of dirt, grease, wax, mildew, form oil, curing compounds, loose or excess mortar spatter and salt deposits. Soft crumbly surface layers of previous coatings softened by water must be completely removed. All large voids, cracks, and surface imperfections should be filled with cement-sand grout. Sand all glossy surfaces. On exterior surfaces, remove and inhibit regrowth of mildew by using PPG MILDEW CHECK® Multi-Purpose Wash, 18-1. Before use be sure to read and follow the instructions and warnings on the label. Surfaces of "hot" cement-sand grout require spot priming with an alkali resistant primer. Allow new concrete and masonry to cure at least 30 days. WARNING! If you scrape, sand, or remove old paint, you may release lead dust or fumes. LEAD IS TOXIC. EXPOSURE TO LEAD DUST OR FUMES CAN CAUSE SERIOUS ILLNESS, SUCH AS BRAIN DAMAGE, ESPECIALLY IN CHILDREN. PREGNANT WOMEN SHOULD ALSO AVOID EXPOSURE. Wear a properly fitted NIOSH-approved respirator and prevent skin contact to control lead exposure. Clean up carefully with a HEPA vacuum and a wet mop. Before you start, find out how to protect yourself and your family by contacting the USEPA National Lead Information Hotline at 1-800-424-LEAD or log on to www.epa.gov/lead. In Canada contact a regional Health Canada office. Follow these instructions to control exposure to other hazardous substances that may be released during surface preparation.
CONCRETE, STUCCO, PLASTER, MASONRY other than CMU: Allow all concrete, mortar, plaster, etc. to cure for thirty (30) days under normal drying conditions. Remove all dirt, dust, grime, loose mortar and all other forms of contamination. Concrete which has been treated with curing compounds or hardeners, should be thoroughly abraded.
CONCRETE MASONRY UNITS: Allow the mortar to cure for thirty (30) days under normal drying conditions. Remove all dirt, dust, grime, loose mortar and all other forms of contamination.

Recommended Primers

Directions for Use

Mix thoroughly, using mechanical agitation until product is uniform. Airless spray plus back-rolling is recommended for a near pinhole free, smooth surface. Explosion-proof equipment must be used when coating with these materials in confined areas. Keep containers closed and away from heat, sparks, and flames when not in use. USE WITH ADEQUATE VENTILATION. KEEP OUT OF REACH OF CHILDREN. Read all label and Material Safety Data Sheet (MSDS) information prior to use. MSDS are available through our website or by calling 1-800-441-9695.

Permissible temperatures during application:

Material:	50 to 90°F	10 to 32°C
Ambient:	35 to 100°F	2 to 38°C
Substrate:	50 to 110°F	10 to 43°C

Application Information

Recommended Spread Rates:

Wet Mils :	11.6	minimum to	25.0	maximum
Wet Microns:	294.6	minimum to	637.4	maximum
Dry Mils :	6.0	minimum to	13.0	maximum
Dry Microns:	152.4	minimum to	330.0	maximum

Application Equipment: Changes in application equipment, pressures and/or tip sizes may be required depending on ambient temperatures and application conditions. Spray equipment must be handled with due care and in accordance with manufacturer's recommendation. High-pressure injection of coatings into the skin by airless equipment may cause serious injury.

Conventional Spray: Not recommended

Airless Spray: Pressure 2300 psi, tip 0.021" - 0.039"

Brush: Polyester/Nylon Brush

Roller: 3/4" nap woven roller cover

Thinning:

No thinning usually required. If necessary, up to 1/4 pint (118 mL) of water per gallon (3.78 L) may be added.

Packaging: 5-Gallon (18.9L)

Not all products are available in all sizes. All containers are not full-filled.

PPGAF believes the technical data presented is currently accurate: however, no guarantee of accuracy, comprehensiveness, or performance is given or implied. Improvements in coatings technology may cause future technical data to vary from what is in this bulletin. For complete, up-to-date technical information, visit our web site or call 1-800-441-9695.

PPG Industries, Inc.
Architectural Coatings
One PPG Place
Pittsburgh, PA 15272
www.ppghpc.com

Technical Services
1-800-441-9695
1-888-807-5123 fax

Architect/Specifier
1-888-PPG-IDEA

PPG Architectural Finishes
400 S. 13th Street
Louisville, KY 40203

PPG Canada, Inc.
Architectural Coatings
4 Kenview Blvd
Brampton, ON L6T 5E4

Architectural Coatings

SEAL GRIP® Interior/Exterior 100% Acrylic Universal Primer/Sealer

GENERAL DESCRIPTION

Our premium interior/exterior 100% acrylic latex primer is formulated to meet the performance requirements of the residential and commercial markets. SEAL GRIP® 100% Acrylic Primer/Sealer is especially formulated to block most stains - water, smoke, ink, markers, and tannin. SEAL GRIP® has exceptional adhesion to glossy surfaces. Also recommended as a whole house primer for use on properly prepared interior or exterior wood, masonry, plaster, wallboard, cement, brick, stucco, cement composition board, and wall coverings.

RECOMMENDED USES

Aluminum
Brick
Cement
Cement Composition Board
Galvanized Metal
Masonry
Plaster
Stucco
Wallboard
Wall Coverings
Wood

FEATURES / BENEFITS

Whole House Primer
Superior Adhesion
Blocks Out Stains
Fast Dry - Topcoat in 1 Hour
Low Odor
Meets MPI category #6, Exterior Latex Wood Primer
Meets MPI category #17, Bonding Primer (Water Based)
Meets MPI category #39, Interior Latex Wood Primer
Meets MPI category #137, Stain Blocking Primer (Water Based)
Can earn LEED NC Version 2.2 Credits

LIMITATIONS OF USE

Apply when air, surface and product temperatures are above 35ºF (2ºC) and when the air and surface temperatures will remain above 35ºF (2ºC) for the next 24 hours. The pH of the substrate must be less than 13 before priming. Avoid exterior priming in direct sunlight, late in the day when dew or condensation are likely to form, or when rain is anticipated. PROTECT FROM FREEZING. This product must be topcoated. Severe stains may require two coats of primer. For maximum stain resistance, allow 4 hours before applying topcoat. For severe tannin stains, 24 hours may be needed between coats.

TINTING AND BASE INFORMATION

May be tinted to approximate color of the topcoat. Use PITTSBURGH® Paints Custom Colorants and refer to THE VOICE OF COLOR® formula book for tinting instructions.

17-921	White (Tintable)
17-922	Deep Base

PRODUCT DATA

PRODUCT TYPE:	100% Acrylic Latex
GLOSS:	5 to 10 (60º Gloss Meter)
VOC*:	0.74 lbs./gal. (89 g/L)
DFT:	1.2 minimum to 1.5 maximum mils
COVERAGE*:	400 to 500 sq. ft./gal. (37 to 46 sq. m/3.78L)
Wet Film Thickness:	4.0 mils
Wet Microns:	101.6
Dry Film Thickness:	1.5 mils
Dry Microns:	38

Coverage does not include variation due to application methods, surface porosity, and/or mixing.

VOLUME SOLIDS*:	39% +/- 2%
WEIGHT SOLIDS*:	51% +/- 2%
VISCOSITY:	86 to 93 KU
WEIGHT/GALLON*:	10.5 lbs. (5.7 kg) +/- 0.2 lbs. (91 g)

*Product data calculated on product 17-921.

DRYING TIME: Dry time @77ºF (25ºC); 50% relative humidity.

To Touch:	30 minutes
To Handle:	1 hour
To Recoat:	1 hour*
To Full Cure:	4 hours

*For maximum stain resistance allow 4 hours before applying topcoat.

Drying times listed may vary depending on temperature, humidity and air movement. If drying conditions are poor, longer drying times are required to achieve stain blocking.

FLASH POINT: Over 200ºF (93ºC)

CLEAN UP: Warm, soapy water

SEAL GRIP® Interior/Exterior 100% Acrylic Universal Primer/Sealer Architectural Coatings

GENERAL SURFACE PREPARATION

Surface to be primed must be clean, dry, smooth, and free from dirt, grease, powdery or peeling paint, and other surface contaminants. Putty all nail holes and caulk all cracks and open seams. Sand all glossy, rough, and patched surfaces. Knots and resinous areas on new wood must be coated with shellac before applying primer. Sand lightly with fine sandpaper between coats. Do not wet paper with water.

WARNING! If you scrape, sand, or remove old paint, you may release lead dust or fumes. LEAD IS TOXIC. EXPOSURE TO LEAD DUST OR FUMES CAN CAUSE SERIOUS ILLNESS, SUCH AS BRAIN DAMAGE, ESPECIALLY IN CHILDREN. PREGNANT WOMEN SHOULD ALSO AVOID EXPOSURE. Wear a properly fitted NIOSH-approved respirator and prevent skin contact to control lead exposure. Clean up carefully with a HEPA vacuum and a wet mop. Before you start, find out how to protect yourself and your family by contacting the USEPA National Lead Information Hotline at 1-800-424-LEAD or log on to www.epa.gov/lead. In Canada contact a regional Health Canada office. Follow these instructions to control exposure to other hazardous substances that may be released during surface preparation.

NEW WOOD: New wood should be sanded smooth and wiped clean. Any knots or resinous areas should be sealed before painting. Countersink all nails. Putty flush with surface, then prime.

PREVIOUSLY PAINTED WOOD: All excessive chalking must be removed and the surface rinsed thoroughly. Remove all loose, peeling, or flaking paint by scraping or sanding. Feather back all rough edges to sound surface by sanding.

PLASTER, MASONRY, CONCRETE: New plaster or masonry should cure for at least 30 days and preferably 90 days prior to priming. The pH of the substrate must be less than 13 before priming.

STAIN RESISTANCE: For maximum stain resistance, allow 4 hours before applying topcoat. Drying is important to stain-blocking properties; if drying conditions are poor (low temperature, high humidity), longer drying times are required to achieve stain blocking. Severe stains may require two coats.

RECOMMENDED PRIMERS

None. See Surface Preparation Recommendations

DIRECTIONS FOR USE

Stir thoroughly before using and occasionally during use. USE WITH ADEQUATE VENTILATION. KEEP OUT OF REACH OF CHILDREN. Read all label and Material Safety Data Sheet (MSDS) information prior to use. MSDS are available through our website or by calling 1-800-441-9695.

Permissible temperatures during application:

Material:	35 to 90ºF	2 to 32ºC
Ambient:	35 to 100ºF	2 to 38ºC
Substrate:	35 to 100ºF	2 to 38ºC

APPLICATION INFORMATION

Application Equipment: Apply with a high quality brush, roller, paint pad or by spray equipment.

Airless Spray: Pressure 2000 psi, tip 0.015” - 0.021”

Spray equipment must be handled with due care and in accordance with manufacturer’s recommendation. High-pressure injection of coatings into the skin by airless equipment may cause serious injury.

Brush: Polyester/Nylon Brush

Roller: 3/8” - 3/4” nap roller cover

Thinning: For maximum stain block properties, do not thin. May be thinned sparingly with water if needed for other applications.

PACKAGING

1-Gallon (3.78 L)
5-Gallon (18.9 L)
Quart (946 mL)

Not all products are available in all sizes.

PPGAF believes the technical data presented is currently accurate: however, no guarantee of accuracy, comprehensiveness, or performance is given or implied. Improvements in coatings technology may cause future technical data to vary from what is in this bulletin. For complete, up-to-date technical information, visit our web site or call 1-800-441-9695.

PPG Industries, Inc.
Architectural Coatings
One PPG Place
Pittsburgh, PA 15272
www.pittsburghpaints.com

Technical Services
1-800-441-9695
1-888-807-5123 fax

Architect/Specifier:
1-888-PPG-IDEA

PPG Architectural Finishes
400 S. 13th Street
Louisville, KY 40203

PPG Canada, Inc.
Architectural Coatings
4 Kenview Blvd
Brampton, ON L6T 5E4

A1.25 4/2007
(Supersedes 3/2006)

HPC/Industrial Maintenance

PITT-TECH® Int/Ext High Gloss DTM Industrial Enamels

Generic Type

100% Acrylic Formula

General Description

PITT-TECH® High Gloss Industrial Enamels are a full line of 100% Acrylic water borne enamels designed for direct-to-metal application. These products provide corrosion protection, chemical and solvent resistance, and are fast drying with low odor. Recommended for use on properly prepared interior or exterior metal, masonry, plaster, and drywall surfaces. For Professional Use Only; Not Intended for Household Use.

Recommended Uses

Aluminum
Drywall
Ferrous Metal
Galvanized Steel
Concrete, Stucco, Plaster, Masonry
CMU

Features / Benefits

Excellent adhesion for true DTM performance in Pastel Base
Improved color, and gloss retention versus most alkyds and two component coatings.
High hiding
Flash rust resistant
Easy to apply, low odor
Soap & water clean up
Performance Offset to Federal Standard TT-E-2784
Meets MPI Category #154, Interior W.B. Light Industrial Coating, Gloss, MPI Gloss Level 6

Limitations of Use

Apply only when air and surface temperatures are above 50°F(10°C) and surface temperature is at least 5°F (3°C) above the dew point. Avoid exterior painting late in the day when dew or condensation are likely to form or if rain is threatening. Two coats are required for maximum protection. PROTECT FROM FREEZING. Do not use on large wood structures or for immersion service. Excessive thinning or insufficient film thickness may cause rust staining. If rust staining occurs, apply an additional coat. Drying times listed may vary depending on temperature, humidity, color and air movement.

Tinting and Base Information

Use PITTSBURGH® Paints Custom Colorants and refer to THE VOICE OF COLOR® formula book for tinting instructions.

90-306	Safety Red
90-310	Safety Blue
90-311	Safety Green
90-313	Safety Orange
90-330	Safety Yellow
90-353	Black
90-374	White and Pastel Base
90-375	Midtone Base
90-376	Deeptone Base
90-377	Deep Rustic Base

Product Data

Gloss:	Gloss: 70 to 100 (60° Gloss Meter)
VOC*:	1.60 lbs/gal 192.00 g/L
Coverage:	193 to 292 sq ft/gal (18 to 27 sq. m/3.78L)

Note: Does not include loss due to varying application method, surface porosity, or mixing.

DFT:	2.0 minimum to 3.0 maximum
Weight/Gallon*:	10.0 lbs. (4.5 kg) +/- 0.2 lbs. (91 g)
Volume Solids*:	37% +/- 2%
Weight Solids*:	48% +/- 2%
Mix Ratio:	One Component
Clean-up:	Soap and Water

Results will vary by color, thinning and other additives
*Product data calculated on 90-374

Drying Time:

To Touch:	1 hour
To Handle:	4 hours
To Recoat:	4 hours

Dry Time @77°F (25°C); 50% relative humidity

Pot Life: Not Applicable

In Service Temperature:
Dry Heat (F): 250° Dry Heat (C): 121°

Flash Point: Over 200°F, (93°C)

General Surface Preparation

The surface to be coated must be dimensionally stable, dry, clean, and free of oil, grease, release agents, curing compounds, and other foreign materials. The service life of the coating is directly related to the surface preparation. Where appropriate bare areas should be primed with a suitable primer. Pitt-Tech® Industrial Enamel Primers, 90-712 or 90-709, must be used on all bare metal substrates when using colors made from Midtone, Deeptone, and Deep Rustic bases. Remove and inhibit regrowth of mildew on exterior surfaces by using PPG Mildew Check® Multi-Purpose Wash, 18-1. Before use, be sure to read and follow the instructions and warnings on the label.

WARNING! If you scrape, sand, or remove old paint, you may release lead dust or fumes. LEAD IS TOXIC. EXPOSURE TO LEAD DUST OR FUMES CAN CAUSE SERIOUS ILLNESS, SUCH AS BRAIN DAMAGE, ESPECIALLY IN CHILDREN. PREGNANT WOMEN SHOULD ALSO AVOID EXPOSURE. Wear a properly fitted NIOSH-approved respirator and prevent skin contact to control lead exposure. Clean up carefully with a HEPA vacuum and a wet mop. Before you start, find out how to protect yourself and your family by contacting the USEPA National Lead Information Hotline at 1-800-424-LEAD or log on to www.epa.gov/lead. In Canada contact a regional Health Canada office. Follow these instructions to control exposure to other hazardous substances that may be released during surface preparation.

ALUMINUM: Solvent Clean per SSPC-SP1 to remove grease and oils.

FERROUS METAL: The recommended surface preparation is Commercial Blast Clean per SSPC-SP6. The minimum surface preparation is Hand Tool or Power Tool Clean per SSPC-SP2 or SP3.

GALVANIZED STEEL: Solvent Clean per SSPC-SP1 to remove grease and oils. If any oxidation (white rust) has formed, sand and remove all forms of contamination. If the galvanized has been passivated or stabilized, the surface must be abraded, i.e. Brush-Off Blast Clean per SSPC-SP7 or chemically treated.

HPC Systems in Detail Brochure (II10788)COATING SYSTEMS: 477-HD, 478-HD, 479-HD.

Recommended Primers

Concrete,Stucco,Plaster,Masonry other than CM Unit	4-603, 4-808
Concrete Masonry Units	6-15, 6-16, 16-90
Drywall	6-2, 9-900, 17-921
Exterior Wood	6-609, 17-921
Aluminum	Self priming, 6-204, 90-712
Ferrous Metal	Self priming, 6-208, 7-852, 90-712
Galvanized Steel	Self priming, 6-209, 90-712

Directions for Use

Mix thoroughly before and during use. USE WITH ADEQUATE VENTILATION. KEEP OUT OF REACH OF CHILDREN. Read all label and Material Safety Data Sheet (MSDS) information prior to use. MSDS are available through our website or by calling 1-800-441-9695.

Permissible temperatures during application:

Material:	60 to 90°F	16 to 32°C
Ambient:	50 to 100°F	10 to 38°C
Substrate:	50 to 130°F	10 to 54°C

Application Information

Recommended Spread Rates:

Wet Mils :	5.5	minimum to	8.3	maximum
Wet Microns:	140.0	minimum to	210.0	maximum
Dry Mils :	2.0	minimum to	3.0	maximum
Dry Microns:	50.8	minimum to	76.2	maximum

Application Equipment: Changes in application equipment, pressures and/or tip sizes may be required depending on ambient temperatures and application conditions. Spray equipment must be handled with due care and in accordance with manufacturer's recommendation. High-pressure injection of coatings into the skin by airless equipment may cause serious injury.

Conventional Spray: Fluid Nozzle: DeVilbiss gun, with 704 or 777 air cap with E tip and needle, or comparable equipment. Atomization Pressure: 55-75 Fluid Pressure: Cannot specify; dependant on numerous factors.

Airless Spray: 2000-2600 psi;tip 0.015-0.023" Hose dia. 1/4" max.

Brush: High Quality Polyester/Nylon Brush

Roller: 1" or 1 1/2" nap roller cover

Thinning:

Apply as received. If necessary, thin with a small amount of clean water. For additional open time and better flow and leveling during times of extremely low humidity and/or high temperatures up to 8 ounces of 90-740 Pitt-Tech Conditioner may be added per gallon of Pitt-Tech.

Packaging: 1-Gallon (3.78L) 5-Gallon (18.9L)

Not all products are available in all sizes All containers are not full-filled

PPGAF believes the technical data presented is currently accurate: however, no guarantee of accuracy, comprehensiveness, or performance is given or implied Improvements in coatings technology may cause future technical data to vary from what is in this bulletin For complete, up-to-date technical information, visit our web site or call 1-800-441-9695.

PPG Industries, Inc.
Architectural Coatings
One PPG Place
Pittsburgh, PA 15272
www.ppghpc.com

Technical Services
1-800-441-9695
1-888-807-5123 fax

Architect/Specifier
1-888-PPG-IDEA

PPG Architectural Finishes
400 S. 13th Street
Louisville, KY 40203

PPG Canada, Inc.
Architectural Coatings
4 Kenview Blvd
Brampton, ON L6T 5E4

HPC/Industrial Maintenance

PITT-TECH® Int/Ext High Gloss DTM Industrial Enamels

Generic Type

100% Acrylic Formula

General Description

PITT-TECH® High Gloss Industrial Enamels are a full line of 100% Acrylic water borne enamels designed for direct-to-metal application. These products provide corrosion protection, chemical and solvent resistance, and are fast drying with low odor. Recommended for use on properly prepared interior or exterior metal, masonry, plaster, and drywall surfaces. For Professional Use Only; Not Intended for Household Use.

Recommended Uses

Aluminum
Drywall
Ferrous Metal
Galvanized Steel
Concrete, Stucco, Plaster, Masonry
CMU

Features / Benefits

Excellent adhesion for true DTM performance in Pastel Base
Improved color, and gloss retention versus most alkyds and two component coatings.
High hiding
Flash rust resistant
Easy to apply, low odor
Soap & water clean up
Performance Offset to Federal Standard TT-E-2784
Meets MPI Category #154, Interior W.B. Light Industrial Coating, Gloss, MPI Gloss Level 6

Limitations of Use

Apply only when air and surface temperatures are above 50°F(10°C) and surface temperature is at least 5°F (3°C) above the dew point. Avoid exterior painting late in the day when dew or condensation are likely to form or if rain is threatening. Two coats are required for maximum protection. PROTECT FROM FREEZING. Do not use on large wood structures or for immersion service. Excessive thinning or insufficient film thickness may cause rust staining. If rust staining occurs, apply an additional coat. Drying times listed may vary depending on temperature, humidity, color and air movement.

Tinting and Base Information

Use PITTSBURGH® Paints Custom Colorants and refer to THE VOICE OF COLOR® formula book for tinting instructions.

90-306	Safety Red
90-310	Safety Blue
90-311	Safety Green
90-313	Safety Orange
90-330	Safety Yellow
90-353	Black
90-374	White and Pastel Base
90-375	Midtone Base
90-376	Deeptone Base
90-377	Deep Rustic Base

Product Data

Gloss: Gloss: 70 to 100 (60° Gloss Meter)
VOC*: 1.60 lbs/gal 192.00 g/L
Coverage: 193 to 292 sq ft/gal (18 to 27 sq. m/3.78L)
Note: Does not include loss due to varying application method, surface porosity, or mixing.
DFT: 2.0 minimum to 3.0 maximum
Weight/Gallon*: 10.0 lbs. (4.5 kg) +/- 0.2 lbs. (91 g)
Volume Solids*: 37% +/- 2%
Weight Solids*: 48% +/- 2%
Mix Ratio: One Component
Clean-up: Soap and Water

Results will vary by color, thinning and other additives.
*Product data calculated on 90-374

Drying Time:

To Touch:	1 hour
To Handle:	4 hours
To Recoat:	4 hours

Dry Time @77°F (25°C); 50% relative humidity

Pot Life: Not Applicable
In Service Temperature:
Dry Heat (F): 250° Dry Heat (C): 121°

Flash Point: Over 200°F, (93°C)

General Surface Preparation

The surface to be coated must be dimensionally stable, dry, clean, and free of oil, grease, release agents, curing compounds, and other foreign materials. The service life of the coating is directly related to the surface preparation. Where appropriate bare areas should be primed with a suitable primer. Pitt-Tech® Industrial Enamel Primers, 90-712 or 90-709, must be used on all bare metal substrates when using colors made from Midtone, Deeptone, and Deep Rustic bases. Remove and inhibit regrowth of mildew on exterior surfaces by using PPG Mildew Check® Multi-Purpose Wash, 18-1. Before use, be sure to read and follow the instructions and warnings on the label.

WARNING! If you scrape, sand, or remove old paint, you may release lead dust or fumes. LEAD IS TOXIC. EXPOSURE TO LEAD DUST OR FUMES CAN CAUSE SERIOUS ILLNESS, SUCH AS BRAIN DAMAGE, ESPECIALLY IN CHILDREN. PREGNANT WOMEN SHOULD ALSO AVOID EXPOSURE. Wear a properly fitted NIOSH-approved respirator and prevent skin contact to control lead exposure. Clean up carefully with a HEPA vacuum and a wet mop. Before you start, find out how to protect yourself and your family by contacting the USEPA National Lead Information Hotline at 1-800-424-LEAD or log on to www.epa.gov/lead. In Canada contact a regional Health Canada office. Follow these instructions to control exposure to other hazardous substances that may be released during surface preparation.

ALUMINUM: Solvent Clean per SSPC-SP1 to remove grease and oils.

FERROUS METAL: The recommended surface preparation is Commercial Blast Clean per SSPC-SP6. The minimum surface preparation is Hand Tool or Power Tool Clean per SSPC-SP2 or SP3.

GALVANIZED STEEL: Solvent Clean per SSPC-SP1 to remove grease and oils. If any oxidation (white rust) has formed, sand and remove all forms of contamination. If the galvanized has been passivated or stabilized, the surface must be abraded, i.e. Brush-Off Blast Clean per SSPC-SP7 or chemically treated.

HPC Systems in Detail Brochure (H10788)COATING SYSTEMS: 477-HD, 478-HD, 479-HD.

Recommended Primers

Concrete,Stucco,Plaster,Masonry other than CM Unit	4-603, 4-808
Concrete Masonry Units	6-15, 6-16, 16-90
Drywall	6-2, 9-900, 17-921
Exterior Wood	6-609, 17-921
Aluminum	Self priming, 6-204, 90-712
Ferrous Metal	Self priming, 6-208, 7-852, 90-712
Galvanized Steel	Self priming, 6-209, 90-712

Directions for Use

Mix thoroughly before and during use. USE WITH ADEQUATE VENTILATION. KEEP OUT OF REACH OF CHILDREN. Read all label and Material Safety Data Sheet (MSDS) information prior to use. MSDS are available through our website or by calling 1-800-441-9695.

Permissible temperatures during application:

Material:	60 to 90°F	16 to 32°C
Ambient:	50 to 100°F	10 to 38°C
Substrate:	50 to 130°F	10 to 54°C

Application Information

Recommended Spread Rates:

Wet Mils :	5.5	minimum to	8.3	maximum
Wet Microns:	140.0	minimum to	210.0	maximum
Dry Mils :	2.0	minimum to	3.0	maximum
Dry Microns:	50.8	minimum to	76.2	maximum

Application Equipment: Changes in application equipment, pressures and/or tip sizes may be required depending on ambient temperatures and application conditions. Spray equipment must be handled with due care and in accordance with manufacturer's recommendation. High-pressure injection of coatings into the skin by airless equipment may cause serious injury.

Conventional Spray: Fluid Nozzle: DeVilbiss gun, with 704 or 777 air cap with E tip and needle, or comparable equipment. Atomization Pressure: 55-75 Fluid Pressure: Cannot specify; dependant on numerous factors.

Airless Spray: 2000-2600 psi;tip 0.015-0.023" Hose dia. 1/4" max.

Brush: High Quality Polyester/Nylon Brush

Roller: 1" or 1 1/2" nap roller cover

Thinning:

Apply as received. If necessary, thin with a small amount of clean water. For additional open time and better flow and leveling during times of extremely low humidity and/or high temperatures up to 8 ounces of 90-740 Pitt-Tech Conditioner may be added per gallon of Pitt-Tech.

Packaging: 1-Gallon (3.78L) 5-Gallon (18.9L)

Not all products are available in all sizes. All containers are not full-filled.

PPGAF believes the technical data presented is currently accurate: however, no guarantee of accuracy, comprehensiveness, or performance is given or implied. Improvements in coatings technology may cause future technical data to vary from what is in this bulletin. For complete, up-to-date technical information, visit our web site or call 1-800-441-9695.

PPG Industries, Inc.
Architectural Coatings
One PPG Place
Pittsburgh, PA 15272
www.ppghpc.com

Technical Services
1-800-441-9695
1-888-807-5123 fax

Architect/Specifier
1-888-PPG-IDEA

PPG Architectural Finishes
400 S. 13th Street
Louisville, KY 40203

PPG Canada, Inc.
Architectural Coatings
4 Kenview Blvd
Brampton, ON L6T 5E4

HPC/Industrial Maintenance

Pitt-Tech® Int./Ext. Primer/Finish DTM Industrial Enamel

GENERAL DESCRIPTION

Recommended for use on properly prepared interior or exterior metal surfaces, in light to moderate industrial climates for maintenance or new construction. Use wherever an easy to use, low VOC primer is required to prepare most metal surfaces. Enhances adhesion of the final finish. Can be used as a primer under Pitt-Tech® or other PITTSBURGH® Paints topcoat products. **For Professional Use Only; Not Intended for Household Use.**

RECOMMENDED USES

Aluminum
Ferrous Metal
Galvanized Metal

FEATURES AND BENEFITS

Excellent adhesion
Low odor, low VOC primer
Easy clean up
Accepts most topcoats
Performance offsets to Federal Standards TT-P-1975, Mil-P-28577; Mil-P-53032
Meets MPI Category #107, Rust Inhibitor Primer (Water Based)
Can earn LEED NC Version 2 2 Credits

MIXING AND APPLICATIONS INFORMATION

Mix thoroughly before and during use.

Permissible temperatures during application:

Material:	60° to 90° F	15°C to 32°C
Ambient:	50° to 100° F	10°C to 38°C
Substrate:	50° to 130° F	10°C to 54°C

Application Equipment: Changes in application equipment, pressures and/or tip sizes may be required depending on ambient temperatures and application conditions.

Brush: High Quality Polyester/Nylon Brush

Roller: 3/16" - 3/4" nap roller cover

Airless Spray: Pressure 2000 - 2600 psi, tip 0.015" to .0.023"

Conventional Spray: Fluid Nozzle: DeVilbiss MBC gun, with 704 or 777 air cap with E or FF tip and needle, or comparable equipment.
Atomization Pressure: 55-70
Fluid Pressure: Can not specify, dependent on numerous factors.

Thinning: Thinning is not usually required. Excessive thinning or insufficient film thickness may cause rust staining. If rust staining occurs, apply an additional coat. Do not add oils, paint thinners, or any paint additives.

TINTING AND BASE INFORMATION

90-708	Red Inhibitive
90-709	Gray Primer
90-712	White

PRODUCT DATA

PRODUCT TYPE:	100% Acrylic Formula
GLOSS:	Flat
VOC*:	1.07 lbs./gal. (123 g/L)
COVERAGE:	208 to 312 sq. ft./gal. (19 to 29 sq. m/3.78L)

Note: Does not include loss due to varying application method, surface porosity, or mixing.

DFT:	2.0 to 3.0 mils
WEIGHT/GALLON*:	10.2 lbs.(4.6 kg)+/-0.2 lbs (91g)
VOLUME SOLIDS*:	39% +/- 2%
WEIGHT SOLIDS*:	50% +/- 2%

*Product data calculated on mixed product.

Wet Film Thickness:	5.1 to 7.7 mils
Wet Microns:	129.5 to 195.6
Dry Film Thickness:	2.0 to 3.0 mils
Dry Microns:	51 0 to 76.2
IN SERVICE TEMP.:	Dry Heat 250°F (121°C)

DRYING TIME: Dry time @77°F (25°C); 50% relative humidity.

To Touch:	1 hour
To Handle:	4 hours
To Recoat:	4 hours

Drying times listed may vary depending on temperature, humidity, color and air movement.

CLEAN UP:	Soap and Water
FLASH POINT:	Over 200°F (93°C)

PACKAGING

1-Gallon (3.78L)
5-Gallon (18.9L)

GENERAL SURFACE PREPARATION

The surface to be coated must be dimensionally stable, dry, clean, and free of oil, grease, release agents, curing compounds, and other foreign materials. The service life of the coating is directly related to the surface preparation. Where appropriate bare areas should be primed with a suitable primer. Pitt-Tech® Industrial Enamel Primers, 90-712 or 90-709, must be used on all bare metal substrates when using colors made from Pitt-Tech Finishes in Midtone, Deeptone, and Deep Rustic bases. Remove and inhibit regrowth of mildew on exterior surfaces by using Mildew Check® Multi-Purpose Wash, 18-1. Before use, be sure to read and follow the instructions and warnings on the label. WARNING! If you scrape, sand, or remove old paint, you may release lead dust or fumes. LEAD IS TOXIC. EXPOSURE TO LEAD DUST OR FUMES CAN CAUSE SERIOUS ILLNESS, SUCH AS BRAIN DAMAGE, ESPECIALLY IN CHILDREN. PREGNANT WOMEN SHOULD ALSO AVOID EXPOSURE. Wear a properly fitted NIOSH-approved respirator and prevent skin contact to control lead exposure. Clean up carefully with a HEPA vacuum and a wet mop. Before you start, find out how to protect yourself and your family by contacting the USEPA National Lead Information Hotline at 1-800-424-LEAD or log on to www.epa.gov/lead. In Canada contact a regional Health Canada office. Follow these instructions to control exposure to other hazardous substances that may be released during surface preparation.

PREVIOUSLY PAINTED SURFACES: Old coatings should be tested for adhesion of the existing system.

FERROUS METAL: Rust and other surface contaminants must be removed. Then the surface thoroughly cleaned to remove all other contaminants.

ALUMINUM: Solvent Clean per SSPC-SP1 to remove grease and oils.

GALVANIZED STEEL: Solvent Clean per SSPC-SP1 to remove grease and oils. If any oxidation (white rust) has formed, sand and remove all forms of contamination. If the galvanized has been passivated or stabilized, the surface must be abraded, i.e., Brush-Off Blast Clean per SSPC-SP7 or chemically treat the surface.

RECOMMENDED PRIMERS

None See Surface Preparation

LIMITATIONS OF USE

For Professional Use Only; Not Intended for Household Use. Apply only when air and surface temperatures are between 50°F to 100°F (38°C - 100°C) and surface temperature is at least 5°F (3°C) above the dew point. Avoid exterior painting late in the day when dew or condensation are likely to form or if rain is threatening. Two coats are required for maximum protection and durability if used as a finish coat. PROTECT FROM FREEZING. Not recommended for immersion service.

SAFETY

Proper safety procedures should be followed at all times while handling this product. USE WITH ADEQUATE VENTILATION. KEEP OUT OF REACH OF CHILDREN. Spray equipment must be handled with due care and in accordance with manufacturer's recommendation. High-pressure injection of coatings into the skin by airless equipment may cause serious injury. Read all label and Material Safety Data Sheet for important health/safety information prior to use. MSDS are available through our website www.ppghpc.com or by calling 1-800-441-9695

PPGAF believes the technical data presented is currently accurate: however, no guarantee of accuracy, comprehensiveness, or performance is given or implied. Improvements in coatings technology may cause future technical data to vary from what is in this bulletin. For complete, up-to-date technical information, visit our web site or call 1-800-441-9695

PPG Industries, Inc
Architectural Coatings
One PPG Place
Pittsburgh, PA 15272
www.ppghpc.com

Technical Services
1-800-441-9695
1-888-807-5123 fax

Architect/Specifier:
1-888-PPG-IDEA

PPG Architectural Finishes
400 S. 13th Street
Louisville, KY 40203

PPG Canada, Inc
Architectural Coatings
4 Kenview Blvd
Brampton, ON L6T 5E4

E4 6/2007
Supersedes (4/2007)

HPC/Industrial Maintenance

PITTHANE® ULTRA Gloss Urethane Enamels

Generic Type

Acrylic Aliphatic Urethane

General Description

PITTHANE® Ultra Gloss Urethane Enamels are recommended as topcoats in coating systems where color and gloss retention are primary considerations. They also provide superior chemical resistance and heat resistance.

Recommended Uses

Aluminum
Ferrous Metal
Galvanized Steel
Concrete, Stucco, Plaster, Masonry
Marine Use Above the Water

Features / Benefits

Fully 2.08 VOC compliant
Superior gloss and color retention
Mar and abrasion resistant
Superior chemical resistance
Surpasses Level 3 of SSPC-36 paint specification
Meets MPI Category #78, 2 Component Aliphatic Polyurethane, Clear
Meets MPI Category #83, 2 Component Polyurethane Non-Slip Coating

Limitations of Use

Apply only when air temperature is 40°F (4°C) or higher and when surface temperature is at least 5°F (3°C) above the dew point. The solvents contained in these products can lift some alkyd, oil based and other coatings that are not resistant to strong solvents. A test patch application is recommended. Not recommended for dimensionally unstable substrates, such as large expanses of wood, or for immersion service. Do not apply to concrete surfaces below grade or in other applications where hydrostatic pressure is present. Not intended for residential use. Color begins to change at 275°F (135°C). Drying times listed may vary depending on temperature, humidity, color and air movement. For Professional Use Only; Not Intended for Household Use.

Tinting and Base Information

These products are designed to be tinted with PERFORMACOLOR® colorants. Use formulas from the PITTHANE Ultra section of the formula book or from the PERFORMACOLOR Software. Do not tint with 96 line custom colorants.

95-8000	Neutral Base
95-8001	White Base
95-8002	Yellow Base
95-8003	Red Base
95-801	Safety Red
95-802	Safety Yellow
95-805	Safety Orange
95-812	Porcelain White
95-814	Black
95-819	Component B Catalyst

Product Data

Gloss: Gloss: +70 (20° Gloss Meter)
VOC*: 2.01 lbs/gal 241.00 g/L
Coverage: 376 to 565 sq ft/gal (35 to 52 sq. m/3.78L)
Note: Does not include loss due to varying application method, surface porosity, or mixing.
DFT: 2.0 minimum to 3.0 maximum
Weight/Gallon*: 11.6 lbs. (5.3 kg) +/- 0.3 lbs. (136 g)
Volume Solids*: 70.4% +/- 2%
Weight Solids*: 82.7% +/- 2%
Mix Ratio: 5 parts Component A to 1 part Component B
Clean-up: 97-727, 97-730, 97-734, 97-735, 97-736, 97-739 PPG Thinners

Results will vary by color, thinning and other additives.
*Product data calculated on mixed 95-812

Drying Time:

To Touch:	2 hours
To Handle:	4.5 hours
To Recoat:	4.5 hours
Accelerated Potlife:	1 hour
Accelerated Handle:	30 minutes
Accelerated Recoat:	30 minutes

Dry Time @77°F (25°C); 50% relative humidity

Pot Life: 3 hours
Induction Time: None
In Service Temperature:
Dry Heat (F): 350° Dry Heat (C): 177°

Flash Point: 95-812 84°F, (28.9°C)
95-819 331°F, (166°C)

General Surface Preparation

The surface to be coated must be dimensionally stable, dry, clean, and free of oil, grease, release agents, curing compounds, and other foreign materials. Where appropriate bare areas should be primed with a suitable primer. Job conditions may dictate the choice of an alternate primer. Consult PPG HD systems or your PPG Sales Representative if this is the case. WARNING! If you scrape, sand, or remove old paint, you may release lead dust or fumes. LEAD IS TOXIC. EXPOSURE TO LEAD DUST OR FUMES CAN CAUSE SERIOUS ILLNESS, SUCH AS BRAIN DAMAGE, ESPECIALLY IN CHILDREN. PREGNANT WOMEN SHOULD ALSO AVOID EXPOSURE. Wear a properly fitted NIOSH-approved respirator and prevent skin contact to control lead exposure. Clean up carefully with a HEPA vacuum and a wet mop. Before you start, find out how to protect yourself and your family by contacting the USEPA National Lead Information Hotline at 1-800-424-LEAD or log on to www.epa.gov/lead. In Canada contact a regional Health Canada office. Follow these instructions to control exposure to other hazardous substances that may be released during surface preparation.

PREVIOUSLY PAINTED SURFACES: Old coatings should be tested for adhesion of the existing system and lifting by the proposed topcoat.

COATING SYSTEMS: 241-HD, 242-HD, 243-HD, 245-HD, 246-HD, 247-HD, 248-HD, 249-HD.

Recommended Primers

Galvanized Steel	97-145, 97-946
Concrete, Smooth Masonry	97-145, 97-946
Ferrous Metal	97-680, 97-145, 97-946
Aluminum	97-687
See Surface Prep Section	Refer to HD Coating Systems.

Directions for Use

Mix Component "A" thoroughly before blending. (If 97-722 Accelerator is used, add it to the "A" Component and mix well prior to the addition of the "B" Component. Add up to 6 oz. of 97-722 per mixed gallon). Add Component "B" to Component "A" and mix well. A mechanical mixer is recommended. Explosion-proof equipment must be used when coating with these materials in confined areas. Keep containers closed and away from heat, sparks, and flames when not in use. USE WITH ADEQUATE VENTILATION. KEEP OUT OF REACH OF CHILDREN. Read all label and Material Safety Data Sheet (MSDS) information prior to use. MSDS are available through our website or by calling 1-800-441-9695.

Permissible temperatures during application:

Material:	60 to 90°F	16 to 32°C
Ambient:	40 to 100°F	4 to 38°C
Substrate:	40 to 140°F	4 to 60°C

Application Information

Recommended Spread Rates:

Wet Mils :	2.8	minimum to	4.3	maximum
Wet Microns:	71.1	minimum to	109.2	maximum
Dry Mils :	2.0	minimum to	3.0	maximum
Dry Microns:	50.8	minimum to	76.2	maximum

Application Equipment: Changes in application equipment, pressures and/or tip sizes may be required depending on ambient temperatures and application conditions. Spray equipment must be handled with due care and in accordance with manufacturer's recommendation. High-pressure injection of coatings into the skin by airless equipment may cause serious injury.

Conventional Spray: Fluid Nozzle: DeVilbiss MBC gun, with 777 or 78 air cap with E or F tip and needle, or comparable equipment. Atomization Pressure: 55 - 70 Fluid Pressure: (Can not specify, dependent on numerous factors)

Airless Spray: Pressure 1800 psi, tip 0.013" - 0.015"

Brush: High Quality Natural Bristle Brush

Roller: 3/8" nap solvent resistant core

Thinning:

For a 2.8 lb/gal (340 g/L) VOC, do not exceed 15% thinning. Use 97-739 to obtain a 2.08 (250 g/L) VOC. Use 97-739 for normal application. 97-735 thinner can be added for normal brush, roll, or spray application. Use 97-736 for a faster solvent. 97-735 and 97-736 increase the conductivity of the mixed paint. May use 97-730 or 97-727 for spray, 97-734 for brush or roller.

Packaging: 1-Gallon (3.78L) 5-Gallon (18.9L) Quart (946 mL)

Not all products are available in all sizes. All containers are not full-filled.

PPGAF believes the technical data presented is currently accurate: however, no guarantee of accuracy, comprehensiveness, or performance is given or implied. Improvements in coatings technology may cause future technical data to vary from what is in this bulletin. For complete, up-to-date technical information, visit our web site or call 1-800-441-9695.

PPG Industries, Inc.
Architectural Coatings
One PPG Place
Pittsburgh, PA 15272
www.ppghpc.com

Technical Services
1-800-441-9695
1-888-807-5123 fax

Architect/Specifier
1-888-PPG-IDEA

PPG Architectural Finishes
400 S. 13th Street
Louisville, KY 40203

PPG Canada, Inc.
Architectural Coatings
4 Kenview Blvd
Brampton, ON L6T 5E4

HPC/Industrial Maintenance **PITT-GUARD® Direct-To-Rust Epoxy Mastic Coatings**

Generic Type

Polyamide-Epoxy Two Component

General Description

Pitt-Guard DTR products are intended for use where one coat high build barrier type protection is required for properly prepared metal substrates such as steel, aluminum or hot dipped galvanized steel and for use on properly prepared masonry. Their excellent wetting properties allow application and good performance over tightly adhering rust.

Recommended Uses

Aluminum
Drywall
Ferrous Metal
Galvanized Steel
Wood
Concrete, Stucco, Plaster, Masonry
CMU
Marine Use Above the Water

Features / Benefits

Barrier coat corrosion protection
Excellent adhesion to minimally prepared surfaces
Tintable to hundreds of colors with the computerized PerformaColor system
No topcoat needed for corrosion protection
Ready Mixed Colors for immersion service

Limitations of Use

For Professional Use Only; Not Intended for Household Use. Apply only when material temperature is above 60ºF (15ºC) and air and surface temperatures are above 50°F (10°C) and surface temperature is at least 5°F (3°C) above the dew point. Avoid exterior painting late in the day when dew or condensation are likely to form or when rain is threatening. Not recommended for use in swimming pools or with alkyd-oil top coats. Hot rolled steel should be prepared by abrasive blast cleaning whenever possible. The inherent nature of the chemistry of this product causes the film to yellow. This yellowing process continues as the film ages and may vary with application conditions. This yellowing process does not detract from coating performance. These products also lose gloss and chalk on exterior exposure, but film integrity is not affected. Drying times listed may vary depending on temperature, humidity color and air movement.

Tinting and Base Information

These products are designed to be tinted with colorants of the PerformaColor System. Use formulas from the PerformaColor® System Software. DO NOT TINT WITH 96 LINE CUSTOM COLORANTS.

97-144	Black
97-145	Porcelain White
97-147	Beige
97-148	Gray
97-149	Ready Mix Component B
97-1500	Neutral Base
97-1512	White Base
97-158	Tint Base Component B

Product Data

Gloss:	Semi-Gloss:Typically 25 to 55 (60°Gloss Meter)
VOC*:	1.07 lbs/gal 128.00 g/L
Coverage:	195 to 340 sq ft/gal (18 to 31 sq. m/3.78L)

Note: Does not include loss due to varying application method, surface porosity, or mixing.

DFT:	4.0 minimum to 7.0 maximum
Weight/Gallon*:	12.4 lbs. (5.6 kg) +/- 0.4 lbs. (182 g)
Volume Solids*:	84.9% +/- 2%
Weight Solids*:	91.4% +/- 2%
Mix Ratio:	1 part Component A to 1 part Component B
Clean-up:	97-725,97-727,97-734 PPG Thinners

Results will vary by color, thinning and other additives.
*Product data calculated on mixed 97-145

Drying Time:

To Touch:	8 hours
To Handle:	16 hours
To Recoat:	16 hours
Accelerated Recoat:	9 hours

Dry Time @77°F (25°C); 50% relative humidity

Pot Life:	4 hours
Induction Time:	30 minutes
Flash Point:	97-145 106°F, (41.1°C) 97-149 164°F, (73.3°C)

General Surface Preparation

The surface to be coated must be dry, clean, and free of oil, grease, release agents, curing compounds, and other foreign materials. The service life of the coating is directly related to the surface preparation. WARNING! If you scrape, sand, or remove old paint, you may release lead dust or fumes. LEAD IS TOXIC. EXPOSURE TO LEAD DUST OR FUMES CAN CAUSE SERIOUS ILLNESS, SUCH AS BRAIN DAMAGE, ESPECIALLY IN CHILDREN. PREGNANT WOMEN SHOULD ALSO AVOID EXPOSURE. Wear a properly fitted NIOSH-approved respirator and prevent skin contact to control lead exposure. Clean up carefully with a HEPA vacuum and a wet mop. Before you start, find out how to protect yourself and your family by contacting the USEPA National Lead Information Hotline at 1-800-424-LEAD or log on to www.epa.gov/lead. In Canada contact a regional Health Canada office. Follow these instructions to control exposure to other hazardous substances that may be released during surface preparation.

FERROUS METAL: Non-Immersion = SSPC-SP2, Immersion = SSPC-SP10

GALVANIZED STEEL: Remove grease and oils with a quality paint thinner or naphtha. If any oxidation (white rust) has formed, thoroughly sand and remove all forms of contamination. If the galvanized steel has been passivated or treated, the surface must be abraded to some degree and remove all forms of contamination.

ALUMINUM: SSPC-SP1, then SSPC-SP7

CONCRETE, STUCCO, PLASTER, MASONRY other than CMU: Allow all concrete, mortar, plaster, etc. to cure for thirty (30) days under normal drying conditions. Remove all dirt, dust, grime, loose mortar and all other forms of contamination. Concrete which has been treated with curing compounds or hardeners, needs to be thoroughly abraded. (Concrete needs to be Acid Etched)

CONCRETE MASONRY UNITS: Allow the mortar to cure for thirty (30) days under normal drying conditions. Remove all contamination.

WOOD: Sand in order to remove surface roughness and loose wood fibers. Remove any sap, then spot prime with the appropriate primer to seal any knots and sap stain before applying the regular primer. Countersink all nail holes. Spot prime nail heads and putty all cracks after the prime coat is dry. Remove grease and oils with a high quality paint thinner or naphtha.

Recommended Primers

Concrete Masonry Units	16-90, 97-685/97-686, 95-217
Galvanized Steel	Self Priming
Aluminum	Self Priming
Wood and Hardboard	Self Priming
Concrete,Stucco,Plaster,Masonry other than CM Unit	Self Priming
Drywall	Self Priming
Ferrous Metal	Self Priming

Directions for Use

Mix both components thoroughly before blending. (If 97-723 Accelerator is used, add it to "A" Component and mix well prior to the addition of "B" Component.) Add Component "B" to Component "A" and blend well using a mechanical mixer. Bases require a 30 minute digestion time. Use of material below 60ºF (15.5ºC) requires a 60 minute digestion time and is not recommended. Be sure to mix the correct A and B components. Explosion-proof equipment must be used when coating with these materials in confined areas. Keep containers closed and away from heat, sparks, and flames when not in use. Read all label and Material Safety Data Sheet (MSDS) information prior to use. MSDS are available through our website or by calling 1-800-441-9695.

Permissible temperatures during application:

Material:	60 to 90°F	15 to 32°C
Ambient:	50 to 100°F	10 to 38°C
Substrate:	50 to 130°F	10 to 54°C

Application Information

Recommended Spread Rates:

Wet Mils :	4.7	minimum to	8.2	maximum
Wet Microns:	119.0	minimum to	208.0	maximum
Dry Mils :	4.0	minimum to	7.0	maximum
Dry Microns:	102.0	minimum to	178.0	maximum

Application Equipment: Changes in application equipment, pressures and/or tip sizes may be required depending on ambient temperatures and application conditions. Spray equipment must be handled with due care and in accordance with manufacturer's recommendation. High-pressure injection of coatings into the skin by airless equipment may cause serious injury.

Conventional Spray: Fluid Nozzle: DeVilbiss MBC-510 or JGA gun, with 704 or 777 air cap with E tip and needle, or comparable equipment. Atomization Pressure: 55 - 70 Fluid Pressure: Can not specify, dependent on numerous factors.

Airless Spray: Pressure 1500 psi, tip 0.017" - 0.021"

Brush: Polyester/Nylon Brush

Roller: 3/8" nap solvent resistant core

Thinning:

Add reducer prior to digestion and re-stir before use. When 97-725 causes lifting; 97-727 may be used when substrate temperature is below 100ºF (37.7ºC) resulting in a shorter pot life. For 2.08 lbs/gal VOC, thin up to 19% with 97-725. Conventional Spray: up to 32 oz./gallon with 97-725. Airless Spray: up to 25 oz./gallon with 97-725. Brush: up to 25 oz./gallon with 97- 734. Roller: up to 25 oz./gallon with 97-734

Packaging: 1-Gallon (3.78L) 5-Gallon (18.9L)

Not all products are available in all sizes. All containers are not full-filled.

PPGAF believes the technical data presented is currently accurate: however, no guarantee of accuracy, comprehensiveness, or performance is given or implied. Improvements in coatings technology may cause future technical data to vary from what is in this bulletin. For complete, up-to-date technical information, visit our web site or call 1-800-441-9695.

PPG Industries, Inc.
Architectural Coatings
One PPG Place
Pittsburgh, PA 15272
www.ppghpc.com

Technical Services
1-800-441-9695
1-888-807-5123 fax

Architect/Specifier
1-888-PPG-IDEA

PPG Architectural Finishes
400 S. 13th Street
Louisville, KY 40203

PPG Canada, Inc.
Architectural Coatings
4 Kenview Blvd
Brampton, ON L6T 5E4

HPC/Industrial Maintenance

AQUAPON® WB Water Base Epoxy

GENERAL DESCRIPTION

AQUAPON® WB is a water-borne epoxy interior/exterior coating system for use in commercial, institutional or industrial environments or where a tough, impact, abrasion, mar and stain resistant coating is required. Suitable for use on properly prepared and primed steel, galvanized metal, aluminum, copper, plaster, concrete, masonry, and wood surfaces. Also recommended as a floor coating.

RECOMMENDED SUBSTRATES / PROJECTS

Aluminum	Ferrous Metal	Wood
Concrete	Galvanized Steel	
Drywall	Plaster	

APPLICATION INFORMATION

Application Equipment: Changes in application equipment, pressures and/or tip sizes may be required depending on ambient temperatures and application conditions.

Conventional Spray: Fluid Nozzle: DeVilbiss MBC gun, with 704 or 777 air cap with "F" tip and needle, or comparable equipment. Atomization Pressure: 55-70 psi. Fluid Pressure: Can not specify dependent on numerous factors.

Airless Spray: Pressure: 1500 psi, tip 0.015" - 0.017" Spray equipment must be handled with due care and in accordance with manufacturer's recommendations. High pressure injection of coatings into the skin by airless equipment may cause serious injury.

Brush: High quality polyester/nylon brush
Roller: High quality roller cover
Thinning: Under normal conditions, thinning is not required. In some cases, such as extremely low humidity or high temperatures, water may be added up to 6 oz. per gallon to improve open time or flow and leveling.
Permissible temperatures during application:

Material:	50 to 90ºF	10 to 32ºC
Ambient:	50 to 100ºF	10 to 38ºC
Substrate:	50 to 130ºF	10 to 54ºC

FEATURES AND BENEFITS

Water-borne formula meets all national VOC regulations.
Chemical and solvent resistance equal to solvent epoxy coatings.
Superior abrasion resistance.
Suitable for both floors and vertical surfaces.
Water borne formula for low odor and reduced yellowing.
Meets MPI Category #93, Epoxy Floor Paint (Water Based)

DIRECTIONS FOR USE

Tint Component A only. Thoroughly mix the contents of each component before combining. Under mechanical agitation, add the contents of Comp. B to the correct Comp. A. The mixed material will increase in viscosity. Agitate until the combined material is uniform. No digestion time is required. Be sure to mix the correct A and B components.

PRODUCT DATA

PRODUCT TYPE: Water Borne Epoxy Two Component

BASE/COLOR:

98-1	Porcelain White	98-4	ASA #49 Gray
98-10	Safety Red	98-9	Tile Red
98-11	Safety Blue	98-51	Pastel Blue
98-12	Safety Orange	98-56	Midtone Base
98-13	Safety Yellow	98-98	Gloss Comp. B
98-2	Black	98-100	Semi-Gloss Comp. B
98-3	Light Gray	98-101	Gloss Comp.B (low VOC)

	GLOSS*	SEMI-GLOSS**
Gloss Level: (60º Gloss meter)	**70 +**	**40-60**
VOC:	2.26 lbs/gal. (271 g/L)* 2.08 lbs/gal. (250 g/L)***	2.02 lbs./gal. (242 g/L)
Coverage:	202 to 303 sq. ft./gal (19 to 28 sq. m/3.78L)	227 to 341 sq. ft./gal (21 to 32 sq. m/3.78L)
Volume Solids:	37.8 +/- 2%	42.5 +/- 2%
Weight Solids:	51.8% +/- 2%	58.2% +/- 2%
Weight/Gallon:	10.5 lbs. (4.8 kg) +/- 0.3 lbs. (136g)	11.15 lbs. (5.07 kg) +/- 0.3 lbs. (136 g)

Note: Coverage does not include loss due to varying application method, surface porosity, or mixing

Wet Film Thickness:	5.3 mils to 7.9 mils*
Wet Microns:	135 to 201
Dry Film Thickness:	2.0 mils to 3.0 mils
Dry Microns:	51 to 76

POT LIFE: 6 hours
INDUCTION TIME: None

DRYING TIME: Dry time @77ºF (25ºC); 50% relative humidity.

To Touch:	1 hour
To Handle:	7 hours
To Recoat:	16 hours

Drying times listed may vary depending on temperature, humidity, color and air movement.

CLEAN UP: Soap and Water

FLASH POINT:

98-1	94ºF (34ºC)
98-98	200ºF (93ºC)
98-100	200ºF (93ºC)

Results will vary by color, thinning and other additives.
*Product data calculated on product 98-1 mixed with 98-98.
**Product data calculated on 98-1 mixed with 98-100.
***Product data calculated on 98-1 mixed with 98-101.

GENERAL SURFACE PREPARATION

The surface to be coated must be dimensionally stable, dry, clean, and free of oil, grease, release agents, curing compounds, and other foreign materials. Prime bare areas with a suitable primer. WARNING! If you scrape, sand, or remove old paint, you may release lead dust or fumes. LEAD IS TOXIC. EXPOSURE TO LEAD DUST OR FUMES CAN CAUSE SERIOUS ILLNESS, SUCH AS BRAIN DAMAGE, ESPECIALLY IN CHILDREN. PREGNANT WOMEN SHOULD ALSO AVOID EXPOSURE. Wear a properly fitted NIOSH-approved respirator and prevent skin contact to control lead exposure. Clean up carefully with a HEPA vacuum and a wet mop. Before you start, find out how to protect yourself and your family by contacting the USEPA National Lead Information Hotline at 1-800-424-LEAD or log on to www.epa.gov/lead. In Canada contact a regional Health Canada office. Follow these instructions to control exposure to other hazardous substances that may be released during surface preparation.

PREVIOUSLY PAINTED SURFACES: Old coatings should be tested for adhesion of the existing system and lifting by the proposed topcoat.

FERROUS METAL: Stabilizers must be removed prior to painting. Weathering , solvent washing, chemical cleaning, or brush blasting may be appropriate, depending upon the nature of the stabilizer and the time available.

GALVANIZED STEEL: Caution must be used when selecting coatings for use on galvanized metal surfaces. These substrates may have a factory-applied stabilizer, which is used to prevent white rusting during storage and shipping. Such Stabilizers must be removed by either brush blasting or chemical treatment. The surface must be exterior weathered for 6 months and then solvent cleaned per SSPC-SP1 prior to painting. When weathering is not possible, solvent clean surface per SSPC-SP1 and then blast clean per SSPC-SP7, brush off blast or thoroughly abrade the surface by appropriate means.

CONCRETE FLOORS: Unpainted -- Test freshly poured concrete by ASTM-D4263 before coating. Remove all contaminants by sweeping, scraping, or cleaning with solvent or detergents. In severely contaminated areas, abrasive blasting may be necessary. Previously Painted -- Existing polyamide/epoxy coatings in good condition can be coated. Previous coatings must be thoroughly cleaned and sanded to remove gloss. Remove wax and grease with solvent and detergent. In severely contaminated areas abrasive blasting may be necessary.

CONCRETE, STUCCO, PLASTER, MASONRY other than Concrete Masonry Units: Allow all concrete, mortar, plaster, etc. to cure for thirty (30) days under normal drying conditions. Remove all dirt, dust, grime, loose mortar and all other forms of contamination. Concrete which has been treated with curing compounds or hardeners, should be thoroughly abraded.

MASONRY, PLASTER, DRYWALL, CEMENTBOARD, CONCRETE BLOCK: Remove all surface contaminants. Fill cracks, voids, and surface imperfections. Use PITT-GLAZE® Acrylic Latex Block Filler, 16-90, for normal applications. For non-immersion service involving moisture or high humidity, 97-685/686, Epoxy Filler is recommended. HPC Systems in Detail Brochure (H13905) COATING SYSTEMS: 236-HD, 237-HD, 238-HD, 239-HD. AQUAPON® WB Epoxy Coatings may be substituted for AQUAPON® Polyamide-Epoxy Coatings, 97 Line, in other AQUAPON® Coating Systems when the end use does not involve a critical exposure.

WOOD: Previously painted wood should be sanded to dull the gloss of previous paint and to remove any loose paint. Wood should be clean and dry before the first application of AQUAPON® WB Epoxy Coating.

LIMITATIONS OF USE

Apply only when air, surface and product temperatures are above 50°F (10°C) and when temperatures are at least 5°F (3°C) above the dew point. Curing is retarded below 60°F (15°C). For exterior applications, do not paint late in the day when dew or condensation are likely to form or if rain is anticipated. Gradual loss of gloss and chalking is typical and characteristic of epoxies on exterior exposures. Film integrity is not adversely affected. Do not apply over oil or alkyd coatings less than six months old. Not recommended for immersion service or for use in swimming pools. Not recommended for below grade applications on concrete or masonry or over latex floor deck enamels.. Do not apply directly over POLY-CLUTCH® Wash Primer, 97-687/97-688. Epoxy coatings are not suitable for large expanses of exterior wood. For Professional Use Only; Not Intended for Household Use. PROTECT FROM FREEZING. Explosion-proof equipment must be used when coating with these materials in confined areas. Keep containers closed and away from heat, sparks, and flames when not in use.

PACKAGING

1-Gallon (3.78L)
5-Gallon (18.9L)
All products not available in all sizes. All containers are not full-filled.

RECOMMENDED PRIMERS

Concrete Block	16-90, 97-685/686, 6-15
Concrete, Smooth Masonry	4-603, 98-1
Drywall	6-2, 17-921, Self Priming
Ferrous Metal	98-46
Galvanized Steel	98-46

TINTING AND BASE INFORMATION

Use PITTSBURGH® Paints Custom Colorants and refer to the VOICE OF COLOR® formula book for tinting instructions. Do not use G or Z colorants. Tint Component A only.

SAFETY

Proper safety procedures should be followed at all times while handling this product. USE WITH ADEQUATE VENTILATION. KEEP OUT OF REACH OF CHILDREN. Read all label and Material Safety Data Sheet for important health/safety information prior to use. MSDS are available through our website www.ppghpc.com or by calling 1-800-441-9695.

PPGAF believes the technical data presented is currently accurate: however, no guarantee of accuracy, comprehensiveness, or performance is given or implied. Improvements in coatings technology may cause future technical data to vary from what is in this bulletin. For complete, up-to-date technical information, visit our web site or call 1-800-441-9695.

PPG Industries, Inc.
Architectural Coatings
One PPG Place
Pittsburgh, PA 15272
www.ppghpc.com

Technical Services
1-800-441-9695
1-888-807-5123 fax

Architect/Specifier:
1-888-PPG-IDEA

PPG Architectural Finishes
400 S. 13th Street
Louisville, KY 40203

PPG Canada, Inc.
Architectural Coatings
4 Kenview Blvd
Brampton, ON L6T 5E4

F19 10/2006
Supersedes (5/2006)

Material Safety Data Sheet

Date of issue 8 March 2011
Version 5

1 . Product and company identification

Product name : SUPERTECH INT DRY-FOG EGGSHELL

Code : 6-151XI

Supplier : PPG Industries, Inc.
One PPG Place
Pittsburgh, PA 15272

Emergency telephone number : (412) 434-4515 (U.S.)
(514) 645-1320 (Canada)
01-800-00-21-400 (Mexico)

Technical Phone Number : 1-800-441-9695 (8:00 am to 5:00 pm EST)

2 . Hazards identification

Emergency overview : DANGER!

COMBUSTIBLE LIQUID AND VAPOR. CAUSES RESPIRATORY TRACT IRRITATION. MAY BE HARMFUL IF INHALED OR SWALLOWED. SANDING AND GRINDING DUSTS MAY BE HARMFUL IF INHALED. ASPIRATION HAZARD. CAN ENTER LUNGS AND CAUSE DAMAGE. MAY CAUSE EYE IRRITATION. PROLONGED OR REPEATED CONTACT MAY DRY SKIN AND CAUSE IRRITATION. CONTAINS MATERIAL THAT CAN CAUSE TARGET ORGAN DAMAGE. CANCER HAZARD - CONTAINS MATERIAL WHICH CAN CAUSE CANCER.

Keep away from heat, sparks and flame. Do not swallow. Avoid breathing vapor or mist. Avoid contact with eyes, skin and clothing. Use only with adequate ventilation. Keep container tightly closed and sealed until ready for use. Wash thoroughly after handling.

Potential acute health effects

Inhalation : May be harmful if inhaled. Irritating to respiratory system. Can irritate eyes, nose, mouth and throat.

Ingestion : May be harmful if swallowed. Aspiration hazard if swallowed. Can enter lungs and cause damage.

Skin : May cause skin dryness and irritation.

Eyes : Moderately irritating to eyes.

Over-exposure signs/symptoms

Repeated exposure to high vapor concentrations may cause irritation of the respiratory system and permanent brain and nervous system damage. Inhalation of vapor/aerosol concentrations above the recommended exposure limits causes headaches, drowsiness and nausea and may lead to unconsciousness or death. There is some evidence that repeated exposure to organic solvent vapors in combination with constant loud noise can cause greater hearing loss than expected from exposure to noise alone. This product contains crystalline silica which can cause lung cancer or silicosis. The risk of cancer depends on the duration and level of exposure to dust from sanding surfaces or mist from spray applications.

Medical conditions aggravated by over-exposure : Pre-existing disorders involving any target organs mentioned in this MSDS as being at risk may be aggravated by over-exposure to this product.

This Material Safety Data Sheet has been prepared in accordance with Canada's Workplace Hazardous Materials Information System (WHMIS) and the OSHA Hazard Communication Standard (29 CFR 1910.1200).

See toxicological information (Section 11)

Powered by ATRION

3 . Composition/information on ingredients

Name	CAS number	%
Limestone	1317-65-3	30 - 60
Naphtha (petroleum), hydrotreated heavy	64742-48-9	10 - 30
Titanium dioxide	13463-67-7	7 - 13
Naphtha (petroleum), heavy alkylate	64741-65-7	1 - 5
Quartz (SiO2) (<10 microns)	14808-60-7	0.1 - 1
2-butanone oxime	96-29-7	0.1 - 1

There are no additional ingredients present which, within the current knowledge of the supplier and in the concentrations applicable, are classified as hazardous to health or the environment and hence require reporting in this section.

4 . First aid measures

If ingestion, irritation, any type of overexposure or symptoms of overexposure occur during or persists after use of this product, contact a POISON CONTROL CENTER, EMERGENCY ROOM OR PHYSICIAN immediately; have Material Safety Data Sheet information available. Never give anything by mouth to an unconscious or convulsing person.

Eye contact : Check for and remove any contact lenses. Immediately flush eyes with running water for at least 15 minutes, keeping eyelids open. Seek immediate medical attention.

Skin contact : Remove contaminated clothing and shoes. Wash skin thoroughly with soap and water or use recognized skin cleanser. Do NOT use solvents or thinners.

Inhalation : Remove to fresh air. Keep person warm and at rest. If not breathing, if breathing is irregular or if respiratory arrest occurs, provide artificial respiration or oxygen by trained personnel.

Ingestion : If swallowed, seek medical advice immediately and show this container or label. Keep person warm and at rest. Do not induce vomiting.

Notes to physician : No specific treatment. Treat symptomatically. Contact poison treatment specialist immediately if large quantities have been ingested or inhaled.

5 . Fire-fighting measures

Flammability of the product : Combustible liquid. In a fire or if heated, a pressure increase will occur and the container may burst, with the risk of a subsequent explosion. Vapors may accumulate in low or confined areas or travel a considerable distance to a source of ignition and flash back.

Extinguishing media

Suitable : Use dry chemical, CO_2, water spray (fog) or foam.

Not suitable : Do not use water jet.

Special exposure hazards : Promptly isolate the scene by removing all persons from the vicinity of the incident if there is a fire. No action shall be taken involving any personal risk or without suitable training. Move containers from fire area if this can be done without risk. Use water spray to keep fire-exposed containers cool. Fire water contaminated with this material must be contained and prevented from being discharged to any waterway, sewer or drain.

Hazardous combustion products : Decomposition products may include the following materials:
carbon oxides
metal oxide/oxides

Special protective equipment for fire-fighters : Fire-fighters should wear appropriate protective equipment and self-contained breathing apparatus (SCBA) with a full face-piece operated in positive pressure mode.

6 . Accidental release measures

Personal precautions : No action shall be taken involving any personal risk or without suitable training. Evacuate surrounding areas. Keep unnecessary and unprotected personnel from entering. Do not touch or walk through spilled material. Shut off all ignition sources. No flares, smoking or flames in hazard area. Avoid breathing vapor or mist. Provide adequate ventilation. Wear appropriate respirator when ventilation is inadequate. Put on appropriate personal protective equipment (see Section 8).

Powered by ATRION

6 . Accidental release measures

Environmental precautions : Avoid dispersal of spilled material and runoff and contact with soil, waterways, drains and sewers. Inform the relevant authorities if the product has caused environmental pollution (sewers, waterways, soil or air). Water polluting material. May be harmful to the environment if released in large quantities.

Large spill : Stop leak if without risk. Move containers from spill area. Approach release from upwind. Use spark-proof tools and explosion-proof equipment. Prevent entry into sewers, water courses, basements or confined areas. Wash spillages into an effluent treatment plant or proceed as follows. Contain and collect spillage with non-combustible, absorbent material e.g. sand, earth, vermiculite or diatomaceous earth and place in container for disposal according to local regulations (see section 13). Dispose of via a licensed waste disposal contractor. Contaminated absorbent material may pose the same hazard as the spilled product. Note: see section 1 for emergency contact information and section 13 for waste disposal.

Small spill : Stop leak if without risk. Move containers from spill area. Use spark-proof tools and explosion-proof equipment. Dilute with water and mop up if water-soluble or absorb with an inert dry material and place in an appropriate waste disposal container. Dispose of via a licensed waste disposal contractor.

7 . Handling and storage

Handling : Materials such as cleaning rags, paper wipes and protective clothing, which are contaminated with the product may spontaneously self-ignite. To avoid the risks of fires, all contaminated materials should be placed in a metal container filled with water and sealed. Contaminated materials should be removed from the workplace at the end of each working day and be stored outside. Put on appropriate personal protective equipment (see Section 8). Eating, drinking and smoking should be prohibited in areas where this material is handled, stored and processed. Do not swallow. Do not get in eyes or on skin or clothing. Avoid breathing vapor or mist. Avoid release to the environment. Use only with adequate ventilation. Wear appropriate respirator when ventilation is inadequate. Do not enter storage areas and confined spaces unless adequately ventilated. Keep in the original container or an approved alternative made from a compatible material, kept tightly closed when not in use. Store and use away from heat, sparks, open flame or any other ignition source. Use explosion-proof electrical (ventilating, lighting and material handling) equipment. Use non-sparking tools. Take precautionary measures against electrostatic discharges. Vapors are heavier than air and may spread along floors. To avoid fire or explosion, dissipate static electricity during transfer by grounding and bonding containers and equipment before transferring material. Empty containers retain product residue and can be hazardous. Do not reuse container. If this material is part of a multiple component system, read the Material Safety Data Sheet(s) for the other component or components before blending as the resulting mixture may have the hazards of all of its parts.

Storage : Store in accordance with local regulations. Store in a segregated and approved area. Store in original container protected from direct sunlight in a dry, cool and well-ventilated area, away from incompatible materials (see section 10) and food and drink. Eliminate all ignition sources. Separate from oxidizing materials. Keep container tightly closed and sealed until ready for use. Containers that have been opened must be carefully resealed and kept upright to prevent leakage. Do not store in unlabeled containers. Use appropriate containment to avoid environmental contamination. Do not store above the following temperature: 120F / 49C.

8 . Exposure controls/personal protection

Name	Result	ACGIH	OSHA	Ontario	Mexico	PPG

Powered by ATRION

8 . Exposure controls/personal protection

Limestone	TWA STEL	Not established Not established	5 mg/m³ R 15 mg/m³ TD Not established	Not established Not established	10 mg/m³ 20 mg/m³	Not established Not established
Titanium dioxide	TWA STEL	10 mg/m³ Not established	15 mg/m³ TD Not established	10 mg/m³ TD Not established	10 mg/m³ (as Ti) 20 mg/m³ (as Ti)	Not established Not established
Quartz (SiO2) (<10 microns)	TWA	0.025 mg/m³ R	10 mg/m³ R Z 30 mg/m³ TD Z 250 mppcf R Z	0.1 mg/m³ R	0.1 mg/m³ R	Not established
2-butanone oxime	TWA STEL	Not established Not established	Not established Not established	Not established Not established	Not established Not established	3 ppm 10 ppm

Key to abbreviations

A	=	Acceptable Maximum Peak	S	=	Potential skin absorption
ACGIH	=	American Conference of Governmental Industrial Hygienists.	SR	=	Respiratory sensitization
C	=	Ceiling Limit	SS	=	Skin sensitization
F	=	Fume	STEL	=	Short term Exposure limit values
IPEL	=	Internal Permissible Exposure Limit	TD	=	Total dust
OSHA	=	Occupational Safety and Health Administration.	TLV	=	Threshold Limit Value
R	=	Respirable	TWA	=	Time Weighted Average
Z	=	OSHA 29CFR 1910.1200 Subpart Z - Toxic and Hazardous Substances			

Consult local authorities for acceptable exposure limits.

Recommended monitoring procedures : If this product contains ingredients with exposure limits, personal, workplace atmosphere or biological monitoring may be required to determine the effectiveness of the ventilation or other control measures and/or the necessity to use respiratory protective equipment.

Engineering measures : Use only with adequate ventilation. Use process enclosures, local exhaust ventilation or other engineering controls to keep worker exposure to airborne contaminants below any recommended or statutory limits. The engineering controls also need to keep gas, vapor or dust concentrations below any lower explosive limits. Use explosion-proof ventilation equipment.

Hygiene measures : Wash hands, forearms and face thoroughly after handling chemical products, before eating, smoking and using the lavatory and at the end of the working period. Appropriate techniques should be used to remove potentially contaminated clothing. Wash contaminated clothing before reusing. Ensure that eyewash stations and safety showers are close to the workstation location.

Personal protection

Eyes : Safety glasses with side shields.

Hands : Chemical-resistant, impervious gloves complying with an approved standard should be worn at all times when handling chemical products if a risk assessment indicates this is necessary.

Gloves : For prolonged or repeated handling, use the following type of gloves:

Recommended: nitrile rubber, foil, fluor rubber

Respiratory : If workers are exposed to concentrations above the exposure limit, they must use appropriate, certified respirators. Use a properly fitted, air-purifying or air-fed respirator complying with an approved standard if a risk assessment indicates this is necessary. Respirator selection must be based on known or anticipated exposure levels, the hazards of the product and the safe working limits of the selected respirator.

Powered by ATRION

8 . Exposure controls/personal protection

Skin : Personal protective equipment for the body should be selected based on the task being performed and the risks involved and should be approved by a specialist before handling this product.

Environmental exposure controls : Emissions from ventilation or work process equipment should be checked to ensure they comply with the requirements of environmental protection legislation. In some cases, fume scrubbers, filters or engineering modifications to the process equipment will be necessary to reduce emissions to acceptable levels.

9 . Physical and chemical properties

Physical state : Liquid.
Flash point : Closed cup: 41.67°C (107°F)
Explosion limits : Lower: 0.8%
Color : Not available.
Odor : Not available.
pH : Not available.
Boiling/condensation point : >37.78°C (>100°F)
Melting/freezing point : Not available.
Specific gravity : 1.49
Density (lbs / gal) : 12.43
Vapor pressure : 0.013 kPa (0.1 mm Hg) [20°C]
Vapor density : Not available.
Volatility : 51% (v/v), 25.85% (w/w)
Odor threshold : Not available.
Evaporation rate : 0 (butyl acetate = 1)
Partition coefficient: n-octanol/water : Not available.
% Solid. (w/w) : 74.15

10 . Stability and reactivity

Stability : Stable under recommended storage and handling conditions (see section 7).
Conditions to avoid : Avoid all possible sources of ignition (spark or flame). Do not pressurize, cut, weld, braze, solder, drill, grind or expose containers to heat or sources of ignition.
Materials to avoid : Reactive or incompatible with the following materials:,acids,oxidizing materials,strong alkalis
Hazardous decomposition products : Under normal conditions of storage and use, hazardous decomposition products should not be produced.
Hazardous polymerization : Under normal conditions of storage and use, hazardous polymerization will not occur.

11 . Toxicological information

Acute toxicity

Product/ingredient name	Result	Species	Dose	Exposure
Naphtha (petroleum), hydrotreated heavy	LD50 Oral	Rat	>6 g/kg	-
	LC50 Inhalation	Rat	8500 mg/m3	4 hours
Titanium dioxide	LD50 Oral	Rat	>10 g/kg	-
2-butanone oxime	LD50 Oral	Rat	930 mg/kg	-
	LD50 Dermal	Rabbit	200 uL/kg	-

Chronic toxicity

Conclusion/Summary : Not available.

Powered by ATRION

11 . Toxicological information

Defatting irritant? : Prolonged or repeated contact can defat the skin and lead to irritation, cracking and/or dermatitis.

Target organs : Contains material which causes damage to the following organs: brain, central nervous system (CNS).
Contains material which may cause damage to the following organs: lungs, upper respiratory tract, skin, eyes.

Carcinogenicity

Carcinogenicity : Contains material which can cause cancer. Risk of cancer depends on duration and level of exposure.

Classification

Product/ingredient name	ACGIH	IARC	EPA	NIOSH	NTP	OSHA
Titanium dioxide	A4	2B	-	-	-	-
Quartz (SiO2) (<10 microns)	A2	1	-	+	Proven.	-

Mutagenicity

Mutagenicity : No known significant effects or critical hazards.

Teratogenicity

Teratogenicity : No known significant effects or critical hazards.

Reproductive toxicity

Developmental effects : No known significant effects or critical hazards.

Fertility effects : No known significant effects or critical hazards.

12 . Ecological information

Environmental effects : Water polluting material. May be harmful to the environment if released in large quantities.

Aquatic ecotoxicity

Product/ingredient name	Result	Species	Exposure
Titanium dioxide	Acute EC50 >1000000 ug/L Fresh water	Daphnia - Water flea - Daphnia magna	48 hours
2-butanone oxime	Acute LC50 843000 to 914000 ug/L Fresh water	Fish - Fathead minnow - Pimephales promelas	96 hours

13 . Disposal considerations

Waste disposal : The generation of waste should be avoided or minimized wherever possible. Significant quantities of waste product residues should not be disposed of via the foul sewer but processed in a suitable effluent treatment plant. Dispose of surplus and non-recyclable products via a licensed waste disposal contractor. Disposal of this product, solutions and any by-products should at all times comply with the requirements of environmental protection and waste disposal legislation and any regional local authority requirements. Waste packaging should be recycled. Incineration or landfill should only be considered when recycling is not feasible. This material and its container must be disposed of in a safe way. Care should be taken when handling emptied containers that have not been cleaned or rinsed out. Empty containers or liners may retain some product residues. Vapor from product residues may create a highly flammable or explosive atmosphere inside the container. Do not cut, weld or grind used containers unless they have been cleaned thoroughly internally. Avoid dispersal of spilled material and runoff and contact with soil, waterways, drains and sewers.

Disposal should be in accordance with applicable regional, national and local laws and regulations.

Refer to Section 7: HANDLING AND STORAGE and Section 8: EXPOSURE CONTROLS/PERSONAL PROTECTION for additional handling information and protection of employees. Section 6. Accidental release measures

Powered by ATRION

14 . Transport information

Regulation	UN number	Proper shipping name	Classes	PG*	Additional information
UN	1263	PAINT	3	III	-
IMDG	1263	PAINT. Marine pollutant (Naphtha (petroleum), hydrotreated heavy, Naphtha (petroleum), heavy alkylate)	3	III	-
DOT	1263	PAINT	Combustible liquid.	III	**Remarks** USA Only: Can be reclassified as Combustible Liquid. Non-Bulk highway shipments (Less than or Equal to 450Liters) can be shipped as non-regulated.

PG* : Packing group

Reportable quantity RQ : CERCLA: Hazardous substances.: No products were found.

15 . Regulatory information

United States inventory (TSCA 8b) : All components are listed or exempted.
Australia inventory (AICS) : At least one component is not listed.
Canada inventory (DSL) : All components are listed or exempted.
China inventory (IECSC) : All components are listed or exempted.
Europe inventory (REACH) : Please contact your supplier for information on the inventory status of this material.
Japan inventory (ENCS) : At least one component is not listed.
Korea inventory (KECI) : All components are listed or exempted.
New Zealand (NZIoC) : Substance Use Restricted
Philippines inventory (PICCS) : At least one component is not listed.

United States

U.S. Federal regulations :

SARA 302/304/311/312 extremely hazardous substances: No products were found.
SARA 302/304 emergency planning and notification: No products were found.
SARA 302/304/311/312 hazardous chemicals: Limestone; Titanium dioxide
CERCLA: Hazardous substances.: No products were found.

SARA 311/312 MSDS Distribution - Chemical Inventory - Hazard Identification:

Chemical name	CAS #	Acute	Chronic	Fire	Reactive	Pressure
Limestone	**1317-65-3**	N	N	N	N	N
Naphtha (petroleum), hydrotreated heavy	**64742-48-9**	Y	N	N	N	N
Titanium dioxide	**13463-67-7**	N	Y	N	N	N
Naphtha (petroleum), heavy alkylate	**64741-65-7**	Y	N	N	N	N
Quartz (SiO2) (<10 microns)	**14808-60-7**	N	Y	N	N	N
2-butanone oxime	**96-29-7**	Y	Y	Y	Y	N
	Product as-supplied :	Y	Y	Y	N	N

Additional environmental information is contained on the Environmental Data Sheet for this product, which can be obtained from your PPG representative.

California Prop. 65

WARNING: This product contains a chemical known to the State of California to cause cancer.

Canada

WHMIS (Canada) : Class B-3: Combustible liquid with a flash point between 37.8°C (100°F) and 93.3°C (200°F). Class D-2A: Material causing other toxic effects (Very toxic). Class D-2B: Material causing other toxic effects (Toxic).

Mexico

Powered by ATRION

15 . Regulatory information

Classification

Flammability : 2 **Health** : 2 **Reactivity** : 0

16 . Other information

Hazardous Material Information System (U.S.A.)

Health : 2 * **Flammability** : 2 **Physical hazards** : 0

(*) - Chronic effects

Caution: HMIS® ratings are based on a 0-4 rating scale, with 0 representing minimal hazards or risks, and 4 representing significant hazards or risks Although HMIS® ratings are not required on MSDSs under 29 CFR 1910.1200, the preparer may choose to provide them. HMIS® ratings are to be used with a fully implemented HMIS® program. HMIS® is a registered mark of the National Paint & Coatings Association (NPCA). HMIS® materials may be purchased exclusively from J. J. Keller (800) 327-6868.

The customer is responsible for determining the PPE code for this material.

National Fire Protection Association (U.S.A.)

Health : 2 **Flammability** : 2 **Instability** : 0

Date of previous issue : **2/3/2011.**

Organization that prepared the MSDS : EHS

◤ **Indicates information that has changed from previously issued version.**

Disclaimer

The information contained in this data sheet is based on present scientific and technical knowledge. The purpose of this information is to draw attention to the health and safety aspects concerning the products supplied by PPG, and to recommend precautionary measures for the storage and handling of the products. No warranty or guarantee is given in respect of the properties of the products. No liability can be accepted for any failure to observe the precautionary measures described in this data sheet or for any misuse of the products.

Powered by ATRION

Material Safety Data Sheet

Date of issue 18 January 2011
Version 18

1 . Product and company identification

Product name : RED INHIBITIVE PRIMER

Code : 6-208

Supplier : PPG Industries, Inc.
One PPG Place
Pittsburgh, PA 15272

Emergency telephone number : (412) 434-4515 (U.S.)
(514) 645-1320 (Canada)
01-800-00-21-400 (Mexico)

Technical Phone Number : (412) 492-5200 (ALLISON PARK, PA) 8:00 a.m. - 5:00 p.m. EST

2 . Hazards identification

Emergency overview : WARNING!

COMBUSTIBLE LIQUID AND VAPOR. CAUSES RESPIRATORY TRACT IRRITATION. MAY BE HARMFUL IF INHALED, ABSORBED THROUGH SKIN OR SWALLOWED. SANDING AND GRINDING DUSTS MAY BE HARMFUL IF INHALED. MAY CAUSE EYE IRRITATION. PROLONGED OR REPEATED CONTACT MAY DRY SKIN AND CAUSE IRRITATION. CONTAINS MATERIAL THAT CAN CAUSE TARGET ORGAN DAMAGE. CANCER HAZARD - CONTAINS MATERIAL WHICH CAN CAUSE CANCER.

Keep away from heat, sparks and flame. Do not breathe vapor or mist. Do not swallow. Avoid contact with eyes, skin and clothing. Use only with adequate ventilation. Keep container tightly closed and sealed until ready for use. Wash thoroughly after handling.

Potential acute health effects

Inhalation : May be harmful if inhaled. Severely irritating to the respiratory system. Can irritate eyes, nose, mouth and throat.

Ingestion : May be harmful if swallowed.

Skin : Harmful in contact with skin. May cause skin dryness and irritation.

Eyes : Moderately irritating to eyes.

Over-exposure signs/symptoms

Repeated exposure to high vapor concentrations may cause irritation of the respiratory system and permanent brain and nervous system damage. Inhalation of vapor/aerosol concentrations above the recommended exposure limits causes headaches, drowsiness and nausea and may lead to unconsciousness or death. There is some evidence that repeated exposure to organic solvent vapors in combination with constant loud noise can cause greater hearing loss than expected from exposure to noise alone. This product contains crystalline silica which can cause lung cancer or silicosis. The risk of cancer depends on the duration and level of exposure to dust from sanding surfaces or mist from spray applications.

Medical conditions aggravated by over-exposure : Pre-existing disorders involving any target organs mentioned in this MSDS as being at risk may be aggravated by over-exposure to this product.

This Material Safety Data Sheet has been prepared in accordance with Canada's Workplace Hazardous Materials Information System (WHMIS) and the OSHA Hazard Communication Standard (29 CFR 1910.1200).

See toxicological information (Section 11)

Powered by ATRION

3 . Composition/information on ingredients

Name	CAS number	%
Stoddard solvent	8052-41-3	10 - 30
Nepheline syenite	37244-96-5	10 - 30
Talc , not containing asbestiform fibres	14807-96-6	5 - 10
Calcium borate silicate	59794-15-9	5 - 10
barium diboron tetraoxide	13701-59-2	5 - 10
diiron trioxide	1309-37-1	1 - 5
xylene	1330-20-7	0.1 - 1
2-butanone oxime	96-29-7	0.1 - 1
1,2,4-trimethylbenzene	95-63-6	0.1 - 1
Ethylbenzene	100-41-4	0.1 - 1
Carbon black	1333-86-4	0.1 - 1
Quartz (SiO2) (>10 microns)	14808-60-7	0.1 - 1

There are no additional ingredients present which, within the current knowledge of the supplier and in the concentrations applicable, are classified as hazardous to health or the environment and hence require reporting in this section.

4 . First aid measures

If ingestion, irritation, any type of overexposure or symptoms of overexposure occur during or persists after use of this product, contact a POISON CONTROL CENTER, EMERGENCY ROOM OR PHYSICIAN immediately; have Material Safety Data Sheet information available. Never give anything by mouth to an unconscious or convulsing person.

Eye contact : Check for and remove any contact lenses. Immediately flush eyes with running water for at least 15 minutes, keeping eyelids open. Seek immediate medical attention.

Skin contact : Remove contaminated clothing and shoes. Wash skin thoroughly with soap and water or use recognized skin cleanser. Do NOT use solvents or thinners.

Inhalation : Remove to fresh air. Keep person warm and at rest. If not breathing, if breathing is irregular or if respiratory arrest occurs, provide artificial respiration or oxygen by trained personnel.

Ingestion : If swallowed, seek medical advice immediately and show this container or label. Keep person warm and at rest. Do not induce vomiting.

Notes to physician : No specific treatment. Treat symptomatically. Contact poison treatment specialist immediately if large quantities have been ingested or inhaled.

5 . Fire-fighting measures

Flammability of the product : Combustible liquid. In a fire or if heated, a pressure increase will occur and the container may burst, with the risk of a subsequent explosion. Vapors may accumulate in low or confined areas or travel a considerable distance to a source of ignition and flash back.

Extinguishing media

Suitable : Use dry chemical, CO_2, water spray (fog) or foam.

Not suitable : Do not use water jet.

Special exposure hazards : Promptly isolate the scene by removing all persons from the vicinity of the incident if there is a fire. No action shall be taken involving any personal risk or without suitable training. Move containers from fire area if this can be done without risk. Use water spray to keep fire-exposed containers cool.

Hazardous combustion products : Decomposition products may include the following materials:
carbon oxides
metal oxide/oxides

Special protective equipment for fire-fighters : Fire-fighters should wear appropriate protective equipment and self-contained breathing apparatus (SCBA) with a full face-piece operated in positive pressure mode.

Powered by ATRION

6 . Accidental release measures

Personal precautions : No action shall be taken involving any personal risk or without suitable training. Evacuate surrounding areas. Keep unnecessary and unprotected personnel from entering. Do not touch or walk through spilled material. Shut off all ignition sources. No flares, smoking or flames in hazard area. Avoid breathing vapor or mist. Provide adequate ventilation. Wear appropriate respirator when ventilation is inadequate. Put on appropriate personal protective equipment (see Section 8).

Environmental precautions : Avoid dispersal of spilled material and runoff and contact with soil, waterways, drains and sewers. Inform the relevant authorities if the product has caused environmental pollution (sewers, waterways, soil or air).

Large spill : Stop leak if without risk. Move containers from spill area. Approach release from upwind. Use spark-proof tools and explosion-proof equipment. Prevent entry into sewers, water courses, basements or confined areas. Wash spillages into an effluent treatment plant or proceed as follows. Contain and collect spillage with non-combustible, absorbent material e.g. sand, earth, vermiculite or diatomaceous earth and place in container for disposal according to local regulations (see section 13). Dispose of via a licensed waste disposal contractor. Contaminated absorbent material may pose the same hazard as the spilled product. Note: see section 1 for emergency contact information and section 13 for waste disposal.

Small spill : Stop leak if without risk. Move containers from spill area. Use spark-proof tools and explosion-proof equipment. Dilute with water and mop up if water-soluble or absorb with an inert dry material and place in an appropriate waste disposal container. Dispose of via a licensed waste disposal contractor.

7 . Handling and storage

Handling : Materials such as cleaning rags, paper wipes and protective clothing, which are contaminated with the product may spontaneously self-ignite. To avoid the risks of fires, all contaminated materials should be placed in a metal container filled with water and sealed. Contaminated materials should be removed from the workplace at the end of each working day and be stored outside. Put on appropriate personal protective equipment (see Section 8). Eating, drinking and smoking should be prohibited in areas where this material is handled, stored and processed. Do not breathe vapor or mist. Do not swallow. Do not get in eyes or on skin or clothing. Use only with adequate ventilation. Wear appropriate respirator when ventilation is inadequate. Do not enter storage areas and confined spaces unless adequately ventilated. Keep in the original container or an approved alternative made from a compatible material, kept tightly closed when not in use. Store and use away from heat, sparks, open flame or any other ignition source. Use explosion-proof electrical (ventilating, lighting and material handling) equipment. Use non-sparking tools. Take precautionary measures against electrostatic discharges. Vapors are heavier than air and may spread along floors. To avoid fire or explosion, dissipate static electricity during transfer by grounding and bonding containers and equipment before transferring material. Empty containers retain product residue and can be hazardous. Do not reuse container. If this material is part of a multiple component system, read the Material Safety Data Sheet(s) for the other component or components before blending as the resulting mixture may have the hazards of all of its parts.

Storage : Store in accordance with local regulations. Store in a segregated and approved area. Store in original container protected from direct sunlight in a dry, cool and well-ventilated area, away from incompatible materials (see section 10) and food and drink. Eliminate all ignition sources. Separate from oxidizing materials. Keep container tightly closed and sealed until ready for use. Containers that have been opened must be carefully resealed and kept upright to prevent leakage. Do not store in unlabeled containers. Use appropriate containment to avoid environmental contamination. Do not store above the following temperature: 120F / 49C.

Powered by ATRION

8 . Exposure controls/personal protection

Name	Result	ACGIH	OSHA	Ontario	Mexico	PPG
Stoddard solvent	TWA STEL	100 ppm Not established	500 ppm Not established	100 ppm Not established	100 ppm 200 ppm	Not established Not established
Nepheline syenite	TWA	10 MG/M3 TD 3 MG/M3 R	15 mg/m3 TD 5 mg/m3 R 15 mg/m3	10 mg/m³	Not established	Not established
Talc , not containing asbestiform fibres	TWA	2 mg/m³ R	20 mppcf Z	2 mg/m³ R	2 mg/m³ R	Not established
barium diboron tetraoxide	TWA	0.5 mg/m³ (as Ba)	0.5 mg/m³ (as Ba) 0.5 mg/m3 (as Ba)	Not established	0.5 mg/m³ (as Ba)	Not established
diiron trioxide	TWA STEL	5 mg/m³ R Not established	10 mg/m³ Not established	5 mg/m³ R Not established	5 mg/m³ (as Fe) 10 mg/m³ (as Fe)	Not established Not established
xylene	TWA STEL	100 ppm 150 ppm	100 ppm Not established	100 ppm 150 ppm	100 ppm 150 ppm	Not established Not established
2-butanone oxime	TWA STEL	Not established Not established	Not established Not established	Not established Not established	Not established Not established	3 ppm 10 ppm
1,2,4-trimethylbenzene	TWA STEL	25 ppm Not established	Not established Not established	25 ppm Not established	25 ppm 35 ppm	Not established Not established
Ethylbenzene	TWA STEL	100 ppm 125 ppm	100 ppm Not established	100 ppm 125 ppm	100 ppm 125 ppm	Not established Not established
Carbon black	TWA STEL	3.5 mg/m³ Not established	3.5 mg/m³ Not established	3.5 mg/m³ Not established	3.5 mg/m³ 7 mg/m³	Not established Not established
Quartz (SiO2) (>10 microns)	TWA	0.025 mg/m³ R	10 mg/m³ R Z 30 mg/m³ TD Z 250 mppcf R Z	0.1 mg/m³ R	0.1 mg/m³ R	Not established

Key to abbreviations

A = Acceptable Maximum Peak
ACGIH = American Conference of Governmental Industrial Hygienists.
C = Ceiling Limit
F = Fume
IPEL = Internal Permissible Exposure Limit
S = Potential skin absorption
SR = Respiratory sensitization
SS = Skin sensitization
STEL = Short term Exposure limit values
TD = Total dust

Powered by ATRION

8 . Exposure controls/personal protection

OSHA = Occupational Safety and Health Administration.
R = Respirable
Z = OSHA 29CFR 1910.1200 Subpart Z - Toxic and Hazardous Substances
TLV = Threshold Limit Value
TWA = Time Weighted Average

Consult local authorities for acceptable exposure limits.

Recommended monitoring procedures : If this product contains ingredients with exposure limits, personal, workplace atmosphere or biological monitoring may be required to determine the effectiveness of the ventilation or other control measures and/or the necessity to use respiratory protective equipment.

Engineering measures : Use only with adequate ventilation. Use process enclosures, local exhaust ventilation or other engineering controls to keep worker exposure to airborne contaminants below any recommended or statutory limits. The engineering controls also need to keep gas, vapor or dust concentrations below any lower explosive limits. Use explosion-proof ventilation equipment.

Hygiene measures : Wash hands, forearms and face thoroughly after handling chemical products, before eating, smoking and using the lavatory and at the end of the working period. Appropriate techniques should be used to remove potentially contaminated clothing. Wash contaminated clothing before reusing. Ensure that eyewash stations and safety showers are close to the workstation location.

Personal protection

Eyes : Safety glasses with side shields.

Hands : Chemical-resistant, impervious gloves complying with an approved standard should be worn at all times when handling chemical products if a risk assessment indicates this is necessary.

Gloves : For prolonged or repeated handling, use the following type of gloves:

Recommended: nitrile rubber, foil, fluor rubber

Respiratory : If workers are exposed to concentrations above the exposure limit, they must use appropriate, certified respirators. Use a properly fitted, air-purifying or air-fed respirator complying with an approved standard if a risk assessment indicates this is necessary. Respirator selection must be based on known or anticipated exposure levels, the hazards of the product and the safe working limits of the selected respirator.

Skin : Personal protective equipment for the body should be selected based on the task being performed and the risks involved and should be approved by a specialist before handling this product.

Environmental exposure controls : Emissions from ventilation or work process equipment should be checked to ensure they comply with the requirements of environmental protection legislation. In some cases, fume scrubbers, filters or engineering modifications to the process equipment will be necessary to reduce emissions to acceptable levels.

9 . Physical and chemical properties

Physical state : Liquid.
Flash point : Closed cup: 41.11°C (106°F)
Explosion limits : Lower: 1.2%
Color : Not available.
Odor : Not available.
pH : Not available.
Boiling/condensation point : >37.78°C (>100°F)
Melting/freezing point : Not available.
Specific gravity : 1.39
Density (lbs / gal) : 11.6
Vapor pressure : 0.29 kPa (2.2 mm Hg) [20°C]
Vapor density : Not available.
Volatility : 42% (v/v), 23.8% (w/w)
Odor threshold : Not available.
Evaporation rate : 36 (butyl acetate = 1)

Powered by ATRION

9 . Physical and chemical properties

Partition coefficient: n-octanol/water : Not available.

% Solid. (w/w) : 76.2

10 . Stability and reactivity

Stability : Stable under recommended storage and handling conditions (see section 7).

Conditions to avoid : Avoid all possible sources of ignition (spark or flame). Do not pressurize, cut, weld, braze, solder, drill, grind or expose containers to heat or sources of ignition.

Materials to avoid : Reactive or incompatible with the following materials:,acids,oxidizing materials,strong alkalis

Hazardous decomposition products : Under normal conditions of storage and use, hazardous decomposition products should not be produced.

Hazardous polymerization : Under normal conditions of storage and use, hazardous polymerization will not occur.

11 . Toxicological information

Acute toxicity

Product/ingredient name	Result	Species	Dose	Exposure
Stoddard solvent	LD50 Oral	Rat	>5 g/kg	-
Calcium borate silicate	LD50 Oral	Rat	5 g/kg	-
	LD50 Dermal	Rabbit	2 g/kg	-
barium diboron tetraoxide	LD50 Oral	Rat	0.85 g/kg	-
	LC50 Inhalation Vapor	Rat	3540 mg/m3	4 hours
diiron trioxide	LD50 Oral	Rat	10 g/kg	-
xylene	LD50 Oral	Rat	4.3 g/kg	-
	LD50 Dermal	Rabbit	>1.7 g/kg	-
	LC50 Inhalation Vapor	Rat	5000 ppm	4 hours
2-butanone oxime	LD50 Oral	Rat	930 mg/kg	-
	LD50 Dermal	Rabbit	200 uL/kg	-
1,2,4-trimethylbenzene	LD50 Oral	Rat	5 g/kg	-
	LC50 Inhalation	Rat	18000 mg/m3	4 hours
Ethylbenzene	LD50 Oral	Rat	3.5 g/kg	-
	LD50 Dermal	Rabbit	>5000 mg/kg	-
	LC50 Inhalation Vapor	Rat	4000 ppm	4 hours
Carbon black	LD50 Oral	Rat	>15400 mg/kg	-
	LD50 Dermal	Rabbit	>3 g/kg	-

Chronic toxicity

Conclusion/Summary : Not available.

Defatting irritant? : Prolonged or repeated contact can defat the skin and lead to irritation, cracking and/or dermatitis.

Target organs : Contains material which causes damage to the following organs: brain.
Contains material which may cause damage to the following organs: kidneys, lungs, cardiovascular system, upper respiratory tract, skin, eyes, central nervous system (CNS).

Carcinogenicity

Carcinogenicity : Contains material which can cause cancer. Risk of cancer depends on duration and level of exposure.

Classification

Product/ingredient name	ACGIH	IARC	EPA	NIOSH	NTP	OSHA

Powered by ATRION

11 . Toxicological information

Talc , not containing asbestiform fibres	A4	3	-	-	-	-
barium diboron tetraoxide	A4	-	-	-	-	-
diiron trioxide	A4	3	-	-	-	-
Ethylbenzene	A3	2B	-	-	-	-
Carbon black	A4	2B	-	+	-	-
Quartz (SiO2) (>10 microns)	A2	1	-	+	Proven.	-

Mutagenicity

Mutagenicity : No known significant effects or critical hazards.

Teratogenicity

Teratogenicity : No known significant effects or critical hazards.

Reproductive toxicity

Developmental effects : No known significant effects or critical hazards.

Fertility effects : No known significant effects or critical hazards.

12 . Ecological information

Environmental effects : No known significant effects or critical hazards.

Aquatic ecotoxicity

Product/ingredient name	Result	Species	Exposure
barium diboron tetraoxide	Acute LC50 62 to 84.5 ppm Fresh water	Fish - Rainbow trout,donaldson trout - Oncorhynchus mykiss	96 hours
	Acute EC50 20.3 to 22.4 ppm Fresh water	Daphnia - Water flea - Daphnia magna	48 hours
xylene	Acute LC50 3300 to 4093 ug/L Fresh water	Fish - Rainbow trout,donaldson trout - Oncorhynchus mykiss	96 hours
2-butanone oxime	Acute LC50 843000 to 914000 ug/L Fresh water	Fish - Fathead minnow - Pimephales promelas	96 hours
1,2,4-trimethylbenzene	Acute LC50 7720 to 8280 ug/L Fresh water	Fish - Fathead minnow - Pimephales promelas	96 hours
Ethylbenzene	Acute LC50 4200 ug/L Fresh water	Fish - Rainbow trout,donaldson trout - Oncorhynchus mykiss	96 hours
	Acute LC50 5100 to 5700 ug/L Marine water	Fish - Atlantic silverside - Menidia menidia	96 hours
	Acute EC50 2930 to 4400 ug/L Fresh water	Daphnia - Water flea - Daphnia magna	48 hours
	Chronic NOEC 3300 ug/L Marine water	Fish - Atlantic silverside - Menidia menidia	96 hours
	Chronic NOEC 6800 ug/L Fresh water	Daphnia - Water flea - Daphnia magna	48 hours

Other adverse effects : No known significant effects or critical hazards.

Powered by ATRION

13 . Disposal considerations

Waste disposal : The generation of waste should be avoided or minimized wherever possible. Significant quantities of waste product residues should not be disposed of via the foul sewer but processed in a suitable effluent treatment plant. Dispose of surplus and non-recyclable products via a licensed waste disposal contractor. Disposal of this product, solutions and any by-products should at all times comply with the requirements of environmental protection and waste disposal legislation and any regional local authority requirements. Waste packaging should be recycled. Incineration or landfill should only be considered when recycling is not feasible. This material and its container must be disposed of in a safe way. Care should be taken when handling emptied containers that have not been cleaned or rinsed out. Empty containers or liners may retain some product residues. Vapor from product residues may create a highly flammable or explosive atmosphere inside the container. Do not cut, weld or grind used containers unless they have been cleaned thoroughly internally. Avoid dispersal of spilled material and runoff and contact with soil, waterways, drains and sewers.

Disposal should be in accordance with applicable regional, national and local laws and regulations.

Refer to Section 7: HANDLING AND STORAGE and Section 8: EXPOSURE CONTROLS/PERSONAL PROTECTION for additional handling information and protection of employees. Section 6. Accidental release measures

14 . Transport information

Regulation	UN number	Proper shipping name	Classes	PG*	Additional information
UN	1263	PAINT	3	III	-
IMDG	1263	PAINT	3	III	-
DOT	1263	PAINT	Combustible liquid.	III	**Remarks** USA Only: Can be reclassified as Combustible Liquid. Non-Bulk highway shipments (Less than or Equal to 450Liters) can be shipped as non-regulated.

PG* : Packing group

Reportable quantity RQ : CERCLA: Hazardous substances.: Ethylbenzene: 1000 lbs. (454 kg); xylene: 100 lbs. (45.4 kg);

15 . Regulatory information

United States inventory (TSCA 8b) : All components are listed or exempted.
Australia inventory (AICS) : At least one component is not listed.
Canada inventory (DSL) : All components are listed or exempted.
China inventory (IECSC) : All components are listed or exempted.
Europe inventory (REACH) : Please contact your supplier for information on the inventory status of this material.
Japan inventory (ENCS) : At least one component is not listed.
Korea inventory (KECI) : All components are listed or exempted.
New Zealand (NZIoC) : Substance Use Restricted
Philippines inventory (PICCS) : At least one component is not listed.

United States

U.S. Federal regulations :

SARA 302/304/311/312 extremely hazardous substances: No products were found.
SARA 302/304 emergency planning and notification: No products were found.
SARA 302/304/311/312 hazardous chemicals: Stoddard solvent; Talc , not containing asbestiform fibres; diiron trioxide
CERCLA: Hazardous substances.: Ethylbenzene: 1000 lbs. (454 kg); xylene: 100 lbs. (45.4 kg);

SARA 311/312 MSDS Distribution - Chemical Inventory - Hazard Identification:

Chemical name	CAS #	Acute	Chronic	Fire	Reactive	Pressure

Powered by ATRION

15 . Regulatory information

Stoddard solvent	**8052-41-3**	Y	N	Y	N	N
Nepheline syenite	**37244-96-5**	N	N	N	N	N
Talc , not containing asbestiform fibres	**14807-96-6**	Y	N	N	N	N
barium diboron tetraoxide	**13701-59-2**	Y	N	N	N	N
Calcium borate silicate	**59794-15-9**	N	N	N	N	N
diiron trioxide	**1309-37-1**	N	N	N	N	N
2-butanone oxime	**96-29-7**	Y	Y	Y	Y	N
Ethylbenzene	**100-41-4**	Y	Y	Y	N	N
Carbon black	**1333-86-4**	N	Y	N	N	N
Quartz (SiO2) (>10 microns)	**14808-60-7**	N	Y	N	N	N
	Product as-supplied :	Y	Y	Y	N	N

SARA 313

Supplier notification :	**Chemical name**	**CAS number**	**Concentration**
	barium diboron tetraoxide	13701-59-2	5 - 10
	Ethylbenzene	100-41-4	0.1 - 1

Additional environmental information is contained on the Environmental Data Sheet for this product, which can be obtained from your PPG representative.

California Prop. 65

WARNING: This product contains a chemical known to the State of California to cause cancer.

Canada

WHMIS (Canada) : Class B-3: Combustible liquid with a flash point between 37.8°C (100°F) and 93.3°C (200°F). Class D-2A: Material causing other toxic effects (Very toxic). Class D-2B: Material causing other toxic effects (Toxic).

Mexico

Classification

Flammability : 2 **Health** : 2 **Reactivity** : 0

16 . Other information

Hazardous Material Information System (U.S.A.)

Health : 2 * **Flammability** : 2 **Physical hazards** : 0

(*) - Chronic effects

Caution: HMIS® ratings are based on a 0-4 rating scale, with 0 representing minimal hazards or risks, and 4 representing significant hazards or risks Although HMIS® ratings are not required on MSDSs under 29 CFR 1910.1200, the preparer may choose to provide them. HMIS® ratings are to be used with a fully implemented HMIS® program. HMIS® is a registered mark of the National Paint & Coatings Association (NPCA). HMIS® materials may be purchased exclusively from J. J. Keller (800) 327-6868.

The customer is responsible for determining the PPE code for this material.

National Fire Protection Association (U.S.A.)

Health : 2 **Flammability** : 2 **Instability** : 0

Date of previous issue : **11/20/2010.**

Organization that prepared the MSDS : EHS

Indicates information that has changed from previously issued version.

Disclaimer

The information contained in this data sheet is based on present scientific and technical knowledge. The purpose of this information is to draw attention to the health and safety aspects concerning the products supplied by PPG, and to recommend precautionary measures for the storage and handling of the products. No warranty or guarantee is given in respect of the properties of the products. No liability can be accepted for any failure to observe the precautionary measures described in this data sheet or for any misuse of the products.

Powered by ATRION

Material Safety Data Sheet

Date of issue 15 July 2010
Version 28

1 . Product and company identification

Product name : SPEEDHIDE INT S/G WHITE/PASTEL

Code : 6-500

Supplier : PPG Industries, Inc.
One PPG Place
Pittsburgh, PA 15272

Emergency telephone number : (412) 434-4515 (U.S.)
(514) 645-1320 (Canada)
01-800-00-21-400 (Mexico)

Technical Phone Number : 1-800-441-9695 (8:00 am to 5:00 pm EST)

2 . Hazards identification

Emergency overview : WARNING!

MAY BE HARMFUL IF INHALED OR SWALLOWED. MAY CAUSE RESPIRATORY TRACT AND EYE IRRITATION. CONTAINS MATERIAL THAT CAN CAUSE TARGET ORGAN DAMAGE.

Avoid breathing vapor or mist. Avoid contact with eyes, skin and clothing. Use only with adequate ventilation. Keep container tightly closed and sealed until ready for use. Wash thoroughly after handling.

Potential acute health effects

Inhalation : May be harmful if inhaled. Slightly irritating to the respiratory system.

Ingestion : May be harmful if swallowed.

Skin : No known significant effects or critical hazards.

Eyes : Moderately irritating to eyes.

Over-exposure signs/symptoms

Inhalation : Adverse symptoms may include the following:
respiratory tract irritation
coughing

Ingestion : No specific data.

Skin : No specific data.

Eyes : Adverse symptoms may include the following:
irritation
watering
redness

Medical conditions aggravated by over-exposure : Pre-existing disorders involving any target organs mentioned in this MSDS as being at risk may be aggravated by over-exposure to this product.

This Material Safety Data Sheet has been prepared in accordance with Canada's Workplace Hazardous Materials Information System (WHMIS) and the OSHA Hazard Communication Standard (29 CFR 1910.1200).

See toxicological information (section 11)

Powered by ATRION

3 . Composition/information on ingredients

Name	CAS number	%
Titanium dioxide	13463-67-7	10 - 30
Kaolin	1332-58-7	1 - 5
Silicon dioxide	7631-86-9	1 - 5
aluminium hydroxide	21645-51-2	0.5 - 1.5

There are no additional ingredients present which, within the current knowledge of the supplier and in the concentrations applicable, are classified as hazardous to health or the environment and hence require reporting in this section.

4 . First aid measures

If ingestion, irritation, any type of overexposure or symptoms of overexposure occur during or persists after use of this product, contact a POISON CONTROL CENTER, EMERGENCY ROOM OR PHYSICIAN immediately; have Material Safety Data Sheet information available. Never give anything by mouth to an unconscious or convulsing person.

Eye contact : Check for and remove any contact lenses. Immediately flush eyes with running water for at least 15 minutes, keeping eyelids open.

Skin contact : Remove contaminated clothing and shoes. Wash skin thoroughly with soap and water or use recognized skin cleanser. Do NOT use solvents or thinners.

Inhalation : Remove to fresh air. Keep person warm and at rest. If not breathing, if breathing is irregular or if respiratory arrest occurs, provide artificial respiration or oxygen by trained personnel.

Ingestion : If swallowed, seek medical advice immediately and show this container or label. Keep person warm and at rest. Do not induce vomiting.

Notes to physician : No specific treatment. Treat symptomatically. Contact poison treatment specialist immediately if large quantities have been ingested or inhaled.

5 . Fire-fighting measures

Flammability of the product : In a fire or if heated, a pressure increase will occur and the container may burst.

Extinguishing media

Suitable : Use an extinguishing agent suitable for the surrounding fire.

Not suitable : None known.

Special exposure hazards : Promptly isolate the scene by removing all persons from the vicinity of the incident if there is a fire. No action shall be taken involving any personal risk or without suitable training.

Hazardous combustion products : Decomposition products may include the following materials:
carbon oxides
metal oxide/oxides

Special protective equipment for fire-fighters : Fire-fighters should wear appropriate protective equipment and self-contained breathing apparatus (SCBA) with a full face-piece operated in positive pressure mode.

6 . Accidental release measures

Personal precautions : No action shall be taken involving any personal risk or without suitable training. Evacuate surrounding areas. Keep unnecessary and unprotected personnel from entering. Do not touch or walk through spilled material. Avoid breathing vapor or mist. Provide adequate ventilation. Wear appropriate respirator when ventilation is inadequate. Put on appropriate personal protective equipment (see section 8).

Environmental precautions : Avoid dispersal of spilled material and runoff and contact with soil, waterways, drains and sewers. Inform the relevant authorities if the product has caused environmental pollution (sewers, waterways, soil or air).

Powered by ATRION

6 . Accidental release measures

Large spill : Stop leak if without risk. Move containers from spill area. Approach release from upwind. Prevent entry into sewers, water courses, basements or confined areas. Wash spillages into an effluent treatment plant or proceed as follows. Contain and collect spillage with non-combustible, absorbent material e.g. sand, earth, vermiculite or diatomaceous earth and place in container for disposal according to local regulations (see section 13). Dispose of via a licensed waste disposal contractor. Contaminated absorbent material may pose the same hazard as the spilled product. Note: see section 1 for emergency contact information and section 13 for waste disposal.

Small spill : Stop leak if without risk. Move containers from spill area. Dilute with water and mop up if water-soluble or absorb with an inert dry material and place in an appropriate waste disposal container. Dispose of via a licensed waste disposal contractor.

7 . Handling and storage

Handling : Put on appropriate personal protective equipment (see section 8). Eating, drinking and smoking should be prohibited in areas where this material is handled, stored and processed. Do not swallow. Do not get in eyes or on skin or clothing. Avoid breathing vapor or mist. Use only with adequate ventilation. Wear appropriate respirator when ventilation is inadequate. Keep in the original container or an approved alternative made from a compatible material, kept tightly closed when not in use. Empty containers retain product residue and can be hazardous. Do not reuse container. If this material is part of a multiple component system, read the Material Safety Data Sheet(s) for the other component or components before blending as the resulting mixture may have the hazards of all of its parts.

Storage : Store in accordance with local regulations. Store in original container protected from direct sunlight in a dry, cool and well-ventilated area, away from incompatible materials (see section 10) and food and drink. Keep container tightly closed and sealed until ready for use. Containers that have been opened must be carefully resealed and kept upright to prevent leakage. Do not store in unlabeled containers. Use appropriate containment to avoid environmental contamination. Do not store below the following temperature: 32F / 0C.

8 . Exposure controls/personal protection

Name	Result	ACGIH	OSHA	Ontario	Mexico	PPG
Titanium dioxide	TWA	10 mg/m³	15 mg/m³ TD	10 mg/m³ TD	10 mg/m³ (as Ti)	Not established
	STEL	Not established	Not established	Not established	20 mg/m³ (as Ti)	Not established
Kaolin	TWA	2 mg/m³ R	5 mg/m³ R 15 mg/m³ TD	2 mg/m³ R TD	10 mg/m³	Not established
	STEL	Not established	Not established	Not established	20 mg/m³	Not established
Silicon dioxide	TWA	Not established	Not established	Not established	10 mg/m³ 3 mg/m³ R	Not established
aluminium hydroxide	TWA	1 mg/m³	Not established	2 mg/m³	2 mg/m³	Not established

Key to abbreviations

A = Acceptable Maximum Peak
ACGIH = American Conference of Governmental Industrial Hygienists.
C = Ceiling Limit
F = Fume
IPEL = Internal Permissible Exposure Limit
OSHA = Occupational Safety and Health Administration.
R = Respirable
Z = OSHA 29CFR 1910.1200 Subpart Z - Toxic and Hazardous Substances
S = Potential skin absorption
SR = Respiratory sensitization
SS = Skin sensitization
STEL = Short term Exposure limit values
TD = Total dust
TLV = Threshold Limit Value
TWA = Time Weighted Average

Powered by ATRION

8 . Exposure controls/personal protection

Consult local authorities for acceptable exposure limits.

Recommended monitoring procedures : If this product contains ingredients with exposure limits, personal, workplace atmosphere or biological monitoring may be required to determine the effectiveness of the ventilation or other control measures and/or the necessity to use respiratory protective equipment.

Engineering measures : Use only with adequate ventilation. If user operations generate dust, fumes, gas, vapor or mist, use process enclosures, local exhaust ventilation or other engineering controls to keep worker exposure to airborne contaminants below any recommended or statutory limits.

Hygiene measures : Wash hands, forearms and face thoroughly after handling chemical products, before eating, smoking and using the lavatory and at the end of the working period. Appropriate techniques should be used to remove potentially contaminated clothing. Wash contaminated clothing before reusing. Ensure that eyewash stations and safety showers are close to the workstation location.

Personal protection

Eyes : Safety glasses with side shields.

Hands : Chemical-resistant, impervious gloves complying with an approved standard should be worn at all times when handling chemical products if a risk assessment indicates this is necessary.

Respiratory : If workers are exposed to concentrations above the exposure limit, they must use appropriate, certified respirators. Use a properly fitted, air-purifying or air-fed respirator complying with an approved standard if a risk assessment indicates this is necessary. Respirator selection must be based on known or anticipated exposure levels, the hazards of the product and the safe working limits of the selected respirator.

Skin : Personal protective equipment for the body should be selected based on the task being performed and the risks involved and should be approved by a specialist before handling this product.

Environmental exposure controls : Emissions from ventilation or work process equipment should be checked to ensure they comply with the requirements of environmental protection legislation. In some cases, fume scrubbers, filters or engineering modifications to the process equipment will be necessary to reduce emissions to acceptable levels.

9 . Physical and chemical properties

Physical state : Liquid.

Flash point : Closed cup: >93.33°C (>200°F)

Color : Not available.

Odor : Not available.

pH : Not available.

Boiling/condensation point : >37.78°C (>100°F)

Melting/freezing point : Not available.

Specific gravity : 1.22

Density (lbs / gal) : 10.18

Vapor pressure : 2.3 kPa (17.5 mm Hg)

Vapor density : Not available.

Volatility : 64% (v/v), 52.43% (w/w)

Odor threshold : Not available.

Evaporation rate : 35 (butyl acetate = 1)

Octanol/water partition coefficient : Not available.

% Solid. (w/w) : 47.57

Powered by ATRION

10 . Stability and reactivity

Stability : Stable under recommended storage and handling conditions (see section 7).

Conditions to avoid : No specific data.

Materials to avoid : Reactive or incompatible with the following materials:,water,acids

Hazardous decomposition products : Under normal conditions of storage and use, hazardous decomposition products should not be produced.

Hazardous polymerization : Under normal conditions of storage and use, hazardous polymerization will not occur.

11 . Toxicological information

Acute toxicity

Product/ingredient name	Result	Species	Dose	Exposure
Titanium dioxide	LD50 Oral	Rat	>10 g/kg	-
Kaolin	LD50 Oral	Rat	>5000 mg/kg	-

Conclusion/Summary : Not available.

Chronic toxicity

Conclusion/Summary : Not available.

Target organs : Contains material which causes damage to the following organs: lungs, upper respiratory tract, eyes, central nervous system (CNS).
Contains material which may cause damage to the following organs: skin, stomach.

Carcinogenicity

Carcinogenicity : Contains material which may cause cancer, based on animal data. Risk of cancer depends on duration and level of exposure.

Classification

Product/ingredient name	ACGIH	IARC	EPA	NIOSH	NTP	OSHA
Titanium dioxide	A4	2B	-	-	-	-
Kaolin	A4	-	-	-	-	-
Silicon dioxide	-	3	-	-	-	-
aluminium hydroxide	A4	-	-	-	-	-

Mutagenicity

Mutagenicity : No known significant effects or critical hazards.

Teratogenicity

Teratogenicity : No known significant effects or critical hazards.

Reproductive toxicity

Developmental effects : No known significant effects or critical hazards.

Fertility effects : No known significant effects or critical hazards.

12 . Ecological information

Environmental effects : No known significant effects or critical hazards.

Aquatic ecotoxicity

Product/ingredient name	Result	Species	Exposure
Titanium dioxide	Acute LC50 5.5 ppm Fresh water	Daphnia - Water flea - Daphnia magna	48 hours
	Chronic NOEC 1 ppm Fresh water	Daphnia - Water flea - Daphnia magna	48 hours

Powered by ATRION

13 . Disposal considerations

Waste disposal : The generation of waste should be avoided or minimized wherever possible. Empty containers or liners may retain some product residues. This material and its container must be disposed of in a safe way. Dispose of surplus and non-recyclable products via a licensed waste disposal contractor. Disposal of this product, solutions and any by-products should at all times comply with the requirements of environmental protection and waste disposal legislation and any regional local authority requirements. Avoid dispersal of spilled material and runoff and contact with soil, waterways, drains and sewers.

Disposal should be in accordance with applicable regional, national and local laws and regulations.

Refer to Section 7: HANDLING AND STORAGE and Section 8: EXPOSURE CONTROLS/PERSONAL PROTECTION for additional handling information and protection of employees. Section 6. Accidental release measures

14 . Transport information

Regulation	UN number	Proper shipping name	Classes	PG*	Additional information
UN	None.	Not regulated.	None.	-	-
IMDG	None.	Not regulated.	None.	-	-
DOT	None.	Not regulated.	None.	-	-

PG* : Packing group

Reportable quantity RQ : CERCLA: Hazardous substances.: No products were found.

15 . Regulatory information

United States inventory (TSCA 8b) : All components are listed or exempted.
Australia inventory (AICS) : At least one component is not listed.
Canada inventory (DSL) : All components are listed or exempted.
China inventory (IECSC) : All components are listed or exempted.
Europe inventory (REACH) : Please contact your supplier for information on the inventory status of this material.
Japan inventory (ENCS) : At least one component is not listed.
Korea inventory (KECI) : At least one component is not listed.
New Zealand (NZIoC) : At least one component is not listed.
Philippines inventory (PICCS) : At least one component is not listed.

United States

U.S. Federal regulations : **TSCA 12(b) annual export notification**: No products were found.
TSCA 12(b) one-time export: No products were found.
SARA 302/304/311/312 extremely hazardous substances: No products were found.
SARA 302/304 emergency planning and notification: No products were found.

SARA 302/304/311/312 hazardous chemicals: aluminium hydroxide; Titanium dioxide; Kaolin
CERCLA: Hazardous substances.: No products were found.

SARA 311/312 MSDS Distribution - Chemical Inventory - Hazard Identification:

Chemical name	CAS #	Acute	Chronic	Fire	Reactive	Pressure
Titanium dioxide	13463-67-7	N	Y	N	N	N
Kaolin	1332-58-7	Y	N	N	N	N
Silicon dioxide	7631-86-9	N	N	N	N	N
aluminium hydroxide	21645-51-2	N	N	N	N	N
	Product as-supplied :	Y	Y	N	N	N

Additional environmental information is contained on the Environmental Data Sheet for this product, which can be obtained from your PPG representative.

Canada

Powered by ATRION

15 . Regulatory information

WHMIS (Canada) : Class D-2A: Material causing other toxic effects (Very toxic). Class D-2B: Material causing other toxic effects (Toxic).

Mexico

Classification

Flammability : 1 **Health** : 1 **Reactivity** : 0

16 . Other information

Hazardous Material Information System (U.S.A.)

Health : 1 * **Flammability** : 1 **Physical hazards** : 0

(*) - Chronic effects

Caution: HMIS® ratings are based on a 0-4 rating scale, with 0 representing minimal hazards or risks, and 4 representing significant hazards or risks Although HMIS® ratings are not required on MSDSs under 29 CFR 1910.1200, the preparer may choose to provide them. HMIS® ratings are to be used with a fully implemented HMIS® program. HMIS® is a registered mark of the National Paint & Coatings Association (NPCA). HMIS® materials may be purchased exclusively from J. J. Keller (800) 327-6868.

The customer is responsible for determining the PPE code for this material.

National Fire Protection Association (U.S.A.)

Health : 1 **Flammability** : 1 **Instability** : 0

Date of previous issue : **5/18/2010.**

Organization that prepared the MSDS : EHS

Indicates information that has changed from previously issued version.

Disclaimer

The information contained in this data sheet is based on present scientific and technical knowledge. The purpose of this information is to draw attention to the health and safety aspects concerning the products supplied by PPG, and to recommend precautionary measures for the storage and handling of the products. No warranty or guarantee is given in respect of the properties of the products. No liability can be accepted for any failure to observe the precautionary measures described in this data sheet or for any misuse of the products.

Powered by ATRION

Material Safety Data Sheet

Date of issue 29 August 2010
Version 12

1 . Product and company identification

Product name : YELLOW ZONE MARKING PAINT

Code : 11-54

Supplier : PPG Industries, Inc.
One PPG Place
Pittsburgh, PA 15272

Emergency telephone number : (412) 434-4515 (U.S.)
(514) 645-1320 (Canada)
01-800-00-21-400 (Mexico)

Technical Phone Number : 1-800-441-9695 (8:00 am to 5:00 pm EST)

2 . Hazards identification

Emergency overview : WARNING!

MAY BE HARMFUL IF INHALED OR SWALLOWED. SANDING AND GRINDING DUSTS MAY BE HARMFUL IF INHALED. CONTAINS MATERIAL THAT MAY CAUSE TARGET ORGAN DAMAGE, BASED ON ANIMAL DATA. CANCER HAZARD - CONTAINS MATERIAL WHICH CAN CAUSE CANCER.

Use only with adequate ventilation. Keep container tightly closed and sealed until ready for use. Wash thoroughly after handling.

Potential acute health effects

Inhalation : May be harmful if inhaled. Exposure to decomposition products may cause a health hazard. Serious effects may be delayed following exposure.

Ingestion : May be harmful if swallowed.

Skin : No known significant effects or critical hazards.

Eyes : No known significant effects or critical hazards.

Over-exposure signs/symptoms

This product contains crystalline silica which can cause lung cancer or silicosis. The risk of cancer depends on the duration and level of exposure to dust from sanding surfaces or mist from spray applications.

Medical conditions aggravated by over-exposure : Pre-existing disorders involving any target organs mentioned in this MSDS as being at risk may be aggravated by over-exposure to this product.

This Material Safety Data Sheet has been prepared in accordance with Canada's Workplace Hazardous Materials Information System (WHMIS) and the OSHA Hazard Communication Standard (29 CFR 1910.1200).

See toxicological information (section 11)

3 . Composition/information on ingredients

Name	CAS number	%
Limestone	1317-65-3	30 - 60
Titanium dioxide	13463-67-7	1 - 5
Quartz (SiO2) (<10 microns)	14808-60-7	0.1 - 1

There are no additional ingredients present which, within the current knowledge of the supplier and in the concentrations applicable, are classified as hazardous to health or the environment and hence require reporting in this section.

Powered by ATRION

4 . First aid measures

If ingestion, irritation, any type of overexposure or symptoms of overexposure occur during or persists after use of this product, contact a POISON CONTROL CENTER, EMERGENCY ROOM OR PHYSICIAN immediately; have Material Safety Data Sheet information available. Never give anything by mouth to an unconscious or convulsing person.

Eye contact : Check for and remove any contact lenses. Immediately flush eyes with running water for at least 15 minutes, keeping eyelids open. Seek immediate medical attention.

Skin contact : Remove contaminated clothing and shoes. Wash skin thoroughly with soap and water or use recognized skin cleanser. Do NOT use solvents or thinners.

Inhalation : Remove to fresh air. Keep person warm and at rest. If not breathing, if breathing is irregular or if respiratory arrest occurs, provide artificial respiration or oxygen by trained personnel.

Ingestion : If swallowed, seek medical advice immediately and show this container or label. Keep person warm and at rest. Do not induce vomiting.

Notes to physician : In case of inhalation of decomposition products in a fire, symptoms may be delayed. The exposed person may need to be kept under medical surveillance for 48 hours.

5 . Fire-fighting measures

Flammability of the product : In a fire or if heated, a pressure increase will occur and the container may burst.

Extinguishing media

Suitable : Use an extinguishing agent suitable for the surrounding fire.

Not suitable : None known.

Special exposure hazards : Promptly isolate the scene by removing all persons from the vicinity of the incident if there is a fire. No action shall be taken involving any personal risk or without suitable training.

Hazardous combustion products : Decomposition products may include the following materials:
carbon oxides
nitrogen oxides
metal oxide/oxides

Special protective equipment for fire-fighters : Fire-fighters should wear appropriate protective equipment and self-contained breathing apparatus (SCBA) with a full face-piece operated in positive pressure mode.

6 . Accidental release measures

Personal precautions : No action shall be taken involving any personal risk or without suitable training. Evacuate surrounding areas. Keep unnecessary and unprotected personnel from entering. Do not touch or walk through spilled material. Avoid breathing vapor or mist. Provide adequate ventilation. Wear appropriate respirator when ventilation is inadequate . Put on appropriate personal protective equipment (see Section 8).

Environmental precautions : Avoid dispersal of spilled material and runoff and contact with soil, waterways, drains and sewers. Inform the relevant authorities if the product has caused environmental pollution (sewers, waterways, soil or air).

Large spill : Stop leak if without risk. Move containers from spill area. Approach release from upwind. Prevent entry into sewers, water courses, basements or confined areas. Wash spillages into an effluent treatment plant or proceed as follows. Contain and collect spillage with non-combustible, absorbent material e.g. sand, earth, vermiculite or diatomaceous earth and place in container for disposal according to local regulations (see section 13). Dispose of via a licensed waste disposal contractor. Contaminated absorbent material may pose the same hazard as the spilled product. Note: see section 1 for emergency contact information and section 13 for waste disposal.

Small spill : Stop leak if without risk. Move containers from spill area. Dilute with water and mop up if water-soluble or absorb with an inert dry material and place in an appropriate waste disposal container. Dispose of via a licensed waste disposal contractor.

Powered by ATRION

7 . Handling and storage

Handling : Put on appropriate personal protective equipment (see Section 8). Eating, drinking and smoking should be prohibited in areas where this material is handled, stored and processed. Do not swallow. Do not get in eyes or on skin or clothing. Avoid breathing vapor or mist. If during normal use the material presents a respiratory hazard, use only with adequate ventilation or wear appropriate respirator. Keep in the original container or an approved alternative made from a compatible material, kept tightly closed when not in use. Empty containers retain product residue and can be hazardous. Do not reuse container.

Storage : Store in accordance with local regulations. Store in original container protected from direct sunlight in a dry, cool and well-ventilated area, away from incompatible materials (see section 10) and food and drink. Keep container tightly closed and sealed until ready for use. Containers that have been opened must be carefully resealed and kept upright to prevent leakage. Do not store in unlabeled containers. Use appropriate containment to avoid environmental contamination.

8 . Exposure controls/personal protection

Name	Result	ACGIH	OSHA	Ontario	Mexico	PPG
Limestone	TWA STEL	Not established Not established	5 mg/m³ R 15 mg/m³ TD Not established	Not established Not established	10 mg/m³ 20 mg/m³	Not established Not established
Titanium dioxide	TWA STEL	10 mg/m³ Not established	15 mg/m³ TD Not established	10 mg/m³ TD Not established	10 mg/m³ (as Ti) 20 mg/m³ (as Ti)	Not established Not established
Quartz (SiO2) (<10 microns)	TWA	0.025 mg/m³ R	10 mg/m³ R Z 30 mg/m³ TD Z 250 mppcf R Z	0.1 mg/m³ R	0.1 mg/m³ R	Not established

Key to abbreviations

A	= Acceptable Maximum Peak	S	= Potential skin absorption
ACGIH	= American Conference of Governmental Industrial Hygienists.	SR	= Respiratory sensitization
C	= Ceiling Limit	SS	= Skin sensitization
F	= Fume	STEL	= Short term Exposure limit values
IPEL	= Internal Permissible Exposure Limit	TD	= Total dust
OSHA	= Occupational Safety and Health Administration.	TLV	= Threshold Limit Value
R	= Respirable	TWA	= Time Weighted Average
Z	= OSHA 29CFR 1910.1200 Subpart Z - Toxic and Hazardous Substances		

Consult local authorities for acceptable exposure limits.

Recommended monitoring procedures : If this product contains ingredients with exposure limits, personal, workplace atmosphere or biological monitoring may be required to determine the effectiveness of the ventilation or other control measures and/or the necessity to use respiratory protective equipment.

Engineering measures : If user operations generate dust, fumes, gas, vapor or mist, use process enclosures, local exhaust ventilation or other engineering controls to keep worker exposure to airborne contaminants below any recommended or statutory limits.

Hygiene measures : Wash hands, forearms and face thoroughly after handling chemical products, before eating, smoking and using the lavatory and at the end of the working period. Appropriate techniques should be used to remove potentially contaminated clothing. Wash contaminated clothing before reusing. Ensure that eyewash stations and safety showers are close to the workstation location.

Personal protection

Eyes : Safety glasses with side shields.

Powered by ATRION

8 . Exposure controls/personal protection

Hands : Chemical-resistant, impervious gloves complying with an approved standard should be worn at all times when handling chemical products if a risk assessment indicates this is necessary.

Respiratory : If workers are exposed to concentrations above the exposure limit, they must use appropriate, certified respirators. Use a properly fitted, air-purifying or air-fed respirator complying with an approved standard if a risk assessment indicates this is necessary. Respirator selection must be based on known or anticipated exposure levels, the hazards of the product and the safe working limits of the selected respirator.

Skin : Personal protective equipment for the body should be selected based on the task being performed and the risks involved and should be approved by a specialist before handling this product.

Environmental exposure controls : Emissions from ventilation or work process equipment should be checked to ensure they comply with the requirements of environmental protection legislation. In some cases, fume scrubbers, filters or engineering modifications to the process equipment will be necessary to reduce emissions to acceptable levels.

9 . Physical and chemical properties

Physical state : Liquid.

Flash point : Closed cup: >93.33°C (>200°F)

Color : Not available.

Odor : Not available.

pH : Not available.

Boiling/condensation point : >37.78°C (>100°F)

Melting/freezing point : Not available.

Specific gravity : 1.63

Density (lbs / gal) : 13.6

Vapor pressure : 2.3 kPa (17.4 mm Hg) [20°C]

Vapor density : Not available.

Volatility : 44% (v/v), 26.65% (w/w)

Odor threshold : Not available.

Evaporation rate : 35 (butyl acetate = 1)

Partition coefficient: n-octanol/water : Not available.

% Solid. (w/w) : 73.35

10 . Stability and reactivity

Stability : Stable under recommended storage and handling conditions (see section 7).

Conditions to avoid : No specific data.

Materials to avoid : Reactive or incompatible with the following materials:,acids,oxidizing materials,strong alkalis

Hazardous decomposition products : Under normal conditions of storage and use, hazardous decomposition products should not be produced.

Hazardous polymerization : Under normal conditions of storage and use, hazardous polymerization will not occur.

Powered by ATRION

11 . Toxicological information

Acute toxicity

Product/ingredient name	Result	Species	Dose	Exposure
Titanium dioxide	LD50 Oral	Rat	>10 g/kg	-

Chronic toxicity

Conclusion/Summary : Not available.

Target organs : Contains material which may cause damage to the following organs: lungs, upper respiratory tract, skin, eyes.

Carcinogenicity

Carcinogenicity : Contains material which can cause cancer. Risk of cancer depends on duration and level of exposure.

Classification

Product/ingredient name	ACGIH	IARC	EPA	NIOSH	NTP	OSHA
Titanium dioxide	A4	2B	-	-	-	-
Quartz (SiO2) (<10 microns)	A2	1	-	+	Proven.	-

Mutagenicity

Mutagenicity : No known significant effects or critical hazards.

Teratogenicity

Teratogenicity : No known significant effects or critical hazards.

Reproductive toxicity

Developmental effects : No known significant effects or critical hazards.

Fertility effects : No known significant effects or critical hazards.

12 . Ecological information

Environmental effects : No known significant effects or critical hazards.

Aquatic ecotoxicity

Product/ingredient name	Result	Species	Exposure
Titanium dioxide	Acute LC50 5.5 ppm Fresh water	Daphnia - Water flea - Daphnia magna	48 hours
	Chronic NOEC 1 ppm Fresh water	Daphnia - Water flea - Daphnia magna	48 hours

13 . Disposal considerations

Waste disposal : The generation of waste should be avoided or minimized wherever possible. Empty containers or liners may retain some product residues. This material and its container must be disposed of in a safe way. Significant quantities of waste product residues should not be disposed of via the foul sewer but processed in a suitable effluent treatment plant. Dispose of surplus and non-recyclable products via a licensed waste disposal contractor. Disposal of this product, solutions and any by-products should at all times comply with the requirements of environmental protection and waste disposal legislation and any regional local authority requirements. Avoid dispersal of spilled material and runoff and contact with soil, waterways, drains and sewers.

Disposal should be in accordance with applicable regional, national and local laws and regulations.

Refer to Section 7: HANDLING AND STORAGE and Section 8: EXPOSURE CONTROLS/PERSONAL PROTECTION for additional handling information and protection of employees. Section 6. Accidental release measures

Powered by ATRION

14 . Transport information

Regulation	UN number	Proper shipping name	Classes	PG*	Additional information
UN	None.	Not regulated.	None.	-	-
IMDG	None.	Not regulated.	None.	-	-
DOT	None.	Not regulated.	None.	-	-

PG* : Packing group

Reportable quantity RQ : CERCLA: Hazardous substances.: No products were found.

15 . Regulatory information

United States inventory (TSCA 8b) : All components are listed or exempted.

Australia inventory (AICS) : Not determined.

Canada inventory (DSL) : At least one component is not listed in DSL but all such components are listed in NDSL.

China inventory (IECSC) : All components are listed or exempted.

Europe inventory (REACH) : Please contact your supplier for information on the inventory status of this material.

Japan inventory (ENCS) : At least one component is not listed.

Korea inventory (KECI) : All components are listed or exempted.

New Zealand (NZIoC) : Not determined.

Philippines inventory (PICCS) : Not determined.

United States

U.S. Federal regulations :

SARA 302/304/311/312 extremely hazardous substances: No products were found.
SARA 302/304 emergency planning and notification: No products were found.
SARA 302/304/311/312 hazardous chemicals: Limestone; Titanium dioxide
CERCLA: Hazardous substances.: No products were found.

SARA 311/312 MSDS Distribution - Chemical Inventory - Hazard Identification:

Chemical name	CAS #	Acute	Chronic	Fire	Reactive	Pressure
Limestone	1317-65-3	N	N	N	N	N
Titanium dioxide	13463-67-7	N	Y	N	N	N
Quartz (SiO2) (<10 microns)	14808-60-7	N	Y	N	N	N
Product as-supplied :		N	Y	N	N	N

Additional environmental information is contained on the Environmental Data Sheet for this product, which can be obtained from your PPG representative.

California Prop. 65

WARNING: This product contains a chemical known to the State of California to cause cancer.

Canada

WHMIS (Canada) : Class D-2A: Material causing other toxic effects (Very toxic).

Mexico

Classification

Flammability : 1 **Health** : 1 **Reactivity** : 0

16 . Other information

Hazardous Material Information System (U.S.A.)

Health : 1 * **Flammability** : 1 **Physical hazards** : 0

(*) - Chronic effects

Powered by ATRION

16 . Other information

Caution: HMIS® ratings are based on a 0-4 rating scale, with 0 representing minimal hazards or risks, and 4 representing significant hazards or risks Although HMIS® ratings are not required on MSDSs under 29 CFR 1910. 1200, the preparer may choose to provide them. HMIS® ratings are to be used with a fully implemented HMIS® program. HMIS® is a registered mark of the National Paint & Coatings Association (NPCA). HMIS® materials may be purchased exclusively from J. J. Keller (800) 327-6868.

The customer is responsible for determining the PPE code for this material.

National Fire Protection Association (U.S.A.)

Health : 1 **Flammability** : 1 **Instability** : 0

Date of previous issue : **7/12/2010.**

Organization that prepared the MSDS : EHS

Indicates information that has changed from previously issued version.

Disclaimer

The information contained in this data sheet is based on present scientific and technical knowledge. The purpose of this information is to draw attention to the health and safety aspects concerning the products supplied by PPG, and to recommend precautionary measures for the storage and handling of the products. No warranty or guarantee is given in respect of the properties of the products. No liability can be accepted for any failure to observe the precautionary measures described in this data sheet or for any misuse of the products.

Powered by ATRION

Material Safety Data Sheet

Date of issue 18 January 2011
Version 14.01

1 . Product and company identification

Product name : PITT-GLAZE BLOCK FILLER

Code : 16-90

Supplier : PPG Industries, Inc.
One PPG Place
Pittsburgh, PA 15272

Emergency telephone number : (412) 434-4515 (U.S.)
(514) 645-1320 (Canada)
01-800-00-21-400 (Mexico)

Technical Phone Number : 1-800-441-9695 (8:00 am to 5:00 pm EST)

2 . Hazards identification

Emergency overview : WARNING!

COMBUSTIBLE LIQUID AND VAPOR. CAUSES RESPIRATORY TRACT IRRITATION. MAY BE HARMFUL IF INHALED OR SWALLOWED. SANDING AND GRINDING DUSTS MAY BE HARMFUL IF INHALED. MAY CAUSE EYE IRRITATION. PROLONGED OR REPEATED CONTACT MAY DRY SKIN AND CAUSE IRRITATION. CONTAINS MATERIAL THAT CAN CAUSE TARGET ORGAN DAMAGE. CANCER HAZARD - CONTAINS MATERIAL WHICH CAN CAUSE CANCER.

Keep away from heat, sparks and flame. Do not breathe vapor or mist. Avoid contact with eyes, skin and clothing. Use only with adequate ventilation. Keep container tightly closed and sealed until ready for use. Wash thoroughly after handling.

Potential acute health effects

Inhalation : May be harmful if inhaled. Severely irritating to the respiratory system. Can irritate eyes, nose, mouth and throat.

Ingestion : May be harmful if swallowed.

Skin : May cause skin dryness and irritation.

Eyes : Moderately irritating to eyes.

Over-exposure signs/symptoms

Repeated exposure to high vapor concentrations may cause irritation of the respiratory system and permanent brain and nervous system damage. Inhalation of vapor/aerosol concentrations above the recommended exposure limits causes headaches, drowsiness and nausea and may lead to unconsciousness or death. There is some evidence that repeated exposure to organic solvent vapors in combination with constant loud noise can cause greater hearing loss than expected from exposure to noise alone. This product contains crystalline silica which can cause lung cancer or silicosis. The risk of cancer depends on the duration and level of exposure to dust from sanding surfaces or mist from spray applications.

Medical conditions aggravated by over-exposure : Pre-existing disorders involving any target organs mentioned in this MSDS as being at risk may be aggravated by over-exposure to this product.

This Material Safety Data Sheet has been prepared in accordance with Canada's Workplace Hazardous Materials Information System (WHMIS) and the OSHA Hazard Communication Standard (29 CFR 1910.1200).

See toxicological information (Section 11)

Powered by ATRION

3 . Composition/information on ingredients

Name	CAS number	%
Limestone	1317-65-3	30 - 60
Talc , not containing asbestiform fibres	14807-96-6	3 - 7
Stoddard solvent	8052-41-3	1 - 5
Titanium dioxide	13463-67-7	1 - 5
Quartz (SiO2) (<10 microns)	14808-60-7	0.1 - 1

There are no additional ingredients present which, within the current knowledge of the supplier and in the concentrations applicable, are classified as hazardous to health or the environment and hence require reporting in this section.

4 . First aid measures

If ingestion, irritation, any type of overexposure or symptoms of overexposure occur during or persists after use of this product, contact a POISON CONTROL CENTER, EMERGENCY ROOM OR PHYSICIAN immediately; have Material Safety Data Sheet information available. Never give anything by mouth to an unconscious or convulsing person.

Eye contact : Check for and remove any contact lenses. Immediately flush eyes with running water for at least 15 minutes, keeping eyelids open. Seek immediate medical attention.

Skin contact : Remove contaminated clothing and shoes. Wash skin thoroughly with soap and water or use recognized skin cleanser. Do NOT use solvents or thinners.

Inhalation : Remove to fresh air. Keep person warm and at rest. If not breathing, if breathing is irregular or if respiratory arrest occurs, provide artificial respiration or oxygen by trained personnel.

Ingestion : If swallowed, seek medical advice immediately and show this container or label. Keep person warm and at rest. Do not induce vomiting.

Notes to physician : No specific treatment. Treat symptomatically. Contact poison treatment specialist immediately if large quantities have been ingested or inhaled.

5 . Fire-fighting measures

Flammability of the product : Combustible liquid. In a fire or if heated, a pressure increase will occur and the container may burst, with the risk of a subsequent explosion.

Extinguishing media

Suitable : Use dry chemical, CO_2, water spray (fog) or foam.

Not suitable : Do not use water jet.

Special exposure hazards : Promptly isolate the scene by removing all persons from the vicinity of the incident if there is a fire. No action shall be taken involving any personal risk or without suitable training. Move containers from fire area if this can be done without risk. Use water spray to keep fire-exposed containers cool.

Hazardous combustion products : Decomposition products may include the following materials:
carbon oxides
metal oxide/oxides

Special protective equipment for fire-fighters : Fire-fighters should wear appropriate protective equipment and self-contained breathing apparatus (SCBA) with a full face-piece operated in positive pressure mode.

6 . Accidental release measures

Personal precautions : No action shall be taken involving any personal risk or without suitable training. Evacuate surrounding areas. Keep unnecessary and unprotected personnel from entering. Do not touch or walk through spilled material. Shut off all ignition sources. No flares, smoking or flames in hazard area. Avoid breathing vapor or mist. Provide adequate ventilation. Wear appropriate respirator when ventilation is inadequate. Put on appropriate personal protective equipment (see Section 8).

Environmental precautions : Avoid dispersal of spilled material and runoff and contact with soil, waterways, drains and sewers. Inform the relevant authorities if the product has caused environmental pollution (sewers, waterways, soil or air).

Powered by ATRION

6 . Accidental release measures

Large spill : Stop leak if without risk. Move containers from spill area. Approach release from upwind. Use spark-proof tools and explosion-proof equipment. Prevent entry into sewers, water courses, basements or confined areas. Wash spillages into an effluent treatment plant or proceed as follows. Contain and collect spillage with non-combustible, absorbent material e.g. sand, earth, vermiculite or diatomaceous earth and place in container for disposal according to local regulations (see section 13). Dispose of via a licensed waste disposal contractor. Contaminated absorbent material may pose the same hazard as the spilled product. Note: see section 1 for emergency contact information and section 13 for waste disposal.

Small spill : Stop leak if without risk. Move containers from spill area. Use spark-proof tools and explosion-proof equipment. Dilute with water and mop up if water-soluble or absorb with an inert dry material and place in an appropriate waste disposal container. Dispose of via a licensed waste disposal contractor.

7 . Handling and storage

Handling : Put on appropriate personal protective equipment (see Section 8). Eating, drinking and smoking should be prohibited in areas where this material is handled, stored and processed. Do not breathe vapor or mist. Do not swallow. Do not get in eyes or on skin or clothing. Use only with adequate ventilation. Wear appropriate respirator when ventilation is inadequate. Do not enter storage areas and confined spaces unless adequately ventilated. Keep in the original container or an approved alternative made from a compatible material, kept tightly closed when not in use. Store and use away from heat, sparks, open flame or any other ignition source. Use explosion-proof electrical (ventilating, lighting and material handling) equipment. Use non-sparking tools. Take precautionary measures against electrostatic discharges. To avoid fire or explosion, dissipate static electricity during transfer by grounding and bonding containers and equipment before transferring material. Empty containers retain product residue and can be hazardous. Do not reuse container. If this material is part of a multiple component system, read the Material Safety Data Sheet(s) for the other component or components before blending as the resulting mixture may have the hazards of all of its parts.

Storage : Store in accordance with local regulations. Store in a segregated and approved area. Store in original container protected from direct sunlight in a dry, cool and well-ventilated area, away from incompatible materials (see section 10) and food and drink. Eliminate all ignition sources. Separate from oxidizing materials. Keep container tightly closed and sealed until ready for use. Containers that have been opened must be carefully resealed and kept upright to prevent leakage. Do not store in unlabeled containers. Use appropriate containment to avoid environmental contamination. Do not store below the following temperature: 32F / 0C.

8 . Exposure controls/personal protection

Name	Result	ACGIH	OSHA	Ontario	Mexico	PPG
Limestone	TWA	Not established	5 mg/m³ R 15 mg/m³ TD	Not established	10 mg/m³	Not established
	STEL	Not established	Not established	Not established	20 mg/m³	Not established
Talc , not containing asbestiform fibres	TWA	2 mg/m³ R	20 mppcf Z	2 mg/m³ R	2 mg/m³ R	Not established
Stoddard solvent	TWA	100 ppm	500 ppm	100 ppm	100 ppm	Not established
	STEL	Not established	Not established	Not established	200 ppm	Not established
Titanium dioxide	TWA	10 mg/m³	15 mg/m³ TD	10 mg/m³ TD	10 mg/m³ (as Ti)	Not established
	STEL	Not	Not	Not	20 mg/m³ (as	Not

Powered by ATRION

8 . Exposure controls/personal protection

		established	established	established	Ti)	established
Quartz (SiO2) (<10 microns)	TWA	0.025 mg/m³ R	10 mg/m³ R Z 30 mg/m³ TD Z 250 mppcf R Z	0.1 mg/m³ R	0.1 mg/m³ R	Not established

Key to abbreviations

A	=	Acceptable Maximum Peak	S	=	Potential skin absorption
ACGIH	=	American Conference of Governmental Industrial Hygienists.	SR	=	Respiratory sensitization
C	=	Ceiling Limit	SS	=	Skin sensitization
F	=	Fume	STEL	=	Short term Exposure limit values
IPEL	=	Internal Permissible Exposure Limit	TD	=	Total dust
OSHA	=	Occupational Safety and Health Administration.	TLV	=	Threshold Limit Value
R	=	Respirable	TWA	=	Time Weighted Average
Z	=	OSHA 29CFR 1910.1200 Subpart Z - Toxic and Hazardous Substances			

Consult local authorities for acceptable exposure limits.

Recommended monitoring procedures : If this product contains ingredients with exposure limits, personal, workplace atmosphere or biological monitoring may be required to determine the effectiveness of the ventilation or other control measures and/or the necessity to use respiratory protective equipment.

Engineering measures : Use only with adequate ventilation. Use process enclosures, local exhaust ventilation or other engineering controls to keep worker exposure to airborne contaminants below any recommended or statutory limits. The engineering controls also need to keep gas, vapor or dust concentrations below any lower explosive limits. Use explosion-proof ventilation equipment.

Hygiene measures : Wash hands, forearms and face thoroughly after handling chemical products, before eating, smoking and using the lavatory and at the end of the working period. Appropriate techniques should be used to remove potentially contaminated clothing. Wash contaminated clothing before reusing. Ensure that eyewash stations and safety showers are close to the workstation location.

Personal protection

Eyes : Safety glasses with side shields.

Hands : Chemical-resistant, impervious gloves complying with an approved standard should be worn at all times when handling chemical products if a risk assessment indicates this is necessary.

Gloves : For prolonged or repeated handling, use the following type of gloves:

Recommended: nitrile rubber, foil, fluor rubber

Respiratory : If workers are exposed to concentrations above the exposure limit, they must use appropriate, certified respirators. Use a properly fitted, air-purifying or air-fed respirator complying with an approved standard if a risk assessment indicates this is necessary. Respirator selection must be based on known or anticipated exposure levels, the hazards of the product and the safe working limits of the selected respirator.

Skin : Personal protective equipment for the body should be selected based on the task being performed and the risks involved and should be approved by a specialist before handling this product.

Environmental exposure controls : Emissions from ventilation or work process equipment should be checked to ensure they comply with the requirements of environmental protection legislation. In some cases, fume scrubbers, filters or engineering modifications to the process equipment will be necessary to reduce emissions to acceptable levels.

Powered by ATRION

9 . Physical and chemical properties

Physical state	:	Liquid.
Flash point	:	Closed cup: 54.44°C (130°F)
Color	:	Not available.
Odor	:	Not available.
pH	:	Not available.
Boiling/condensation point	:	>37.78°C (>100°F)
Melting/freezing point	:	Not available.
Specific gravity	:	1.52
Density (lbs / gal)	:	12.69
Vapor pressure	:	2.3 kPa (17.4 mm Hg) [20°C]
Vapor density	:	Not available.
Volatility	:	48% (v/v), 30.36% (w/w)
Odor threshold	:	Not available.
Evaporation rate	:	31 (butyl acetate = 1)
Partition coefficient: n-octanol/water	:	Not available.
% Solid. (w/w)	:	69.64

10 . Stability and reactivity

Stability	:	Stable under recommended storage and handling conditions (see section 7).
Conditions to avoid	:	Avoid all possible sources of ignition (spark or flame). Do not pressurize, cut, weld, braze, solder, drill, grind or expose containers to heat or sources of ignition.
Materials to avoid	:	Reactive or incompatible with the following materials:,acids,oxidizing materials,strong alkalis
Hazardous decomposition products	:	Under normal conditions of storage and use, hazardous decomposition products should not be produced.
Hazardous polymerization	:	Under normal conditions of storage and use, hazardous polymerization will not occur.

11 . Toxicological information

Acute toxicity

Product/ingredient name	Result	Species	Dose	Exposure
Stoddard solvent	LD50 Oral	Rat	>5 g/kg	-
Titanium dioxide	LD50 Oral	Rat	>10 g/kg	-

Chronic toxicity

Conclusion/Summary	:	Not available.
Defatting irritant?	:	Prolonged or repeated contact can defat the skin and lead to irritation, cracking and/or dermatitis.
Target organs	:	Contains material which causes damage to the following organs: brain. Contains material which may cause damage to the following organs: kidneys, lungs, cardiovascular system, upper respiratory tract, skin, eyes, central nervous system (CNS).

Carcinogenicity

Carcinogenicity	:	Contains material which can cause cancer. Risk of cancer depends on duration and level of exposure.

Classification

Product/ingredient name	ACGIH	IARC	EPA	NIOSH	NTP	OSHA
Talc , not containing asbestiform fibres	A4	3	-	-	-	-
Titanium dioxide	A4	2B	-	-	-	-
Quartz (SiO2) (<10 microns)	A2	1	-	+	Proven.	-

Powered by ATRION

11 . Toxicological information

Mutagenicity

Mutagenicity : No known significant effects or critical hazards.

Teratogenicity

Teratogenicity : No known significant effects or critical hazards.

Reproductive toxicity

Developmental effects : No known significant effects or critical hazards.

Fertility effects : No known significant effects or critical hazards.

12 . Ecological information

Environmental effects : No known significant effects or critical hazards.

Aquatic ecotoxicity

Product/ingredient name	Result	Species	Exposure
Titanium dioxide	Acute LC50 5.5 ppm Fresh water	Daphnia - Water flea - Daphnia magna	48 hours
	Chronic NOEC 1 ppm Fresh water	Daphnia - Water flea - Daphnia magna	48 hours

13 . Disposal considerations

Waste disposal : The generation of waste should be avoided or minimized wherever possible. Significant quantities of waste product residues should not be disposed of via the foul sewer but processed in a suitable effluent treatment plant. Dispose of surplus and non-recyclable products via a licensed waste disposal contractor. Disposal of this product, solutions and any by-products should at all times comply with the requirements of environmental protection and waste disposal legislation and any regional local authority requirements. Waste packaging should be recycled. Incineration or landfill should only be considered when recycling is not feasible. This material and its container must be disposed of in a safe way. Care should be taken when handling emptied containers that have not been cleaned or rinsed out. Empty containers or liners may retain some product residues. Vapor from product residues may create a highly flammable or explosive atmosphere inside the container. Do not cut, weld or grind used containers unless they have been cleaned thoroughly internally. Avoid dispersal of spilled material and runoff and contact with soil, waterways, drains and sewers.

Disposal should be in accordance with applicable regional, national and local laws and regulations.

Refer to Section 7: HANDLING AND STORAGE and Section 8: EXPOSURE CONTROLS/PERSONAL PROTECTION for additional handling information and protection of employees. Section 6. Accidental release measures

14 . Transport information

Regulation	UN number	Proper shipping name	Classes	PG*	Additional information
UN	1263	PAINT	3	III	-
IMDG	1263	PAINT	3	III	-
DOT	1263	PAINT	Combustible liquid.	III	**Remarks** USA Only: Can be reclassified as Combustible Liquid. Non-Bulk highway shipments (Less than or Equal to 450Liters) can be shipped as non-regulated.

PG* : Packing group

Reportable quantity RQ : CERCLA: Hazardous substances.: No products were found.

Powered by ATRION

15 . Regulatory information

United States inventory (TSCA 8b) : All components are listed or exempted.
Australia inventory (AICS) : All components are listed or exempted.
Canada inventory (DSL) : All components are listed or exempted.
China inventory (IECSC) : All components are listed or exempted.
Europe inventory (REACH) : Please contact your supplier for information on the inventory status of this material.
Japan inventory (ENCS) : All components are listed or exempted.
Korea inventory (KECI) : All components are listed or exempted.
New Zealand (NZIoC) : At least one component is not listed.
Philippines inventory (PICCS) : All components are listed or exempted.

United States

U.S. Federal regulations :

SARA 302/304/311/312 extremely hazardous substances: No products were found.
SARA 302/304 emergency planning and notification: No products were found.
SARA 302/304/311/312 hazardous chemicals: Talc , not containing asbestiform fibres; Limestone; Titanium dioxide; Stoddard solvent
CERCLA: Hazardous substances.: No products were found.

SARA 311/312 MSDS Distribution - Chemical Inventory - Hazard Identification:

Chemical name	CAS #	Acute	Chronic	Fire	Reactive	Pressure
Limestone	1317-65-3	N	N	N	N	N
Talc , not containing asbestiform fibres	14807-96-6	Y	N	N	N	N
Stoddard solvent	8052-41-3	Y	N	Y	N	N
Titanium dioxide	13463-67-7	N	Y	N	N	N
Quartz (SiO2) (<10 microns)	14808-60-7	N	Y	N	N	N
Product as-supplied :		Y	Y	Y	N	N

Additional environmental information is contained on the Environmental Data Sheet for this product, which can be obtained from your PPG representative.

California Prop. 65

WARNING: This product contains a chemical known to the State of California to cause cancer.

Canada

WHMIS (Canada) : Class B-3: Combustible liquid with a flash point between 37.8°C (100°F) and 93.3°C (200°F). Class D-2A: Material causing other toxic effects (Very toxic). Class D-2B: Material causing other toxic effects (Toxic).

Mexico

Classification

Flammability : 2 **Health** : 2 **Reactivity** : 0

16 . Other information

Hazardous Material Information System (U.S.A.)

Health : 2 * **Flammability** : 2 **Physical hazards** : 0
(*) - Chronic effects

Caution: HMIS® ratings are based on a 0-4 rating scale, with 0 representing minimal hazards or risks, and 4 representing significant hazards or risks Although HMIS® ratings are not required on MSDSs under 29 CFR 1910.1200, the preparer may choose to provide them. HMIS® ratings are to be used with a fully implemented HMIS® program. HMIS® is a registered mark of the National Paint & Coatings Association (NPCA). HMIS® materials may be purchased exclusively from J. J. Keller (800) 327-6868.

The customer is responsible for determining the PPE code for this material.

National Fire Protection Association (U.S.A.)

Health : 2 **Flammability** : 2 **Instability** : 0

Powered by ATRION

16 . Other information

Date of previous issue : **11/12/2010.**

Organization that prepared the MSDS : EHS

Indicates information that has changed from previously issued version.

Disclaimer

The information contained in this data sheet is based on present scientific and technical knowledge. The purpose of this information is to draw attention to the health and safety aspects concerning the products supplied by PPG, and to recommend precautionary measures for the storage and handling of the products. No warranty or guarantee is given in respect of the properties of the products. No liability can be accepted for any failure to observe the precautionary measures described in this data sheet or for any misuse of the products.

Powered by ATRION

Material Safety Data Sheet

Date of issue 25 June 2010
Version 2

1 . Product and company identification

Product name : SEAL GRIP STAIN BLOCKING PRIMER

Code : 17-921/01

Supplier : PPG Industries, Inc.
One PPG Place
Pittsburgh, PA 15272

Emergency telephone number : (412) 434-4515 (U.S.)
(514) 645-1320 (Canada)
01-800-00-21-400 (Mexico)

Technical Phone Number : 1-800-441-9695 (8:00 am to 5:00 pm EST)

2 . Hazards identification

Emergency overview : WARNING!

CAUSES RESPIRATORY TRACT AND EYE IRRITATION. MAY BE HARMFUL IF INHALED OR SWALLOWED. SANDING AND GRINDING DUSTS MAY BE HARMFUL IF INHALED. PROLONGED OR REPEATED CONTACT MAY DRY SKIN AND CAUSE IRRITATION. CONTAINS MATERIAL THAT CAN CAUSE TARGET ORGAN DAMAGE. CANCER HAZARD - CONTAINS MATERIAL WHICH CAN CAUSE CANCER.

Do not breathe vapor or mist. Avoid contact with eyes, skin and clothing. Use only with adequate ventilation. Keep container tightly closed and sealed until ready for use. Wash thoroughly after handling.

Potential acute health effects

Inhalation : May be harmful if inhaled. Severely irritating to the respiratory system. Can irritate eyes, nose, mouth and throat.

Ingestion : May be harmful if swallowed.

Skin : May cause skin dryness and irritation.

Eyes : Irritating to eyes.

Over-exposure signs/symptoms

This product contains crystalline silica which can cause lung cancer or silicosis. The risk of cancer depends on the duration and level of exposure to dust from sanding surfaces or mist from spray applications.

Medical conditions aggravated by over-exposure : Pre-existing disorders involving any target organs mentioned in this MSDS as being at risk may be aggravated by over-exposure to this product.

This Material Safety Data Sheet has been prepared in accordance with Canada's Workplace Hazardous Materials Information System (WHMIS) and the OSHA Hazard Communication Standard (29 CFR 1910.1200).

See toxicological information (section 11)

3 . Composition/information on ingredients

Name	CAS number	%

Powered by ATRION

3 . Composition/information on ingredients

Limestone	1317-65-3	5 - 10
titanium dioxide	13463-67-7	5 - 10
Talc , not containing asbestiform fibres	14807-96-6	5 - 10
ethanediol	107-21-1	1 - 5
zinc oxide	1314-13-2	0.5 - 1.5
silicon dioxide	7631-86-9	0.5 - 1.5
Quartz (SiO2)	14808-60-7	0.1 - 1

There are no additional ingredients present which, within the current knowledge of the supplier and in the concentrations applicable, are classified as hazardous to health or the environment and hence require reporting in this section.

4 . First aid measures

If ingestion, irritation, any type of overexposure or symptoms of overexposure occur during or persists after use of this product, contact a POISON CONTROL CENTER, EMERGENCY ROOM OR PHYSICIAN immediately; have Material Safety Data Sheet information available. Never give anything by mouth to an unconscious or convulsing person.

Eye contact : Check for and remove any contact lenses. Immediately flush eyes with running water for at least 15 minutes, keeping eyelids open.

Skin contact : Remove contaminated clothing and shoes. Wash skin thoroughly with soap and water or use recognized skin cleanser. Do NOT use solvents or thinners.

Inhalation : Remove to fresh air. Keep person warm and at rest. If not breathing, if breathing is irregular or if respiratory arrest occurs, provide artificial respiration or oxygen by trained personnel.

Ingestion : If swallowed, seek medical advice immediately and show this container or label. Keep person warm and at rest. Do not induce vomiting.

Notes to physician : No specific treatment. Treat symptomatically. Contact poison treatment specialist immediately if large quantities have been ingested or inhaled.

5 . Fire-fighting measures

Flammability of the product : In a fire or if heated, a pressure increase will occur and the container may burst.

Extinguishing media

Suitable : Use an extinguishing agent suitable for the surrounding fire.

Not suitable : None known.

Special exposure hazards : Promptly isolate the scene by removing all persons from the vicinity of the incident if there is a fire. No action shall be taken involving any personal risk or without suitable training.

Hazardous combustion products : Decomposition products may include the following materials:
carbon oxides
metal oxide/oxides

Special protective equipment for fire-fighters : Fire-fighters should wear appropriate protective equipment and self-contained breathing apparatus (SCBA) with a full face-piece operated in positive pressure mode.

6 . Accidental release measures

Personal precautions : No action shall be taken involving any personal risk or without suitable training. Evacuate surrounding areas. Keep unnecessary and unprotected personnel from entering. Do not touch or walk through spilled material. Avoid breathing vapor or mist. Provide adequate ventilation. Wear appropriate respirator when ventilation is inadequate. Put on appropriate personal protective equipment (see section 8).

Environmental precautions : Avoid dispersal of spilled material and runoff and contact with soil, waterways, drains and sewers. Inform the relevant authorities if the product has caused environmental pollution (sewers, waterways, soil or air).

Powered by ATRION

6 . Accidental release measures

Large spill : Stop leak if without risk. Move containers from spill area. Approach release from upwind. Prevent entry into sewers, water courses, basements or confined areas. Wash spillages into an effluent treatment plant or proceed as follows. Contain and collect spillage with non-combustible, absorbent material e.g. sand, earth, vermiculite or diatomaceous earth and place in container for disposal according to local regulations (see section 13). Dispose of via a licensed waste disposal contractor. Contaminated absorbent material may pose the same hazard as the spilled product. Note: see section 1 for emergency contact information and section 13 for waste disposal.

Small spill : Stop leak if without risk. Move containers from spill area. Dilute with water and mop up if water-soluble or absorb with an inert dry material and place in an appropriate waste disposal container. Dispose of via a licensed waste disposal contractor.

7 . Handling and storage

Handling : Put on appropriate personal protective equipment (see section 8). Eating, drinking and smoking should be prohibited in areas where this material is handled, stored and processed. Do not breathe vapor or mist. Do not swallow. Do not get in eyes or on skin or clothing. Use only with adequate ventilation. Wear appropriate respirator when ventilation is inadequate. Keep in the original container or an approved alternative made from a compatible material, kept tightly closed when not in use. Empty containers retain product residue and can be hazardous. Do not reuse container. If this material is part of a multiple component system, read the Material Safety Data Sheet(s) for the other component or components before blending as the resulting mixture may have the hazards of all of its parts.

Storage : Store in accordance with local regulations. Store in original container protected from direct sunlight in a dry, cool and well-ventilated area, away from incompatible materials (see section 10) and food and drink. Keep container tightly closed and sealed until ready for use. Containers that have been opened must be carefully resealed and kept upright to prevent leakage. Do not store in unlabeled containers. Use appropriate containment to avoid environmental contamination. Do not store below the following temperature: 32F / 0C.

8 . Exposure controls/personal protection

Name	Result	ACGIH	OSHA	Ontario	Mexico	PPG
Limestone	TWA	Not established	5 mg/m³ R 15 mg/m³ TD	Not established	10 mg/m³	Not established
	STEL	Not established	Not established	Not established	20 mg/m³	Not established
titanium dioxide	TWA	10 mg/m³	15 mg/m³ TD	10 mg/m³ TD	10 mg/m³ (as Ti)	Not established
	STEL	Not established	Not established	Not established	20 mg/m³ (as Ti)	Not established
Talc , not containing asbestiform fibres	TWA	2 mg/m³ R	20 mppcf Z	2 mg/m³ R TD	2 mg/m³	Not established
ethanediol	STEL	100 mg/m³ C	Not established	100 mg/m³ C	100 mg/m³ C	Not established
zinc oxide	TWA	2 mg/m³	5 mg/m³ F 5 mg/m³ R 15 mg/m³ TD	2 mg/m³ R TD	10 mg/m³ 5 mg/m³	Not established
	STEL	10 mg/m³	Not established	10 mg/m³ R TD	10 mg/m³	Not established
silicon dioxide	TWA	Not	Not	Not	10 mg/m³	Not

Powered by ATRION

8 . Exposure controls/personal protection

		established	established	established	3 mg/m³ R	established
Quartz (SiO2)	TWA	0.025 mg/m³ R	10 mg/m³ R Z 30 mg/m³ TD Z 250 mppcf R Z	Not established	0.1 mg/m³	Not established

Key to abbreviations

A	=	Acceptable Maximum Peak	S	=	Potential skin absorption
ACGIH	=	American Conference of Governmental Industrial Hygienists.	SR	=	Respiratory sensitization
C	=	Ceiling Limit	SS	=	Skin sensitization
F	=	Fume	TD	=	Total dust
IPEL	=	Internal Permissible Exposure Limit	TLV	=	Threshold Limit Value
OSHA	=	Occupational Safety and Health Administration.	TWA	=	Time Weighted Average
R	=	Respirable	Z	=	OSHA 29CFR 1910.1200 Subpart Z - Toxic and Hazardous Substances

Consult local authorities for acceptable exposure limits.

Recommended monitoring procedures : If this product contains ingredients with exposure limits, personal, workplace atmosphere or biological monitoring may be required to determine the effectiveness of the ventilation or other control measures and/or the necessity to use respiratory protective equipment.

Engineering measures : Use only with adequate ventilation. If user operations generate dust, fumes, gas, vapor or mist, use process enclosures, local exhaust ventilation or other engineering controls to keep worker exposure to airborne contaminants below any recommended or statutory limits.

Hygiene measures : Wash hands, forearms and face thoroughly after handling chemical products, before eating, smoking and using the lavatory and at the end of the working period. Appropriate techniques should be used to remove potentially contaminated clothing. Wash contaminated clothing before reusing. Ensure that eyewash stations and safety showers are close to the workstation location.

Personal protection

Eyes : Safety glasses with side shields.

Hands : Chemical-resistant, impervious gloves complying with an approved standard should be worn at all times when handling chemical products if a risk assessment indicates this is necessary.

Respiratory : If workers are exposed to concentrations above the exposure limit, they must use appropriate, certified respirators. Use a properly fitted, air-purifying or air-fed respirator complying with an approved standard if a risk assessment indicates this is necessary. Respirator selection must be based on known or anticipated exposure levels, the hazards of the product and the safe working limits of the selected respirator.

Skin : Personal protective equipment for the body should be selected based on the task being performed and the risks involved and should be approved by a specialist before handling this product.

Environmental exposure controls : Emissions from ventilation or work process equipment should be checked to ensure they comply with the requirements of environmental protection legislation. In some cases, fume scrubbers, filters or engineering modifications to the process equipment will be necessary to reduce emissions to acceptable levels.

Powered by ATRION

9 . Physical and chemical properties

Physical state	:	Liquid.
Flash point	:	Closed cup: Not applicable.
Color	:	Not available.
Odor	:	Not available.
pH	:	Not available.
Boiling/condensation point	:	>37.78°C (>100°F)
Melting/freezing point	:	Not available.
Specific gravity	:	1.29
Density (lbs / gal)	:	10.77
Vapor pressure	:	2.3 kPa (17.2 mm Hg)
Vapor density	:	Not available.
Volatility	:	62% (v/v), 48.32% (w/w)
Odor threshold	:	Not available.
Evaporation rate	:	34 (butyl acetate = 1)
Octanol/water partition coefficient	:	Not available.
% Solid. (w/w)	:	51.68

10 . Stability and reactivity

Stability	:	Stable under recommended storage and handling conditions (see section 7).
Conditions to avoid	:	No specific data.
Materials to avoid	:	Reactive or incompatible with the following materials:,acids
Hazardous decomposition products	:	Under normal conditions of storage and use, hazardous decomposition products should not be produced.
Hazardous polymerization	:	Under normal conditions of storage and use, hazardous polymerization will not occur.

11 . Toxicological information

Acute toxicity

Product/ingredient name	Result	Species	Dose	Exposure
titanium dioxide	LD50 Oral	Rat	>10 g/kg	-
ethanediol	LD50 Oral	Rat	4700 mg/kg	-
	LD50 Dermal	Rabbit	9.53 g/kg	-

Conclusion/Summary : Not available.

Chronic toxicity

Conclusion/Summary : Not available.

Defatting irritant? : Prolonged or repeated contact can defat the skin and lead to irritation, cracking and/or dermatitis.

Target organs : Contains material which causes damage to the following organs: kidneys, lungs, skin. Contains material which may cause damage to the following organs: cardiovascular system, upper respiratory tract, eyes, central nervous system (CNS).

Carcinogenicity

Carcinogenicity : Contains material which can cause cancer. Risk of cancer depends on duration and level of exposure.

Classification

Product/ingredient name	ACGIH	IARC	EPA	NIOSH	NTP	OSHA

Powered by ATRION

11 . Toxicological information

titanium dioxide	A4	2B	-	-	-	-
Talc , not containing asbestiform fibres	A4	3	-	-	-	-
ethanediol	A4	-	-	-	-	-
zinc oxide	A4	-	-	-	-	-
silicon dioxide	-	3	-	-	-	-
Quartz (SiO2)	A2	1	-	+	Proven.	-

Mutagenicity

Mutagenicity : No known significant effects or critical hazards.

Teratogenicity

Teratogenicity : Contains material which may cause birth defects, based on animal data.

Reproductive toxicity

Developmental effects : No known significant effects or critical hazards.

Fertility effects : No known significant effects or critical hazards.

12 . Ecological information

Environmental effects : No known significant effects or critical hazards.

Aquatic ecotoxicity

Product/ingredient name	Result	Species	Exposure
titanium dioxide	Acute LC50 5.5 ppm Fresh water	Daphnia - Water flea - Daphnia magna	48 hours
	Chronic NOEC 1 ppm Fresh water	Daphnia - Water flea - Daphnia magna	48 hours
ethanediol	Acute LC50 8050000 ug/L Fresh water	Fish - Fathead minnow - Pimephales promelas	96 hours
	Acute LC50 >10000000 ug/L Fresh water	Daphnia - Water flea - Daphnia magna	48 hours
	Chronic NOEC 6090000 ug/L Fresh water	Fish - Fathead minnow - Pimephales promelas	96 hours
zinc oxide	Acute LC50 1.1 to 2.5 ppm Fresh water	Fish - Rainbow trout,donaldson trout - Oncorhynchus mykiss	96 hours
	Acute LC50 98 ug/L Fresh water	Daphnia - Water flea - Daphnia magna	48 hours

13 . Disposal considerations

Waste disposal : The generation of waste should be avoided or minimized wherever possible. Empty containers or liners may retain some product residues. This material and its container must be disposed of in a safe way. Dispose of surplus and non-recyclable products via a licensed waste disposal contractor. Disposal of this product, solutions and any by-products should at all times comply with the requirements of environmental protection and waste disposal legislation and any regional local authority requirements. Avoid dispersal of spilled material and runoff and contact with soil, waterways, drains and sewers.

Disposal should be in accordance with applicable regional, national and local laws and regulations.

Refer to Section 7: HANDLING AND STORAGE and Section 8: EXPOSURE CONTROLS/PERSONAL PROTECTION for additional handling information and protection of employees. Section 6. Accidental release measures

Powered by ATRION

14 . Transport information

Regulation	UN number	Proper shipping name	Classes	PG*	Additional information
UN	None.	Not regulated.	None.	-	-
IMDG	None.	Not regulated.	None.	-	-
DOT	None.	Not regulated.	None.	-	-

PG* : Packing group

Reportable quantity RQ : CERCLA: Hazardous substances.: ethanediol: 5000 lbs. (2270 kg); zinc oxide;

15 . Regulatory information

United States inventory (TSCA 8b) : All components are listed or exempted.
Australia inventory (AICS) : All components are listed or exempted.
Canada inventory (DSL) : All components are listed or exempted.
China inventory (IECSC) : All components are listed or exempted.
Europe inventory (REACH) : Please contact your supplier for information on the inventory status of this material.
Japan inventory (ENCS) : At least one component is not listed.
Korea inventory (KECI) : All components are listed or exempted.
New Zealand (NZIoC) : At least one component is not listed.
Philippines inventory (PICCS) : All components are listed or exempted.

United States

U.S. Federal regulations : **TSCA 12(b) annual export notification**: No products were found.
TSCA 12(b) one-time export: No products were found.
SARA 302/304/311/312 extremely hazardous substances: No products were found.
SARA 302/304 emergency planning and notification: No products were found.
SARA 302/304/311/312 hazardous chemicals: Talc , not containing asbestiform fibres; ethanediol; zinc oxide; titanium dioxide; Limestone
SARA 311/312 MSDS distribution - chemical inventory - hazard identification: Talc , not containing asbestiform fibres: Immediate (acute) health hazard; ethanediol: Immediate (acute) health hazard, Delayed (chronic) health hazard; zinc oxide: Immediate (acute) health hazard, Delayed (chronic) health hazard; titanium dioxide: Immediate (acute) health hazard; Limestone: Immediate (acute) health hazard

CERCLA: Hazardous substances.: ethanediol: 5000 lbs. (2270 kg); zinc oxide;

SARA 313
Form R - Reporting requirements :

Product name	CAS number	Concentration
ethanediol	107-21-1	1 - 5
zinc oxide	1314-13-2	0.5 - 1.5

Additional environmental information is contained on the Environmental Data Sheet for this product, which can be obtained from your PPG representative.

California Prop. 65

WARNING: This product contains a chemical known to the State of California to cause cancer.

Canada

WHMIS (Canada) : Class D-2A: Material causing other toxic effects (Very toxic). Class D-2B: Material causing other toxic effects (Toxic).

Mexico

Classification

Flammability : 0 **Health** : 2 **Reactivity** : 0

Powered by ATRION

16 . Other information

Hazardous Material Information System (U.S.A.)

Health : 2 * **Flammability** : 0 **Physical hazards** : 0
(*) - Chronic effects

Caution: HMIS® ratings are based on a 0-4 rating scale, with 0 representing minimal hazards or risks, and 4 representing significant hazards or risks Although HMIS® ratings are not required on MSDSs under 29 CFR 1910.1200, the preparer may choose to provide them. HMIS® ratings are to be used with a fully implemented HMIS® program. HMIS® is a registered mark of the National Paint & Coatings Association (NPCA). HMIS® materials may be purchased exclusively from J. J. Keller (800) 327-6868.

The customer is responsible for determining the PPE code for this material.

National Fire Protection Association (U.S.A.)

Health : 2 **Flammability** : 0 **Instability** : 0

Date of previous issue : **6/3/2010.**

Organization that prepared the MSDS : EHS

◤ **Indicates information that has changed from previously issued version.**

Disclaimer

The information contained in this data sheet is based on present scientific and technical knowledge. The purpose of this information is to draw attention to the health and safety aspects concerning the products supplied by PPG, and to recommend precautionary measures for the storage and handling of the products. No warranty or guarantee is given in respect of the properties of the products. No liability can be accepted for any failure to observe the precautionary measures described in this data sheet or for any misuse of the products.

Powered by ATRION

Material Safety Data Sheet

Date of issue 20 May 2011
Version 12

1 . Product and company identification

Product name : PITT-TECH GLOSS ACRYLIC ENAMEL
Code : 90-330
Supplier : PPG Industries, Inc.
One PPG Place
Pittsburgh, PA 15272
Emergency telephone number : (412) 434-4515 (U.S.)
(514) 645-1320 (Canada)
01-800-00-21-400 (Mexico)
Technical Phone Number : (412) 492-5200 (ALLISON PARK, PA) 8:00 a.m. - 5:00 p.m. EST

2 . Hazards identification

Emergency overview : WARNING!

HARMFUL IF ABSORBED THROUGH SKIN. MAY BE HARMFUL IF INHALED OR SWALLOWED. SANDING AND GRINDING DUSTS MAY BE HARMFUL IF INHALED. MAY CAUSE EYE IRRITATION. CONTAINS MATERIAL THAT MAY CAUSE TARGET ORGAN DAMAGE, BASED ON ANIMAL DATA.

Do not get in eyes or on skin or clothing. Use only with adequate ventilation. Keep container tightly closed and sealed until ready for use. Wash thoroughly after handling.

Potential acute health effects

Inhalation : May be harmful if inhaled. Exposure to decomposition products may cause a health hazard. Serious effects may be delayed following exposure.
Ingestion : May be harmful if swallowed.
Skin : Toxic in contact with skin.
Eyes : Moderately irritating to eyes.

Over-exposure signs/symptoms

Inhalation : No specific data.
Ingestion : No specific data.
Skin : No specific data.
Eyes : Adverse symptoms may include the following:
irritation
watering
redness

Medical conditions aggravated by over-exposure : Pre-existing disorders involving any target organs mentioned in this MSDS as being at risk may be aggravated by over-exposure to this product.

This Material Safety Data Sheet has been prepared in accordance with Canada's Workplace Hazardous Materials Information System (WHMIS) and the OSHA Hazard Communication Standard (29 CFR 1910.1200).

See toxicological information (Section 11)

3 . Composition/information on ingredients

Name	CAS number	%
Titanium dioxide	13463-67-7	5 - 10
diethylene glycol monomethyl ether	111-77-3	1 - 5

There are no additional ingredients present which, within the current knowledge of the supplier and in the concentrations applicable, are classified as hazardous to health or the environment and hence require reporting in this section.

Powered by ATRION

4 . First aid measures

If ingestion, irritation, any type of overexposure or symptoms of overexposure occur during or persists after use of this product, contact a POISON CONTROL CENTER, EMERGENCY ROOM OR PHYSICIAN immediately; have Material Safety Data Sheet information available. Never give anything by mouth to an unconscious or convulsing person.

Eye contact : Check for and remove any contact lenses. Immediately flush eyes with running water for at least 15 minutes, keeping eyelids open. Seek immediate medical attention.

Skin contact : Remove contaminated clothing and shoes. Wash skin thoroughly with soap and water or use recognized skin cleanser. Do NOT use solvents or thinners.

Inhalation : Remove to fresh air. Keep person warm and at rest. If not breathing, if breathing is irregular or if respiratory arrest occurs, provide artificial respiration or oxygen by trained personnel.

Ingestion : If swallowed, seek medical advice immediately and show this container or label. Keep person warm and at rest. Do not induce vomiting.

Notes to physician : In case of inhalation of decomposition products in a fire, symptoms may be delayed. The exposed person may need to be kept under medical surveillance for 48 hours.

5 . Fire-fighting measures

Flammability of the product : In a fire or if heated, a pressure increase will occur and the container may burst.

Extinguishing media

Suitable : Use an extinguishing agent suitable for the surrounding fire.

Not suitable : None known.

Special exposure hazards : Promptly isolate the scene by removing all persons from the vicinity of the incident if there is a fire. No action shall be taken involving any personal risk or without suitable training.

Hazardous combustion products : Decomposition products may include the following materials:
carbon oxides
nitrogen oxides
metal oxide/oxides

Special protective equipment for fire-fighters : Fire-fighters should wear appropriate protective equipment and self-contained breathing apparatus (SCBA) with a full face-piece operated in positive pressure mode.

6 . Accidental release measures

Personal precautions : No action shall be taken involving any personal risk or without suitable training. Evacuate surrounding areas. Keep unnecessary and unprotected personnel from entering. Do not touch or walk through spilled material. Avoid breathing vapor or mist. Provide adequate ventilation. Wear appropriate respirator when ventilation is inadequate. Put on appropriate personal protective equipment (see Section 8).

Environmental precautions : Avoid dispersal of spilled material and runoff and contact with soil, waterways, drains and sewers. Inform the relevant authorities if the product has caused environmental pollution (sewers, waterways, soil or air).

Large spill : Stop leak if without risk. Move containers from spill area. Approach release from upwind. Prevent entry into sewers, water courses, basements or confined areas. Wash spillages into an effluent treatment plant or proceed as follows. Contain and collect spillage with non-combustible, absorbent material e.g. sand, earth, vermiculite or diatomaceous earth and place in container for disposal according to local regulations (see section 13). Dispose of via a licensed waste disposal contractor. Contaminated absorbent material may pose the same hazard as the spilled product. Note: see section 1 for emergency contact information and section 13 for waste disposal.

Small spill : Stop leak if without risk. Move containers from spill area. Dilute with water and mop up if water-soluble or absorb with an inert dry material and place in an appropriate waste disposal container. Dispose of via a licensed waste disposal contractor.

Powered by ATRION

7 . Handling and storage

Handling : Put on appropriate personal protective equipment (see Section 8). Eating, drinking and smoking should be prohibited in areas where this material is handled, stored and processed. Do not swallow. Do not get in eyes or on skin or clothing. Avoid breathing vapor or mist. If during normal use the material presents a respiratory hazard, use only with adequate ventilation or wear appropriate respirator. Keep in the original container or an approved alternative made from a compatible material, kept tightly closed when not in use. Empty containers retain product residue and can be hazardous. Do not reuse container. If this material is part of a multiple component system, read the Material Safety Data Sheet(s) for the other component or components before blending as the resulting mixture may have the hazards of all of its parts.

Storage : Store in accordance with local regulations. Store in original container protected from direct sunlight in a dry, cool and well-ventilated area, away from incompatible materials (see section 10) and food and drink. Keep container tightly closed and sealed until ready for use. Containers that have been opened must be carefully resealed and kept upright to prevent leakage. Do not store in unlabeled containers. Use appropriate containment to avoid environmental contamination. Do not store below the following temperature: 32F / 0C.

8 . Exposure controls/personal protection

Name	Result	ACGIH	OSHA	Ontario	Mexico	PPG
Titanium dioxide	TWA	10 mg/m³	15 mg/m³ TD	10 mg/m³ TD	10 mg/m³ (as Ti)	Not established
	STEL	Not established	Not established	Not established	20 mg/m³ (as Ti)	Not established
diethylene glycol monomethyl ether	TWA	Not established	Not established	Not established	Not established	30 ppm

Key to abbreviations

A	= Acceptable Maximum Peak	S	= Potential skin absorption
ACGIH	= American Conference of Governmental Industrial Hygienists.	SR	= Respiratory sensitization
C	= Ceiling Limit	SS	= Skin sensitization
F	= Fume	STEL	= Short term Exposure limit values
IPEL	= Internal Permissible Exposure Limit	TD	= Total dust
OSHA	= Occupational Safety and Health Administration.	TLV	= Threshold Limit Value
R	= Respirable	TWA	= Time Weighted Average
Z	= OSHA 29CFR 1910.1200 Subpart Z - Toxic and Hazardous Substances		

Consult local authorities for acceptable exposure limits.

Recommended monitoring procedures : If this product contains ingredients with exposure limits, personal, workplace atmosphere or biological monitoring may be required to determine the effectiveness of the ventilation or other control measures and/or the necessity to use respiratory protective equipment.

Engineering measures : If user operations generate dust, fumes, gas, vapor or mist, use process enclosures, local exhaust ventilation or other engineering controls to keep worker exposure to airborne contaminants below any recommended or statutory limits.

Hygiene measures : Wash hands, forearms and face thoroughly after handling chemical products, before eating, smoking and using the lavatory and at the end of the working period. Appropriate techniques should be used to remove potentially contaminated clothing. Wash contaminated clothing before reusing. Ensure that eyewash stations and safety showers are close to the workstation location.

Personal protection

Eyes : Safety glasses with side shields.

Hands : Chemical-resistant, impervious gloves complying with an approved standard should be worn at all times when handling chemical products if a risk assessment indicates this is necessary.

Respiratory : If workers are exposed to concentrations above the exposure limit, they must use appropriate, certified respirators. Use a properly fitted, air-purifying or air-fed respirator complying with an approved standard if a risk assessment indicates this is necessary. Respirator selection must be based on known or anticipated exposure levels, the hazards of the product and the safe working limits of the selected respirator.

Powered by ATRION

8 . Exposure controls/personal protection

Skin : Personal protective equipment for the body should be selected based on the task being performed and the risks involved and should be approved by a specialist before handling this product.

Environmental exposure controls : Emissions from ventilation or work process equipment should be checked to ensure they comply with the requirements of environmental protection legislation. In some cases, fume scrubbers, filters or engineering modifications to the process equipment will be necessary to reduce emissions to acceptable levels.

9 . Physical and chemical properties

Physical state : Liquid.

Flash point : Closed cup: >93.33°C (>200°F)

Explosion limits : Lower: 9.9%

Material supports combustion. : Yes.

Color : Not available.

Odor : Not available.

pH : Not available.

Boiling/condensation point : >37.78°C (>100°F)

Melting/freezing point : Not available.

Specific gravity : 1.1

Density (lbs / gal) : 9.18

Vapor pressure : 2.4 kPa (17.8 mm Hg) [20°C]

Vapor density : Not available.

Volatility : 64% (v/v), 57.47% (w/w)

Evaporation rate : 34 (butyl acetate = 1)

Partition coefficient: n-octanol/water : Not available.

% Solid. (w/w) : 42.53

10 . Stability and reactivity

Stability : Stable under recommended storage and handling conditions (see section 7).

Conditions to avoid : No specific data.

Materials to avoid : Reactive or incompatible with the following materials:,acids,oxidizing materials,strong alkalis

Hazardous decomposition products : Under normal conditions of storage and use, hazardous decomposition products should not be produced.

Hazardous polymerization : Under normal conditions of storage and use, hazardous polymerization will not occur.

11 . Toxicological information

Acute toxicity

Product/ingredient name	Result	Species	Dose	Exposure
Titanium dioxide	LD50 Oral	Rat	>10 g/kg	-
diethylene glycol monomethyl ether	LD50 Oral	Rat	4 mL/kg	-
	LD50 Dermal	Rabbit	0.65 g/kg	-

Conclusion/Summary : Not available.

Chronic toxicity

Conclusion/Summary : Not available.

Target organs : Contains material which may cause damage to the following organs: lungs, upper respiratory tract, skin.

Carcinogenicity

Powered by ATRION

11 . Toxicological information

Carcinogenicity : Contains material which may cause cancer, based on animal data. Risk of cancer depends on duration and level of exposure.

Classification

Product/ingredient name	ACGIH	IARC	EPA	NIOSH	NTP	OSHA
Titanium dioxide	A4	2B	-	-	-	-

Teratogenicity : Contains material which may cause birth defects, based on animal data.

Developmental effects : Contains material which may cause developmental abnormalities, based on animal data.

12 . Ecological information

Environmental effects : No known significant effects or critical hazards.

Aquatic ecotoxicity

Product/ingredient name	Result	Species	Exposure
Titanium dioxide	Acute EC50 >1000000 ug/L Fresh water	Daphnia - Water flea - Daphnia magna	48 hours
diethylene glycol monomethyl ether	Acute LC50 7500000 ug/L Fresh water	Fish - Bluegill - Lepomis macrochirus	96 hours

13 . Disposal considerations

Waste disposal : The generation of waste should be avoided or minimized wherever possible. Significant quantities of waste product residues should not be disposed of via the foul sewer but processed in a suitable effluent treatment plant. Dispose of surplus and non-recyclable products via a licensed waste disposal contractor. Disposal of this product, solutions and any by-products should at all times comply with the requirements of environmental protection and waste disposal legislation and any regional local authority requirements. Waste packaging should be recycled. Incineration or landfill should only be considered when recycling is not feasible. This material and its container must be disposed of in a safe way. Care should be taken when handling emptied containers that have not been cleaned or rinsed out. Empty containers or liners may retain some product residues. Avoid dispersal of spilled material and runoff and contact with soil, waterways, drains and sewers.

Disposal should be in accordance with applicable regional, national and local laws and regulations.

Refer to Section 7: HANDLING AND STORAGE and Section 8: EXPOSURE CONTROLS/PERSONAL PROTECTION for additional handling information and protection of employees. Section 6. Accidental release measures

14 . Transport information

Regulation	UN number	Proper shipping name	Classes	PG*	Additional information
UN	None.	Not regulated.	None.	-	-
IMDG	None.	Not regulated.	None.	-	-
DOT	None.	Not regulated.	None.	-	-

PG* : Packing group

Reportable quantity RQ : CERCLA: Hazardous substances.: ammonia: 1000 lbs. (454 kg); diethylene glycol monomethyl ether;

Powered by ATRION

15 . Regulatory information

United States inventory (TSCA 8b) : All components are listed or exempted.
Australia inventory (AICS) : At least one component is not listed.
Canada inventory (DSL) : All components are listed or exempted.
China inventory (IECSC) : All components are listed or exempted.
Europe inventory (REACH) : Please contact your supplier for information on the inventory status of this material.
Japan inventory (ENCS) : At least one component is not listed.
Korea inventory (KECI) : At least one component is not listed.
New Zealand (NZIoC) : Not determined.
Philippines inventory (PICCS) : At least one component is not listed.

United States

U.S. Federal regulations :

United States - TSCA 5(a)2 - Final significant new use rules:
Sodium nitrite Listed

SARA 302/304/311/312 extremely hazardous substances: No products were found.
SARA 302/304 emergency planning and notification: No products were found.
SARA 302/304/311/312 hazardous chemicals: Titanium dioxide; diethylene glycol monomethyl ether
CERCLA: Hazardous substances.: ammonia: 1000 lbs. (454 kg); diethylene glycol monomethyl ether;

SARA 311/312 MSDS Distribution - Chemical Inventory - Hazard Identification:

Chemical name	CAS #	Acute	Chronic	Fire	Reactive	Pressure
Titanium dioxide	13463-67-7	N	Y	N	N	N
diethylene glycol monomethyl ether	111-77-3	Y	Y	Y	N	N
Product as-supplied :		Y	Y	N	N	N

SARA 313	Chemical name	CAS number	Concentration
Supplier notification :	diethylene glycol monomethyl ether	111-77-3	1 - 5

Additional environmental information is contained on the Environmental Data Sheet for this product, which can be obtained from your PPG representative.

Canada

WHMIS (Canada) : Class D-1B: Material causing immediate and serious toxic effects (Toxic). Class D-2A: Material causing other toxic effects (Very toxic). Class D-2B: Material causing other toxic effects (Toxic).

Mexico

Classification

Flammability : 1 **Health** : 3 **Reactivity** : 0

16 . Other information

Hazardous Material Information System (U.S.A.)

Health : 3 * **Flammability** : 1 **Physical hazards** : 0
(*) - Chronic effects

Caution: HMIS® ratings are based on a 0-4 rating scale, with 0 representing minimal hazards or risks, and 4 representing significant hazards or risks Although HMIS® ratings are not required on MSDSs under 29 CFR 1910.1200, the preparer may choose to provide them. HMIS® ratings are to be used with a fully implemented HMIS® program. HMIS® is a registered mark of the National Paint & Coatings Association (NPCA). HMIS® materials may be purchased exclusively from J. J. Keller (800) 327-6868.

The customer is responsible for determining the PPE code for this material.

National Fire Protection Association (U.S.A.)

Health : 3 **Flammability** : 1 **Instability** : 0

Date of previous issue : **2/9/2011.**

Powered by ATRION

16 . Other information

Organization that prepared the MSDS : EHS

◤ **Indicates information that has changed from previously issued version.**

Disclaimer

The information contained in this data sheet is based on present scientific and technical knowledge. The purpose of this information is to draw attention to the health and safety aspects concerning the products supplied by PPG, and to recommend precautionary measures for the storage and handling of the products. No warranty or guarantee is given in respect of the properties of the products. No liability can be accepted for any failure to observe the precautionary measures described in this data sheet or for any misuse of the products.

Powered by ATRION

Material Safety Data Sheet

Date of issue 20 May 2011
Version 25

1 . Product and company identification

Product name : PITT-TECH GLOSS DEEP RUSTIC
Code : 90-377
Supplier : PPG Industries, Inc.
One PPG Place
Pittsburgh, PA 15272
Emergency telephone number : (412) 434-4515 (U.S.)
(514) 645-1320 (Canada)
01-800-00-21-400 (Mexico)
Technical Phone Number : (412) 492-5200 (ALLISON PARK, PA) 8:00 a.m. - 5:00 p.m. EST

2 . Hazards identification

Emergency overview : WARNING!

HARMFUL IF ABSORBED THROUGH SKIN. MAY BE HARMFUL IF INHALED OR SWALLOWED. MAY CAUSE EYE IRRITATION.

Do not get in eyes or on skin or clothing. Use only with adequate ventilation. Keep container tightly closed and sealed until ready for use. Wash thoroughly after handling.

Potential acute health effects

Inhalation : May be harmful if inhaled.
Ingestion : May be harmful if swallowed.
Skin : Toxic in contact with skin.
Eyes : Moderately irritating to eyes.

Over-exposure signs/symptoms

Inhalation : No specific data.
Ingestion : No specific data.
Skin : No specific data.
Eyes : Adverse symptoms may include the following:
irritation
watering
redness

Medical conditions aggravated by over-exposure : None known.

This Material Safety Data Sheet has been prepared in accordance with Canada's Workplace Hazardous Materials Information System (WHMIS) and the OSHA Hazard Communication Standard (29 CFR 1910.1200).

See toxicological information (Section 11)

3 . Composition/information on ingredients

Name	CAS number	%
diethylene glycol monomethyl ether	111-77-3	1 - 5

There are no additional ingredients present which, within the current knowledge of the supplier and in the concentrations applicable, are classified as hazardous to health or the environment and hence require reporting in this section.

Powered by ATRION

4 . First aid measures

If ingestion, irritation, any type of overexposure or symptoms of overexposure occur during or persists after use of this product, contact a POISON CONTROL CENTER, EMERGENCY ROOM OR PHYSICIAN immediately; have Material Safety Data Sheet information available. Never give anything by mouth to an unconscious or convulsing person.

Eye contact : Check for and remove any contact lenses. Immediately flush eyes with running water for at least 15 minutes, keeping eyelids open. Seek immediate medical attention.

Skin contact : Remove contaminated clothing and shoes. Wash skin thoroughly with soap and water or use recognized skin cleanser. Do NOT use solvents or thinners.

Inhalation : Remove to fresh air. Keep person warm and at rest. If not breathing, if breathing is irregular or if respiratory arrest occurs, provide artificial respiration or oxygen by trained personnel.

Ingestion : If swallowed, seek medical advice immediately and show this container or label. Keep person warm and at rest. Do not induce vomiting.

Notes to physician : No specific treatment. Treat symptomatically. Contact poison treatment specialist immediately if large quantities have been ingested or inhaled.

5 . Fire-fighting measures

Flammability of the product : In a fire or if heated, a pressure increase will occur and the container may burst.

Extinguishing media

Suitable : Use an extinguishing agent suitable for the surrounding fire.

Not suitable : None known.

Special exposure hazards : Promptly isolate the scene by removing all persons from the vicinity of the incident if there is a fire. No action shall be taken involving any personal risk or without suitable training.

Hazardous combustion products : Decomposition products may include the following materials:
carbon oxides

Special protective equipment for fire-fighters : Fire-fighters should wear appropriate protective equipment and self-contained breathing apparatus (SCBA) with a full face-piece operated in positive pressure mode.

6 . Accidental release measures

Personal precautions : No action shall be taken involving any personal risk or without suitable training. Evacuate surrounding areas. Keep unnecessary and unprotected personnel from entering. Do not touch or walk through spilled material. Avoid breathing vapor or mist. Provide adequate ventilation. Wear appropriate respirator when ventilation is inadequate. Put on appropriate personal protective equipment (see Section 8).

Environmental precautions : Avoid dispersal of spilled material and runoff and contact with soil, waterways, drains and sewers. Inform the relevant authorities if the product has caused environmental pollution (sewers, waterways, soil or air).

Large spill : Stop leak if without risk. Move containers from spill area. Approach release from upwind. Prevent entry into sewers, water courses, basements or confined areas. Wash spillages into an effluent treatment plant or proceed as follows. Contain and collect spillage with non-combustible, absorbent material e.g. sand, earth, vermiculite or diatomaceous earth and place in container for disposal according to local regulations (see section 13). Dispose of via a licensed waste disposal contractor. Contaminated absorbent material may pose the same hazard as the spilled product. Note: see section 1 for emergency contact information and section 13 for waste disposal.

Small spill : Stop leak if without risk. Move containers from spill area. Dilute with water and mop up if water-soluble or absorb with an inert dry material and place in an appropriate waste disposal container. Dispose of via a licensed waste disposal contractor.

Powered by ATRION

7 . Handling and storage

Handling : Put on appropriate personal protective equipment (see Section 8). Eating, drinking and smoking should be prohibited in areas where this material is handled, stored and processed. Do not swallow. Do not get in eyes or on skin or clothing. Avoid breathing vapor or mist. If during normal use the material presents a respiratory hazard, use only with adequate ventilation or wear appropriate respirator. Keep in the original container or an approved alternative made from a compatible material, kept tightly closed when not in use. Empty containers retain product residue and can be hazardous. Do not reuse container. If this material is part of a multiple component system, read the Material Safety Data Sheet(s) for the other component or components before blending as the resulting mixture may have the hazards of all of its parts.

Storage : Store in accordance with local regulations. Store in original container protected from direct sunlight in a dry, cool and well-ventilated area, away from incompatible materials (see section 10) and food and drink. Keep container tightly closed and sealed until ready for use. Containers that have been opened must be carefully resealed and kept upright to prevent leakage. Do not store in unlabeled containers. Use appropriate containment to avoid environmental contamination. Do not store below the following temperature: 32F / 0C.

8 . Exposure controls/personal protection

Name	Result	ACGIH	OSHA	Ontario	Mexico	PPG
diethylene glycol monomethyl ether	TWA	Not established	Not established	Not established	Not established	30 ppm

Key to abbreviations

A	=	Acceptable Maximum Peak	S	=	Potential skin absorption
ACGIH	=	American Conference of Governmental Industrial Hygienists.	SR	=	Respiratory sensitization
C	=	Ceiling Limit	SS	=	Skin sensitization
F	=	Fume	STEL	=	Short term Exposure limit values
IPEL	=	Internal Permissible Exposure Limit	TD	=	Total dust
OSHA	=	Occupational Safety and Health Administration.	TLV	=	Threshold Limit Value
R	=	Respirable	TWA	=	Time Weighted Average
Z	=	OSHA 29CFR 1910.1200 Subpart Z - Toxic and Hazardous Substances			

Consult local authorities for acceptable exposure limits.

Recommended monitoring procedures : If this product contains ingredients with exposure limits, personal, workplace atmosphere or biological monitoring may be required to determine the effectiveness of the ventilation or other control measures and/or the necessity to use respiratory protective equipment.

Engineering measures : If user operations generate dust, fumes, gas, vapor or mist, use process enclosures, local exhaust ventilation or other engineering controls to keep worker exposure to airborne contaminants below any recommended or statutory limits.

Hygiene measures : Wash hands, forearms and face thoroughly after handling chemical products, before eating, smoking and using the lavatory and at the end of the working period. Appropriate techniques should be used to remove potentially contaminated clothing. Wash contaminated clothing before reusing. Ensure that eyewash stations and safety showers are close to the workstation location.

Personal protection

Eyes : Safety glasses with side shields.

Hands : Chemical-resistant, impervious gloves complying with an approved standard should be worn at all times when handling chemical products if a risk assessment indicates this is necessary.

Respiratory : If workers are exposed to concentrations above the exposure limit, they must use appropriate, certified respirators. Use a properly fitted, air-purifying or air-fed respirator complying with an approved standard if a risk assessment indicates this is necessary. Respirator selection must be based on known or anticipated exposure levels, the hazards of the product and the safe working limits of the selected respirator.

Skin : Personal protective equipment for the body should be selected based on the task being performed and the risks involved and should be approved by a specialist before handling this product.

Powered by ATRION

8 . Exposure controls/personal protection

Environmental exposure controls : Emissions from ventilation or work process equipment should be checked to ensure they comply with the requirements of environmental protection legislation. In some cases, fume scrubbers, filters or engineering modifications to the process equipment will be necessary to reduce emissions to acceptable levels.

9 . Physical and chemical properties

Physical state : Liquid.
Flash point : Closed cup: >93.33°C (>200°F)
Material supports combustion. : Yes.
Color : Not available.
Odor : Not available.
pH : Not available.
Boiling/condensation point : >37.78°C (>100°F)
Melting/freezing point : Not available.
Specific gravity : 1.02
Density (lbs / gal) : 8.51
Vapor pressure : 2.3 kPa (17.3 mm Hg) [20°C]
Vapor density : Not available.
Volatility : 70% (v/v), 67.79% (w/w)
Evaporation rate : 31 (butyl acetate = 1)
Partition coefficient: n-octanol/water : Not available.
% Solid. (w/w) : 32.21

10 . Stability and reactivity

Stability : Stable under recommended storage and handling conditions (see section 7).
Conditions to avoid : No specific data.
Materials to avoid : Reactive or incompatible with the following materials:,oxidizing materials,strong acids,strong alkalis
Hazardous decomposition products : Under normal conditions of storage and use, hazardous decomposition products should not be produced.
Hazardous polymerization : Under normal conditions of storage and use, hazardous polymerization will not occur.

11 . Toxicological information

Acute toxicity

Product/ingredient name	Result	Species	Dose	Exposure
diethylene glycol monomethyl ether	LD50 Oral LD50 Dermal	Rat Rabbit	4 mL/kg 0.65 g/kg	- -

Conclusion/Summary : Not available.

Chronic toxicity

Conclusion/Summary : Not available.
Teratogenicity : Contains material which may cause birth defects, based on animal data.
Developmental effects : Contains material which may cause developmental abnormalities, based on animal data.

Powered by ATRION

12 . Ecological information

Environmental effects : No known significant effects or critical hazards.

Aquatic ecotoxicity

Product/ingredient name	Result	Species	Exposure
diethylene glycol monomethyl ether	Acute LC50 7500000 ug/L Fresh water	Fish - Bluegill - Lepomis macrochirus	96 hours

13 . Disposal considerations

Waste disposal : The generation of waste should be avoided or minimized wherever possible. Significant quantities of waste product residues should not be disposed of via the foul sewer but processed in a suitable effluent treatment plant. Dispose of surplus and non-recyclable products via a licensed waste disposal contractor. Disposal of this product, solutions and any by-products should at all times comply with the requirements of environmental protection and waste disposal legislation and any regional local authority requirements. Waste packaging should be recycled. Incineration or landfill should only be considered when recycling is not feasible. This material and its container must be disposed of in a safe way. Care should be taken when handling emptied containers that have not been cleaned or rinsed out. Empty containers or liners may retain some product residues. Avoid dispersal of spilled material and runoff and contact with soil, waterways, drains and sewers.

Disposal should be in accordance with applicable regional, national and local laws and regulations.

Refer to Section 7: HANDLING AND STORAGE and Section 8: EXPOSURE CONTROLS/PERSONAL PROTECTION for additional handling information and protection of employees. Section 6. Accidental release measures

14 . Transport information

Regulation	UN number	Proper shipping name	Classes	PG*	Additional information
UN	None.	Not regulated.	None.	-	-
IMDG	None.	Not regulated.	None.	-	-
DOT	None.	Not regulated.	None.	-	-

PG* : Packing group

Reportable quantity RQ : CERCLA: Hazardous substances.: 2-(2-butoxyethoxy)ethanol; ammonia, anhydrous: 100 lbs. (45.4 kg); diethylene glycol monomethyl ether;

15 . Regulatory information

United States inventory (TSCA 8b) : All components are listed or exempted.
Australia inventory (AICS) : At least one component is not listed.
Canada inventory (DSL) : All components are listed or exempted.
China inventory (IECSC) : All components are listed or exempted.
Europe inventory (REACH) : Please contact your supplier for information on the inventory status of this material.
Japan inventory (ENCS) : All components are listed or exempted.
Korea inventory (KECI) : At least one component is not listed.
New Zealand (NZIoC) : Not determined.
Philippines inventory (PICCS) : At least one component is not listed.

United States

U.S. Federal regulations :

United States - TSCA 5(a)2 - Final significant new use rules:
Sodium nitrite Listed

SARA 302/304/311/312 extremely hazardous substances: No products were found.
SARA 302/304 emergency planning and notification: No products were found.

Powered by ATRION

15 . Regulatory information

SARA 302/304/311/312 hazardous chemicals: diethylene glycol monomethyl ether
CERCLA: Hazardous substances.: 2-(2-butoxyethoxy)ethanol; ammonia, anhydrous: 100 lbs. (45.4 kg); diethylene glycol monomethyl ether;

SARA 311/312 MSDS Distribution - Chemical Inventory - Hazard Identification:

Chemical name	CAS #	Acute	Chronic	Fire	Reactive	Pressure
diethylene glycol monomethyl ether	**111-77-3**	Y	Y	Y	N	N
Product as-supplied :		Y	Y	N	N	N

SARA 313	Chemical name	CAS number	Concentration
Supplier notification :	diethylene glycol monomethyl ether	111-77-3	1 - 5

Additional environmental information is contained on the Environmental Data Sheet for this product, which can be obtained from your PPG representative.

Canada

WHMIS (Canada) : Class D-1B: Material causing immediate and serious toxic effects (Toxic). Class D-2A: Material causing other toxic effects (Very toxic). Class D-2B: Material causing other toxic effects (Toxic).

Mexico

Classification

Flammability : 1 **Health** : 3 **Reactivity** : 0

16 . Other information

Hazardous Material Information System (U.S.A.)

Health : 3 * **Flammability** : 1 **Physical hazards** : 0
(*) - Chronic effects

Caution: HMIS® ratings are based on a 0-4 rating scale, with 0 representing minimal hazards or risks, and 4 representing significant hazards or risks Although HMIS® ratings are not required on MSDSs under 29 CFR 1910.1200, the preparer may choose to provide them. HMIS® ratings are to be used with a fully implemented HMIS® program. HMIS® is a registered mark of the National Paint & Coatings Association (NPCA). HMIS® materials may be purchased exclusively from J. J. Keller (800) 327-6868.

The customer is responsible for determining the PPE code for this material.

National Fire Protection Association (U.S.A.)

Health : 3 **Flammability** : 1 **Instability** : 0

Date of previous issue : **2/4/2011.**

Organization that prepared the MSDS : EHS

Indicates information that has changed from previously issued version.

Disclaimer

The information contained in this data sheet is based on present scientific and technical knowledge. The purpose of this information is to draw attention to the health and safety aspects concerning the products supplied by PPG, and to recommend precautionary measures for the storage and handling of the products. No warranty or guarantee is given in respect of the properties of the products. No liability can be accepted for any failure to observe the precautionary measures described in this data sheet or for any misuse of the products.

Powered by ATRION

Material Safety Data Sheet

Date of issue 4 February 2011
Version 16.01

1 . Product and company identification

Product name : PORCELAIN WHITE 2.8 VOC PITTHANE

Code : 95-812

Supplier : PPG Industries, Inc.
One PPG Place
Pittsburgh, PA 15272

Emergency telephone number : (412) 434-4515 (U.S.)
(514) 645-1320 (Canada)
01-800-00-21-400 (Mexico)

Technical Phone Number : (412) 492-5200 (ALLISON PARK, PA) 8:00 a.m. - 5:00 p.m. EST

2 . Hazards identification

Emergency overview : WARNING!

FLAMMABLE LIQUID AND VAPOR. CAUSES RESPIRATORY TRACT IRRITATION. MAY BE HARMFUL IF INHALED OR SWALLOWED. SANDING AND GRINDING DUSTS MAY BE HARMFUL IF INHALED. MAY CAUSE EYE IRRITATION. PROLONGED OR REPEATED CONTACT MAY DRY SKIN AND CAUSE IRRITATION. CONTAINS MATERIAL THAT CAN CAUSE TARGET ORGAN DAMAGE.

Keep away from flames, such as a pilot light, and any object that sparks, such as an electric motor. Keep away from heat. Do not smoke. Do not swallow. Avoid breathing vapor or mist. Avoid contact with eyes, skin and clothing. Use only with adequate ventilation. Keep container tightly closed and sealed until ready for use. Wash thoroughly after handling.

Potential acute health effects

Inhalation : May be harmful if inhaled. Irritating to respiratory system. Can irritate eyes, nose, mouth and throat.

Ingestion : May be harmful if swallowed.

Skin : May cause skin dryness and irritation.

Eyes : Moderately irritating to eyes.

Over-exposure signs/symptoms

Repeated exposure to high vapor concentrations may cause irritation of the respiratory system and permanent brain and nervous system damage. Inhalation of vapor/aerosol concentrations above the recommended exposure limits causes headaches, drowsiness and nausea and may lead to unconsciousness or death. There is some evidence that repeated exposure to organic solvent vapors in combination with constant loud noise can cause greater hearing loss than expected from exposure to noise alone.

Medical conditions aggravated by over-exposure : Pre-existing disorders involving any target organs mentioned in this MSDS as being at risk may be aggravated by over-exposure to this product.

This Material Safety Data Sheet has been prepared in accordance with Canada's Workplace Hazardous Materials Information System (WHMIS) and the OSHA Hazard Communication Standard (29 CFR 1910.1200).

See toxicological information (Section 11)

Powered by ATRION

3 . Composition/information on ingredients

Name	CAS number	%
Titanium dioxide	13463-67-7	15 - 40
heptan-2-one	110-43-0	10 - 30
Silicon dioxide	7631-86-9	1 - 5
aluminium hydroxide	21645-51-2	1 - 5
Barium sulfate	7727-43-7	1 - 5
Methyl methacrylate	80-62-6	0.1 - 1
2-(2H-benzotriazol-2-yl)-4,6-ditertpentylphenol	25973-55-1	0.1 - 1
xylene	1330-20-7	0.1 - 1
n-Butyl acrylate	141-32-2	0.1 - 1

There are no additional ingredients present which, within the current knowledge of the supplier and in the concentrations applicable, are classified as hazardous to health or the environment and hence require reporting in this section.

4 . First aid measures

If ingestion, irritation, any type of overexposure or symptoms of overexposure occur during or persists after use of this product, contact a POISON CONTROL CENTER, EMERGENCY ROOM OR PHYSICIAN immediately; have Material Safety Data Sheet information available. Never give anything by mouth to an unconscious or convulsing person.

Eye contact : Check for and remove any contact lenses. Immediately flush eyes with running water for at least 15 minutes, keeping eyelids open. Seek immediate medical attention.

Skin contact : Remove contaminated clothing and shoes. Wash skin thoroughly with soap and water or use recognized skin cleanser. Do NOT use solvents or thinners.

Inhalation : Remove to fresh air. Keep person warm and at rest. If not breathing, if breathing is irregular or if respiratory arrest occurs, provide artificial respiration or oxygen by trained personnel.

Ingestion : If swallowed, seek medical advice immediately and show this container or label. Keep person warm and at rest. Do not induce vomiting.

Notes to physician : No specific treatment. Treat symptomatically. Contact poison treatment specialist immediately if large quantities have been ingested or inhaled.

5 . Fire-fighting measures

Flammability of the product : Flammable liquid. In a fire or if heated, a pressure increase will occur and the container may burst, with the risk of a subsequent explosion. Vapors may accumulate in low or confined areas or travel a considerable distance to a source of ignition and flash back. Runoff to sewer may create fire or explosion hazard.

Extinguishing media

Suitable : Use dry chemical, CO_2, water spray (fog) or foam.

Not suitable : Do not use water jet.

Special exposure hazards : Promptly isolate the scene by removing all persons from the vicinity of the incident if there is a fire. No action shall be taken involving any personal risk or without suitable training. Move containers from fire area if this can be done without risk. Use water spray to keep fire-exposed containers cool.

Hazardous combustion products : Decomposition products may include the following materials:
carbon oxides
sulfur oxides
metal oxide/oxides

Special protective equipment for fire-fighters : Fire-fighters should wear appropriate protective equipment and self-contained breathing apparatus (SCBA) with a full face-piece operated in positive pressure mode.

Powered by ATRION

6 . Accidental release measures

Personal precautions : No action shall be taken involving any personal risk or without suitable training. Evacuate surrounding areas. Keep unnecessary and unprotected personnel from entering. Do not touch or walk through spilled material. Shut off all ignition sources. No flares, smoking or flames in hazard area. Avoid breathing vapor or mist. Provide adequate ventilation. Wear appropriate respirator when ventilation is inadequate. Put on appropriate personal protective equipment (see Section 8).

Environmental precautions : Avoid dispersal of spilled material and runoff and contact with soil, waterways, drains and sewers. Inform the relevant authorities if the product has caused environmental pollution (sewers, waterways, soil or air).

Large spill : Stop leak if without risk. Move containers from spill area. Approach release from upwind. Use spark-proof tools and explosion-proof equipment. Prevent entry into sewers, water courses, basements or confined areas. Wash spillages into an effluent treatment plant or proceed as follows. Contain and collect spillage with non-combustible, absorbent material e.g. sand, earth, vermiculite or diatomaceous earth and place in container for disposal according to local regulations (see section 13). Dispose of via a licensed waste disposal contractor. Contaminated absorbent material may pose the same hazard as the spilled product. Note: see section 1 for emergency contact information and section 13 for waste disposal.

Small spill : Stop leak if without risk. Move containers from spill area. Use spark-proof tools and explosion-proof equipment. Dilute with water and mop up if water-soluble or absorb with an inert dry material and place in an appropriate waste disposal container. Dispose of via a licensed waste disposal contractor.

7 . Handling and storage

Handling : Put on appropriate personal protective equipment (see Section 8). Eating, drinking and smoking should be prohibited in areas where this material is handled, stored and processed. Do not swallow. Do not get in eyes or on skin or clothing. Avoid breathing vapor or mist. Use only with adequate ventilation. Wear appropriate respirator when ventilation is inadequate. Do not enter storage areas and confined spaces unless adequately ventilated. Keep in the original container or an approved alternative made from a compatible material, kept tightly closed when not in use. Store and use away from heat, sparks, open flame or any other ignition source. Use explosion-proof electrical (ventilating, lighting and material handling) equipment. Use non-sparking tools. Take precautionary measures against electrostatic discharges. Vapors are heavier than air and may spread along floors. To avoid fire or explosion, dissipate static electricity during transfer by grounding and bonding containers and equipment before transferring material. Empty containers retain product residue and can be hazardous. Do not reuse container. If this material is part of a multiple component system, read the Material Safety Data Sheet(s) for the other component or components before blending as the resulting mixture may have the hazards of all of its parts.

Storage : Store in accordance with local regulations. Store in a segregated and approved area. Store in original container protected from direct sunlight in a dry, cool and well-ventilated area, away from incompatible materials (see section 10) and food and drink. Eliminate all ignition sources. Separate from oxidizing materials. Keep container tightly closed and sealed until ready for use. Containers that have been opened must be carefully resealed and kept upright to prevent leakage. Do not store in unlabeled containers. Use appropriate containment to avoid environmental contamination. Do not store above the following temperature: 120F / 49C.

8 . Exposure controls/personal protection

Name	Result	ACGIH	OSHA	Ontario	Mexico	PPG

Powered by ATRION

8 . Exposure controls/personal protection

Titanium dioxide	TWA	10 mg/m³	15 mg/m³ TD	10 mg/m³ TD	10 mg/m³ (as Ti)	Not established
	STEL	Not established	Not established	Not established	20 mg/m³ (as Ti)	Not established
heptan-2-one	TWA	50 ppm	100 ppm	25 ppm	50 ppm	Not established
	STEL	Not established	Not established	Not established	100 ppm	Not established
Silicon dioxide	TWA	Not established	Not established	Not established	10 mg/m³ 3 mg/m³ R	Not established
aluminium hydroxide	TWA	1 mg/m³	Not established	Not established	2 mg/m³	Not established
Barium sulfate	TWA	10 mg/m³	5 mg/m³ R 15 mg/m³ TD	10 mg/m³ TD	Not established	Not established
Methyl methacrylate	TWA	50 ppm SS	100 ppm	50 ppm SS	100 ppm	Not established
	STEL	100 ppm SS	Not established	100 ppm SS	125 ppm	Not established
xylene	TWA	100 ppm	100 ppm	100 ppm	100 ppm	Not established
	STEL	150 ppm	Not established	150 ppm	150 ppm	Not established
n-Butyl acrylate	TWA	2 ppm SS	Not established	2 ppm SS	10 ppm	Not established

Key to abbreviations

A	=	Acceptable Maximum Peak	S	=	Potential skin absorption
ACGIH	=	American Conference of Governmental Industrial Hygienists.	SR	=	Respiratory sensitization
C	=	Ceiling Limit	SS	=	Skin sensitization
F	=	Fume	STEL	=	Short term Exposure limit values
IPEL	=	Internal Permissible Exposure Limit	TD	=	Total dust
OSHA	=	Occupational Safety and Health Administration.	TLV	=	Threshold Limit Value
R	=	Respirable	TWA	=	Time Weighted Average
Z	=	OSHA 29CFR 1910.1200 Subpart Z - Toxic and Hazardous Substances			

Consult local authorities for acceptable exposure limits.

Recommended monitoring procedures : If this product contains ingredients with exposure limits, personal, workplace atmosphere or biological monitoring may be required to determine the effectiveness of the ventilation or other control measures and/or the necessity to use respiratory protective equipment.

Engineering measures : Use only with adequate ventilation. Use process enclosures, local exhaust ventilation or other engineering controls to keep worker exposure to airborne contaminants below any recommended or statutory limits. The engineering controls also need to keep gas, vapor or dust concentrations below any lower explosive limits. Use explosion-proof ventilation equipment.

Hygiene measures : Wash hands, forearms and face thoroughly after handling chemical products, before eating, smoking and using the lavatory and at the end of the working period. Appropriate techniques should be used to remove potentially contaminated clothing. Wash contaminated clothing before reusing. Ensure that eyewash stations and safety showers are close to the workstation location.

Personal protection

Eyes : Safety glasses with side shields.

Powered by ATRION

8 . Exposure controls/personal protection

Hands : Chemical-resistant, impervious gloves complying with an approved standard should be worn at all times when handling chemical products if a risk assessment indicates this is necessary.

Respiratory : If workers are exposed to concentrations above the exposure limit, they must use appropriate, certified respirators. Use a properly fitted, air-purifying or air-fed respirator complying with an approved standard if a risk assessment indicates this is necessary. Respirator selection must be based on known or anticipated exposure levels, the hazards of the product and the safe working limits of the selected respirator.

Skin : Personal protective equipment for the body should be selected based on the task being performed and the risks involved and should be approved by a specialist before handling this product.

Environmental exposure controls : Emissions from ventilation or work process equipment should be checked to ensure they comply with the requirements of environmental protection legislation. In some cases, fume scrubbers, filters or engineering modifications to the process equipment will be necessary to reduce emissions to acceptable levels.

9 . Physical and chemical properties

Physical state : Liquid.
Flash point : Closed cup: 28.89°C (84°F)
Explosion limits : Lower: 1.2%
Color : Not available.
Odor : Not available.
pH : Not available.
Boiling/condensation point : >37.78°C (>100°F)
Melting/freezing point : Not available.
Specific gravity : 1.47
Density (lbs / gal) : 12.27
Vapor pressure : 0.32 kPa (2.4 mm Hg) [20°C]
Vapor density : Not available.
Volatility : 36% (v/v), 19.75% (w/w)
Odor threshold : Not available.
Evaporation rate : 41 (butyl acetate = 1)
Partition coefficient: n-octanol/water : Not available.
% Solid. (w/w) : 80.25

10 . Stability and reactivity

Stability : Stable under recommended storage and handling conditions (see section 7).

Conditions to avoid : Avoid all possible sources of ignition (spark or flame). Do not pressurize, cut, weld, braze, solder, drill, grind or expose containers to heat or sources of ignition.

Materials to avoid : Reactive or incompatible with the following materials:,water,acids,oxidizing materials,strong alkalis

Hazardous decomposition products : Under normal conditions of storage and use, hazardous decomposition products should not be produced.

Hazardous polymerization : Under normal conditions of storage and use, hazardous polymerization will not occur.

Powered by ATRION

11 . Toxicological information

Acute toxicity

Product/ingredient name	Result	Species	Dose	Exposure
Titanium dioxide	LD50 Oral	Rat	>10 g/kg	-
heptan-2-one	LD50 Oral	Rat	1.6 g/kg	-
	LD50 Dermal	Rabbit	10.206 g/kg	-
Methyl methacrylate	LD50 Oral	Rat	7872 mg/kg	-
	LD50 Dermal	Rabbit	>5 g/kg	-
	LC50 Inhalation Vapor	Rat	78000 mg/m3	4 hours
2-(2H-benzotriazol-2-yl)-4,6-ditertpentylphenol	LD50 Oral	Rat	>2325 mg/kg	-
xylene	LD50 Oral	Rat	4.3 g/kg	-
	LD50 Dermal	Rabbit	>1.7 g/kg	-
	LC50 Inhalation Vapor	Rat	5000 ppm	4 hours
n-Butyl acrylate	LD50 Oral	Rat	900 mg/kg	-
	LD50 Dermal	Rabbit	2 mL/kg	-
	LC50 Inhalation Vapor	Rat	1970 ppm	4 hours

Chronic toxicity

Conclusion/Summary : Not available.

Defatting irritant? : Prolonged or repeated contact can defat the skin and lead to irritation, cracking and/or dermatitis.

Target organs : Contains material which causes damage to the following organs: lungs, brain, upper respiratory tract, central nervous system (CNS).
Contains material which may cause damage to the following organs: peripheral nervous system, skin, eyes, nose/sinuses, throat.

Carcinogenicity

Carcinogenicity : Contains material which may cause cancer, based on animal data. Risk of cancer depends on duration and level of exposure.

Classification

Product/ingredient name	ACGIH	IARC	EPA	NIOSH	NTP	OSHA
Titanium dioxide	A4	2B	-	-	-	-
Silicon dioxide	-	3	-	-	-	-
aluminium hydroxide	A4	-	-	-	-	-
Methyl methacrylate	A4	3	-	-	-	-
n-Butyl acrylate	A4	3	-	-	-	-

Mutagenicity

Mutagenicity : No known significant effects or critical hazards.

Teratogenicity

Teratogenicity : Contains material which may cause birth defects, based on animal data.

Reproductive toxicity

Developmental effects : No known significant effects or critical hazards.

Fertility effects : Contains material which may impair male fertility, based on animal data. Contains material which may impair female fertility, based on animal data.

12 . Ecological information

Environmental effects : No known significant effects or critical hazards.

Aquatic ecotoxicity

Product/ingredient name	Result	Species	Exposure

Powered by ATRION

12 . Ecological information

Titanium dioxide	Acute EC50 >1000000 ug/L Fresh water	Daphnia - Water flea - Daphnia magna	48 hours
heptan-2-one	Acute LC50 131000 to 137000 ug/L Fresh water	Fish - Fathead minnow - Pimephales promelas	96 hours
Barium sulfate	Acute EC50 32000 ug/L Fresh water	Daphnia - Water flea - Daphnia magna	48 hours
Methyl methacrylate	Acute LC50 130000 ug/L Fresh water	Fish - Fathead minnow - Pimephales promelas	96 hours
xylene	Acute LC50 3300 to 4093 ug/L Fresh water	Fish - Rainbow trout,donaldson trout - Oncorhynchus mykiss	96 hours

Other adverse effects : No known significant effects or critical hazards.

13 . Disposal considerations

Waste disposal : The generation of waste should be avoided or minimized wherever possible. Significant quantities of waste product residues should not be disposed of via the foul sewer but processed in a suitable effluent treatment plant. Dispose of surplus and non-recyclable products via a licensed waste disposal contractor. Disposal of this product, solutions and any by-products should at all times comply with the requirements of environmental protection and waste disposal legislation and any regional local authority requirements. Waste packaging should be recycled. Incineration or landfill should only be considered when recycling is not feasible. This material and its container must be disposed of in a safe way. Care should be taken when handling emptied containers that have not been cleaned or rinsed out. Empty containers or liners may retain some product residues. Vapor from product residues may create a highly flammable or explosive atmosphere inside the container. Do not cut, weld or grind used containers unless they have been cleaned thoroughly internally. Avoid dispersal of spilled material and runoff and contact with soil, waterways, drains and sewers.

Disposal should be in accordance with applicable regional, national and local laws and regulations.

Refer to Section 7: HANDLING AND STORAGE and Section 8: EXPOSURE CONTROLS/PERSONAL PROTECTION for additional handling information and protection of employees. Section 6. Accidental release measures

14 . Transport information

Regulation	UN number	Proper shipping name	Classes	PG*	Additional information
UN	1263	PAINT	3	III	-
IMDG	1263	PAINT	3	III	-
DOT	1263	PAINT (heptan-2-one)	3	III	-

PG* : Packing group

Reportable quantity RQ : CERCLA: Hazardous substances.: xylene: 100 lbs. (45.4 kg); Methyl methacrylate: 1000 lbs. (454 kg);

15 . Regulatory information

United States inventory (TSCA 8b) : All components are listed or exempted.
Australia inventory (AICS) : All components are listed or exempted.
Canada inventory (DSL) : All components are listed or exempted.
China inventory (IECSC) : All components are listed or exempted.

Europe inventory (REACH) : Please contact your supplier for information on the inventory status of this material.
Japan inventory (ENCS) : At least one component is not listed.

Powered by ATRION

15 . Regulatory information

Korea inventory (KECI) : All components are listed or exempted.

New Zealand (NZIoC) : Not determined.

Philippines inventory (PICCS) : All components are listed or exempted.

United States

U.S. Federal regulations :

United States - TSCA 5(a)2 - Proposed significant new use rules:
n-Butyl acrylate Listed

SARA 302/304/311/312 extremely hazardous substances: No products were found.
SARA 302/304 emergency planning and notification: No products were found.
SARA 302/304/311/312 hazardous chemicals: Barium sulfate; heptan-2-one; Titanium dioxide; aluminium hydroxide
CERCLA: Hazardous substances.: xylene: 100 lbs. (45.4 kg); Methyl methacrylate: 1000 lbs. (454 kg);

SARA 311/312 MSDS Distribution - Chemical Inventory - Hazard Identification:

Chemical name	CAS #	Acute	Chronic	Fire	Reactive	Pressure
Titanium dioxide	13463-67-7	N	Y	N	N	N
heptan-2-one	110-43-0	Y	N	Y	N	N
Silicon dioxide	7631-86-9	N	N	N	N	N
aluminium hydroxide	21645-51-2	N	N	N	N	N
Barium sulfate	7727-43-7	N	N	N	N	N
Methyl methacrylate	80-62-6	Y	Y	Y	Y	N
2-(2H-benzotriazol-2-yl)-4,6-ditertpentylphenol	25973-55-1	N	Y	N	N	N
n-Butyl acrylate	141-32-2	Y	Y	Y	Y	N
	Product as-supplied :	Y	Y	Y	N	N

Additional environmental information is contained on the Environmental Data Sheet for this product, which can be obtained from your PPG representative.

Canada

WHMIS (Canada) : Class B-2: Flammable liquid with a flash point lower than 37.8°C (100°F). Class D-2A: Material causing other toxic effects (Very toxic). Class D-2B: Material causing other toxic effects (Toxic).

Mexico

Classification

Flammability : 3 **Health** : 2 **Reactivity** : 0

16 . Other information

Hazardous Material Information System (U.S.A.)

Health : 2 * **Flammability** : 3 **Physical hazards** : 0
(*) - Chronic effects

Caution: HMIS® ratings are based on a 0-4 rating scale, with 0 representing minimal hazards or risks, and 4 representing significant hazards or risks Although HMIS® ratings are not required on MSDSs under 29 CFR 1910.1200, the preparer may choose to provide them. HMIS® ratings are to be used with a fully implemented HMIS® program. HMIS® is a registered mark of the National Paint & Coatings Association (NPCA). HMIS® materials may be purchased exclusively from J. J. Keller (800) 327-6868.

The customer is responsible for determining the PPE code for this material.

National Fire Protection Association (U.S.A.)

Health : 2 **Flammability** : 3 **Instability** : 0

Date of previous issue : **11/20/2010.**

Organization that prepared the MSDS : EHS

Indicates information that has changed from previously issued version.

Disclaimer

Powered by ATRION

16 . Other information

The information contained in this data sheet is based on present scientific and technical knowledge. The purpose of this information is to draw attention to the health and safety aspects concerning the products supplied by PPG, and to recommend precautionary measures for the storage and handling of the products. No warranty or guarantee is given in respect of the properties of the products. No liability can be accepted for any failure to observe the precautionary measures described in this data sheet or for any misuse of the products.

Powered by ATRION

Material Safety Data Sheet

Date of issue 2 June 2011
Version 14

1 . Product and company identification

Product name : ULTRA 2.08 BLACK READY MIX COMP A

Code : 95-814

Supplier : PPG Industries, Inc.
One PPG Place
Pittsburgh, PA 15272

Emergency telephone number : (412) 434-4515 (U.S.)
(514) 645-1320 (Canada)
01-800-00-21-400 (Mexico)

Technical Phone Number : (412) 492-5200 (ALLISON PARK, PA) 8:00 a.m. - 5:00 p.m. EST

2 . Hazards identification

Emergency overview : DANGER!

FLAMMABLE LIQUID AND VAPOR. CAUSES RESPIRATORY TRACT IRRITATION. MAY BE HARMFUL IF INHALED OR SWALLOWED. SANDING AND GRINDING DUSTS MAY BE HARMFUL IF INHALED. ASPIRATION HAZARD. CAN ENTER LUNGS AND CAUSE DAMAGE. MAY CAUSE EYE IRRITATION. PROLONGED OR REPEATED CONTACT MAY DRY SKIN AND CAUSE IRRITATION. CONTAINS MATERIAL THAT CAN CAUSE TARGET ORGAN DAMAGE.

Keep away from flames, such as a pilot light, and any object that sparks, such as an electric motor. Keep away from heat. Do not smoke. Do not swallow. Avoid breathing vapor or mist. Avoid contact with eyes, skin and clothing. Use only with adequate ventilation. Keep container tightly closed and sealed until ready for use. Wash thoroughly after handling.

Potential acute health effects

Inhalation : May be harmful if inhaled. Irritating to respiratory system. Can irritate eyes, nose, mouth and throat.

Ingestion : May be harmful if swallowed. Aspiration hazard if swallowed. Can enter lungs and cause damage.

Skin : May cause skin dryness and irritation.

Eyes : Moderately irritating to eyes.

Over-exposure signs/symptoms

Repeated exposure to high vapor concentrations may cause irritation of the respiratory system and permanent brain and nervous system damage. Inhalation of vapor/aerosol concentrations above the recommended exposure limits causes headaches, drowsiness and nausea and may lead to unconsciousness or death. There is some evidence that repeated exposure to organic solvent vapors in combination with constant loud noise can cause greater hearing loss than expected from exposure to noise alone.

Medical conditions aggravated by over-exposure : Pre-existing disorders involving any target organs mentioned in this MSDS as being at risk may be aggravated by over-exposure to this product.

This Material Safety Data Sheet has been prepared in accordance with Canada's Workplace Hazardous Materials Information System (WHMIS) and the OSHA Hazard Communication Standard (29 CFR 1910.1200).

See toxicological information (Section 11)

Powered by ATRION

3 . Composition/information on ingredients

Name	CAS number	%
PARACHLOROBENZOTRIFLUORIDE	98-56-6	10 - 30
heptan-2-one	110-43-0	10 - 30
barium sulfate	7727-43-7	5 - 10
Carbon black	1333-86-4	1 - 5
Naphtha (petroleum), heavy alkylate	64741-65-7	0.5 - 1.5
methyl methacrylate	80-62-6	0.1 - 1
xylene	1330-20-7	0.1 - 1
2-(2H-benzotriazol-2-yl)-4,6-ditertpentylphenol	25973-55-1	0.1 - 1
n-butyl acrylate	141-32-2	0.1 - 1

There are no additional ingredients present which, within the current knowledge of the supplier and in the concentrations applicable, are classified as hazardous to health or the environment and hence require reporting in this section.

4 . First aid measures

If ingestion, irritation, any type of overexposure or symptoms of overexposure occur during or persists after use of this product, contact a POISON CONTROL CENTER, EMERGENCY ROOM OR PHYSICIAN immediately; have Material Safety Data Sheet information available. Never give anything by mouth to an unconscious or convulsing person.

Eye contact : Check for and remove any contact lenses. Immediately flush eyes with running water for at least 15 minutes, keeping eyelids open. Seek immediate medical attention.

Skin contact : Remove contaminated clothing and shoes. Wash skin thoroughly with soap and water or use recognized skin cleanser. Do NOT use solvents or thinners.

Inhalation : Remove to fresh air. Keep person warm and at rest. If not breathing, if breathing is irregular or if respiratory arrest occurs, provide artificial respiration or oxygen by trained personnel.

Ingestion : If swallowed, seek medical advice immediately and show this container or label. Keep person warm and at rest. Do not induce vomiting.

Notes to physician : No specific treatment. Treat symptomatically. Contact poison treatment specialist immediately if large quantities have been ingested or inhaled.

5 . Fire-fighting measures

Flammability of the product : Flammable liquid. In a fire or if heated, a pressure increase will occur and the container may burst, with the risk of a subsequent explosion. Vapors may accumulate in low or confined areas or travel a considerable distance to a source of ignition and flash back. Runoff to sewer may create fire or explosion hazard.

Extinguishing media

Suitable : Use dry chemical, CO_2, water spray (fog) or foam.

Not suitable : Do not use water jet.

Special exposure hazards : Promptly isolate the scene by removing all persons from the vicinity of the incident if there is a fire. No action shall be taken involving any personal risk or without suitable training. Move containers from fire area if this can be done without risk. Use water spray to keep fire-exposed containers cool.

Hazardous combustion products : Decomposition products may include the following materials:
carbon oxides
sulfur oxides
metal oxide/oxides

Special protective equipment for fire-fighters : Fire-fighters should wear appropriate protective equipment and self-contained breathing apparatus (SCBA) with a full face-piece operated in positive pressure mode.

Powered by ATRION

6 . Accidental release measures

Personal precautions : No action shall be taken involving any personal risk or without suitable training. Evacuate surrounding areas. Keep unnecessary and unprotected personnel from entering. Do not touch or walk through spilled material. Shut off all ignition sources. No flares, smoking or flames in hazard area. Avoid breathing vapor or mist. Provide adequate ventilation. Wear appropriate respirator when ventilation is inadequate. Put on appropriate personal protective equipment (see Section 8).

Environmental precautions : Avoid dispersal of spilled material and runoff and contact with soil, waterways, drains and sewers. Inform the relevant authorities if the product has caused environmental pollution (sewers, waterways, soil or air).

Large spill : Stop leak if without risk. Move containers from spill area. Approach release from upwind. Use spark-proof tools and explosion-proof equipment. Prevent entry into sewers, water courses, basements or confined areas. Wash spillages into an effluent treatment plant or proceed as follows. Contain and collect spillage with non-combustible, absorbent material e.g. sand, earth, vermiculite or diatomaceous earth and place in container for disposal according to local regulations (see section 13). Dispose of via a licensed waste disposal contractor. Contaminated absorbent material may pose the same hazard as the spilled product. Note: see section 1 for emergency contact information and section 13 for waste disposal.

Small spill : Stop leak if without risk. Move containers from spill area. Use spark-proof tools and explosion-proof equipment. Dilute with water and mop up if water-soluble or absorb with an inert dry material and place in an appropriate waste disposal container. Dispose of via a licensed waste disposal contractor.

7 . Handling and storage

Handling : Put on appropriate personal protective equipment (see Section 8). Eating, drinking and smoking should be prohibited in areas where this material is handled, stored and processed. Do not swallow. Do not get in eyes or on skin or clothing. Avoid breathing vapor or mist. Use only with adequate ventilation. Wear appropriate respirator when ventilation is inadequate. Do not enter storage areas and confined spaces unless adequately ventilated. Keep in the original container or an approved alternative made from a compatible material, kept tightly closed when not in use. Store and use away from heat, sparks, open flame or any other ignition source. Use explosion-proof electrical (ventilating, lighting and material handling) equipment. Use non-sparking tools. Take precautionary measures against electrostatic discharges. Vapors are heavier than air and may spread along floors. To avoid fire or explosion, dissipate static electricity during transfer by grounding and bonding containers and equipment before transferring material. Empty containers retain product residue and can be hazardous. Do not reuse container. If this material is part of a multiple component system, read the Material Safety Data Sheet(s) for the other component or components before blending as the resulting mixture may have the hazards of all of its parts.

Storage : Store in accordance with local regulations. Store in a segregated and approved area. Store in original container protected from direct sunlight in a dry, cool and well-ventilated area, away from incompatible materials (see section 10) and food and drink. Eliminate all ignition sources. Separate from oxidizing materials. Keep container tightly closed and sealed until ready for use. Containers that have been opened must be carefully resealed and kept upright to prevent leakage. Do not store in unlabeled containers. Use appropriate containment to avoid environmental contamination. Do not store above the following temperature: 120F / 49C.

8 . Exposure controls/personal protection

Name	Result	ACGIH	OSHA	Ontario	Mexico	PPG
PARACHLOROBENZOTRIFLUORIDE	TWA	Not established	Not established	Not established	Not established	25 ppm
heptan-2-one	TWA	50 ppm	100 ppm	25 ppm	50 ppm	Not established
	STEL	Not established	Not established	Not established	100 ppm	Not established

Powered by ATRION

8 . Exposure controls/personal protection

barium sulfate	TWA	10 mg/m³	5 mg/m³ R 15 mg/m³ TD	10 mg/m³ TD	Not established	Not established
Carbon black	TWA	3.5 mg/m³	3.5 mg/m³	3.5 mg/m³	3.5 mg/m³	Not established
	STEL	Not established	Not established	Not established	7 mg/m³	Not established
methyl methacrylate	TWA	50 ppm SS	100 ppm	50 ppm SS	100 ppm	Not established
	STEL	100 ppm SS	Not established	100 ppm SS	125 ppm	Not established
xylene	TWA	100 ppm	100 ppm	100 ppm	100 ppm	Not established
	STEL	150 ppm	Not established	150 ppm	150 ppm	Not established
n-butyl acrylate	TWA	2 ppm SS	Not established	2 ppm SS	10 ppm	Not established

Key to abbreviations

A = Acceptable Maximum Peak
ACGIH = American Conference of Governmental Industrial Hygienists.
C = Ceiling Limit
F = Fume
IPEL = Internal Permissible Exposure Limit
OSHA = Occupational Safety and Health Administration.
R = Respirable
Z = OSHA 29CFR 1910.1200 Subpart Z - Toxic and Hazardous Substances
S = Potential skin absorption
SR = Respiratory sensitization
SS = Skin sensitization
STEL = Short term Exposure limit values
TD = Total dust
TLV = Threshold Limit Value
TWA = Time Weighted Average

Consult local authorities for acceptable exposure limits.

Recommended monitoring procedures : If this product contains ingredients with exposure limits, personal, workplace atmosphere or biological monitoring may be required to determine the effectiveness of the ventilation or other control measures and/or the necessity to use respiratory protective equipment.

Engineering measures : Use only with adequate ventilation. Use process enclosures, local exhaust ventilation or other engineering controls to keep worker exposure to airborne contaminants below any recommended or statutory limits. The engineering controls also need to keep gas, vapor or dust concentrations below any lower explosive limits. Use explosion-proof ventilation equipment.

Hygiene measures : Wash hands, forearms and face thoroughly after handling chemical products, before eating, smoking and using the lavatory and at the end of the working period. Appropriate techniques should be used to remove potentially contaminated clothing. Wash contaminated clothing before reusing. Ensure that eyewash stations and safety showers are close to the workstation location.

Personal protection

Eyes : Safety glasses with side shields.

Hands : Chemical-resistant, impervious gloves complying with an approved standard should be worn at all times when handling chemical products if a risk assessment indicates this is necessary.

Respiratory : If workers are exposed to concentrations above the exposure limit, they must use appropriate, certified respirators. Use a properly fitted, air-purifying or air-fed respirator complying with an approved standard if a risk assessment indicates this is necessary. Respirator selection must be based on known or anticipated exposure levels, the hazards of the product and the safe working limits of the selected respirator.

Skin : Personal protective equipment for the body should be selected based on the task being performed and the risks involved and should be approved by a specialist before handling this product.

Powered by ATRION

8 . Exposure controls/personal protection

Environmental exposure controls : Emissions from ventilation or work process equipment should be checked to ensure they comply with the requirements of environmental protection legislation. In some cases, fume scrubbers, filters or engineering modifications to the process equipment will be necessary to reduce emissions to acceptable levels.

9 . Physical and chemical properties

Physical state : Liquid.
Flash point : Closed cup: 15°C (59°F)
Explosion limits : Lower: 1%
Color : Not available.
Odor : Not available.
pH : Not available.
Boiling/condensation point : >37.78°C (>100°F)
Melting/freezing point : Not available.
Specific gravity : 1.17
Density (lbs / gal) : 9.76
Vapor pressure : 0.45 kPa (3.4 mm Hg) [20°C]
Vapor density : Not available.
Volatility : 47% (v/v), 40.62% (w/w)
Evaporation rate : 21 (butyl acetate = 1)
Partition coefficient: n-octanol/water : Not available.
% Solid. (w/w) : 59.38

10 . Stability and reactivity

Stability : Stable under recommended storage and handling conditions (see section 7).
Conditions to avoid : Avoid all possible sources of ignition (spark or flame). Do not pressurize, cut, weld, braze, solder, drill, grind or expose containers to heat or sources of ignition.
Materials to avoid : Reactive or incompatible with the following materials:,acids,oxidizing materials,strong alkalis
Hazardous decomposition products : Under normal conditions of storage and use, hazardous decomposition products should not be produced.
Hazardous polymerization : Under normal conditions of storage and use, hazardous polymerization will not occur.

11 . Toxicological information

Acute toxicity

Product/ingredient name	Result	Species	Dose	Exposure
PARACHLOROBENZOTRIFLUORIDE	LD50 Oral	Rat	13 g/kg	-
	LD50 Dermal	Rabbit	>2.7 g/kg	-
	LC50 Inhalation Vapor	Rat	33080 mg/m3	4 hours
heptan-2-one	LD50 Oral	Rat	1.6 g/kg	-
	LD50 Dermal	Rabbit	10.206 g/kg	-
Carbon black	LD50 Oral	Rat	>15400 mg/kg	-
	LD50 Dermal	Rabbit	>3 g/kg	-
methyl methacrylate	LD50 Oral	Rat	7872 mg/kg	-
	LD50 Dermal	Rabbit	>5 g/kg	-
	LC50 Inhalation Vapor	Rat	78000 mg/m3	4 hours
xylene	LD50 Oral	Rat	4.3 g/kg	-
	LD50 Dermal	Rabbit	>1.7 g/kg	-
	LC50 Inhalation Vapor	Rat	5000 ppm	4 hours

Powered by ATRION

11 . Toxicological information

n-butyl acrylate	Vapor LD50 Oral LD50 Dermal LC50 Inhalation Vapor	 Rat Rabbit Rat	 900 mg/kg 2 mL/kg 1970 ppm	 - - 4 hours

Conclusion/Summary : Not available.

Chronic toxicity

Conclusion/Summary : Not available.

Defatting irritant : Prolonged or repeated contact can defat the skin and lead to irritation, cracking and/or dermatitis.

Target organs : Contains material which causes damage to the following organs: brain, central nervous system (CNS).
Contains material which may cause damage to the following organs: lungs, peripheral nervous system, upper respiratory tract, skin, eye, lens or cornea, nose/sinuses, throat.

Carcinogenicity

Carcinogenicity : Contains material which may cause cancer, based on animal data. Risk of cancer depends on duration and level of exposure.

Classification

Product/ingredient name	ACGIH	IARC	EPA	NIOSH	NTP	OSHA
Carbon black	A4	2B	-	+	-	-
methyl methacrylate	A4	3	-	-	-	-
n-butyl acrylate	A4	3	-	-	-	-

Teratogenicity : Contains material which may cause birth defects, based on animal data.

Fertility effects : Contains material which may impair male fertility, based on animal data. Contains material which may impair female fertility, based on animal data.

12 . Ecological information

Environmental effects : No known significant effects or critical hazards.

Aquatic ecotoxicity

Product/ingredient name	Result	Species	Exposure
heptan-2-one	Acute LC50 131000 to 137000 ug/L Fresh water	Fish - Fathead minnow - Pimephales promelas	96 hours
barium sulfate	Acute EC50 32000 ug/L Fresh water	Daphnia - Water flea - Daphnia magna	48 hours
methyl methacrylate	Acute LC50 130000 ug/L Fresh water	Fish - Fathead minnow - Pimephales promelas	96 hours
xylene	Acute LC50 3300 to 4093 ug/L Fresh water	Fish - Rainbow trout,donaldson trout - Oncorhynchus mykiss	96 hours

13 . Disposal considerations

Waste disposal : The generation of waste should be avoided or minimized wherever possible. Significant quantities of waste product residues should not be disposed of via the foul sewer but processed in a suitable effluent treatment plant. Dispose of surplus and non-recyclable products via a licensed waste disposal contractor. Disposal of this product, solutions and any by-products should at all times comply with the requirements of environmental protection and waste disposal legislation and any regional local authority requirements. Waste packaging should be recycled. Incineration or landfill should only be considered when recycling is not feasible. This material and its container must be disposed of in a safe way. Care should be taken when handling emptied containers that have not been cleaned or rinsed out. Empty containers or liners may retain some product residues. Vapor from product residues may create a highly flammable or explosive atmosphere inside the container. Do not cut, weld or grind used containers unless they have been

Powered by ATRION

13 . Disposal considerations

cleaned thoroughly internally. Avoid dispersal of spilled material and runoff and contact with soil, waterways, drains and sewers.

Disposal should be in accordance with applicable regional, national and local laws and regulations.

Refer to Section 7: HANDLING AND STORAGE and Section 8: EXPOSURE CONTROLS/PERSONAL PROTECTION for additional handling information and protection of employees. Section 6. Accidental release measures

14 . Transport information

Regulation	UN number	Proper shipping name	Classes	PG*	Additional information
UN	1263	PAINT	3	II	-
IMDG	1263	PAINT	3	II	-
DOT	1263	PAINT	3	II	-

PG* : Packing group

Reportable quantity RQ : CERCLA: Hazardous substances.: xylene: 100 lbs. (45.4 kg); methyl methacrylate: 1000 lbs. (454 kg);

15 . Regulatory information

United States inventory (TSCA 8b) : All components are listed or exempted.
Australia inventory (AICS) : All components are listed or exempted.
Canada inventory (DSL) : All components are listed or exempted.
China inventory (IECSC) : All components are listed or exempted.
Europe inventory (REACH) : Please contact your supplier for information on the inventory status of this material.
Japan inventory (ENCS) : All components are listed or exempted.
Korea inventory (KECI) : All components are listed or exempted.
New Zealand (NZIoC) : Not determined.
Philippines inventory (PICCS) : All components are listed or exempted.

United States

U.S. Federal regulations :

SARA 302/304/311/312 extremely hazardous substances: No products were found.
SARA 302/304 emergency planning and notification: No products were found.
SARA 302/304/311/312 hazardous chemicals: barium sulfate; heptan-2-one; Carbon black
CERCLA: Hazardous substances.: xylene: 100 lbs. (45.4 kg); methyl methacrylate: 1000 lbs. (454 kg);

SARA 311/312 MSDS Distribution - Chemical Inventory - Hazard Identification:

Chemical name	CAS #	Acute	Chronic	Fire	Reactive	Pressure
PARACHLOROBENZOTRIFLUORIDE	98-56-6	Y	N	Y	N	N
heptan-2-one	110-43-0	Y	N	Y	N	N
barium sulfate	7727-43-7	N	N	N	N	N
Carbon black	1333-86-4	N	Y	N	N	N
Naphtha (petroleum), heavy alkylate	64741-65-7	Y	N	Y	N	N
methyl methacrylate	80-62-6	Y	Y	Y	Y	N
2-(2H-benzotriazol-2-yl)-4,6-ditertpentylphenol	25973-55-1	N	Y	N	N	N
n-butyl acrylate	141-32-2	Y	Y	Y	Y	N
	Product as-supplied :	Y	Y	Y	N	N

Additional environmental information is contained on the Environmental Data Sheet for this product, which can be obtained from your PPG representative.

California Prop. 65

WARNING: This product contains a chemical known to the State of California to cause cancer.

Canada

Powered by ATRION

15 . Regulatory information

WHMIS (Canada) : Class B-2: Flammable liquid with a flash point lower than 37.8°C (100°F). Class D-2A: Material causing other toxic effects (Very toxic). Class D-2B: Material causing other toxic effects (Toxic).

Mexico

Classification

Flammability : 3 **Health** : 2 **Reactivity** : 0

16 . Other information

Hazardous Material Information System (U.S.A.)

Health : 2 * **Flammability** : 3 **Physical hazards** : 0

(*) - Chronic effects

Caution: HMIS® ratings are based on a 0-4 rating scale, with 0 representing minimal hazards or risks, and 4 representing significant hazards or risks Although HMIS® ratings are not required on MSDSs under 29 CFR 1910.1200, the preparer may choose to provide them. HMIS® ratings are to be used with a fully implemented HMIS® program. HMIS® is a registered mark of the National Paint & Coatings Association (NPCA). HMIS® materials may be purchased exclusively from J. J. Keller (800) 327-6868.

The customer is responsible for determining the PPE code for this material.

National Fire Protection Association (U.S.A.)

Health : 2 **Flammability** : 3 **Instability** : 0

Date of previous issue : **2/4/2011.**

Organization that prepared the MSDS : EHS

Indicates information that has changed from previously issued version.

Disclaimer

The information contained in this data sheet is based on present scientific and technical knowledge. The purpose of this information is to draw attention to the health and safety aspects concerning the products supplied by PPG, and to recommend precautionary measures for the storage and handling of the products. No warranty or guarantee is given in respect of the properties of the products. No liability can be accepted for any failure to observe the precautionary measures described in this data sheet or for any misuse of the products.

Powered by ATRION

Material Safety Data Sheet

Date of issue 25 August 2010
Version 29

1 . Product and company identification

Product name : PITTHANE ULTRA COMPONENT B

Code : 95-819

Supplier : PPG Industries, Inc.
One PPG Place
Pittsburgh, PA 15272

Emergency telephone number : (412) 434-4515 (U.S.)
(514) 645-1320 (Canada)
01-800-00-21-400 (Mexico)

Technical Phone Number : 1-800-441-9695 (8:00 am to 5:00 pm EST)

2 . Hazards identification

Emergency overview : WARNING!

CAUSES RESPIRATORY TRACT AND EYE IRRITATION. MAY CAUSE ALLERGIC RESPIRATORY AND SKIN REACTION. SKIN CONTACT TO ISOCYANATE MONOMER MAY LEAD TO ALLERGIC LUNG REACTION. MAY BE HARMFUL IF INHALED OR SWALLOWED. MAY CAUSE SKIN IRRITATION.

Do not breathe vapor or mist. Do not get in eyes or on skin or clothing. Use only with adequate ventilation. Keep container tightly closed and sealed until ready for use. Wash thoroughly after handling.

Potential acute health effects

Inhalation : May be harmful if inhaled. Irritating to respiratory system. Can irritate eyes, nose, mouth and throat. May cause sensitization by inhalation. Exposure to decomposition products may cause a health hazard. Serious effects may be delayed following exposure.

Ingestion : May be harmful if swallowed.

Skin : Moderately irritating to the skin. May cause an allergic skin reaction.

Eyes : Severely irritating to eyes. Risk of serious damage to eyes.

Over-exposure signs/symptoms

Based on the properties of the isocyanate components and considering toxicological data on similar preparations, this preparation may cause acute irritation and/or sensitization of the respiratory system, leading to an asthmatic condition, wheezing and tightness of the chest. Sensitized persons may subsequently show asthmatic symptoms when exposed to atmospheric concentrations well below the OEL. Repeated exposure may lead to permanent respiratory disability.

Medical conditions aggravated by over-exposure : Pre-existing respiratory and skin disorders may be aggravated by over-exposure to this product.

This Material Safety Data Sheet has been prepared in accordance with Canada's Workplace Hazardous Materials Information System (WHMIS) and the OSHA Hazard Communication Standard (29 CFR 1910.1200).

See toxicological information (section 11)

3 . Composition/information on ingredients

Name	CAS number	%
Isocyanic acid, hexamethylene ester, polymers	28182-81-2	60 - 100
hexamethylene-di-isocyanate	822-06-0	0.1 - 1

There are no additional ingredients present which, within the current knowledge of the supplier and in the concentrations applicable, are classified as hazardous to health or the environment and hence require reporting in this section.

Powered by ATRION

4 . First aid measures

If ingestion, irritation, any type of overexposure or symptoms of overexposure occur during or persists after use of this product, contact a POISON CONTROL CENTER, EMERGENCY ROOM OR PHYSICIAN immediately; have Material Safety Data Sheet information available. Never give anything by mouth to an unconscious or convulsing person.

Eye contact : Check for and remove any contact lenses. Immediately flush eyes with running water for at least 15 minutes, keeping eyelids open.

Skin contact : Remove contaminated clothing and shoes. Wash skin thoroughly with soap and water or use recognized skin cleanser. Do NOT use solvents or thinners.

Inhalation : Remove to fresh air. Keep person warm and at rest. If not breathing, if breathing is irregular or if respiratory arrest occurs, provide artificial respiration or oxygen by trained personnel.

Ingestion : If swallowed, seek medical advice immediately and show this container or label. Keep person warm and at rest. Do not induce vomiting.

Notes to physician : In case of inhalation of decomposition products in a fire, symptoms may be delayed. The exposed person may need to be kept under medical surveillance for 48 hours.

5 . Fire-fighting measures

Flammability of the product : In a fire or if heated, a pressure increase will occur and the container may burst.

Extinguishing media

Suitable : Use an extinguishing agent suitable for the surrounding fire.

Not suitable : None known.

Special exposure hazards : Promptly isolate the scene by removing all persons from the vicinity of the incident if there is a fire. No action shall be taken involving any personal risk or without suitable training.

Hazardous combustion products : Decomposition products may include the following materials:
carbon oxides
nitrogen oxides
Hydrogen cyanide (HCN).
Cyanate and isocyanate.

Special protective equipment for fire-fighters : Fire-fighters should wear appropriate protective equipment and self-contained breathing apparatus (SCBA) with a full face-piece operated in positive pressure mode.

6 . Accidental release measures

Personal precautions : No action shall be taken involving any personal risk or without suitable training. Evacuate surrounding areas. Keep unnecessary and unprotected personnel from entering. Do not touch or walk through spilled material. Avoid breathing vapor or mist. Provide adequate ventilation. Wear appropriate respirator when ventilation is inadequate. Put on appropriate personal protective equipment (see section 8).

Environmental precautions : Avoid dispersal of spilled material and runoff and contact with soil, waterways, drains and sewers. Inform the relevant authorities if the product has caused environmental pollution (sewers, waterways, soil or air).

Large spill : Stop leak if without risk. Move containers from spill area. Approach release from upwind. Prevent entry into sewers, water courses, basements or confined areas. Wash spillages into an effluent treatment plant or proceed as follows. Contain and collect spillage with non-combustible, absorbent material e.g. sand, earth, vermiculite or diatomaceous earth and place in container for disposal according to local regulations (see section 13). Dispose of via a licensed waste disposal contractor. Contaminated absorbent material may pose the same hazard as the spilled product. Note: see section 1 for emergency contact information and section 13 for waste disposal.

Small spill : Stop leak if without risk. Move containers from spill area. Dilute with water and mop up if water-soluble or absorb with an inert dry material and place in an appropriate waste disposal container. Dispose of via a licensed waste disposal contractor.

Powered by ATRION

6 . Accidental release measures

Special provisions : Contain and collect spillage with non-combustible, absorbent material e.g. sand, earth, vermiculite or diatomaceous earth and place in container for disposal according to local regulations (see section 13). Place in a suitable container. The contaminated area should be cleaned immediately with a suitable decontaminant. One possible (flammable) decontaminant comprises (by volume): water (45 parts), ethanol or isopropyl alcohol (50 parts) and concentrated (d: 0,880) ammonia solution (5 parts). A non-flammable alternative is sodium carbonate (5 parts) and water (95 parts). Add the same decontaminant to the remnants and let stand for several days until no further reaction in an unsealed container. Once this stage is reached, close container and dispose of according to local regulations (see section 13). Do not allow to enter drains or watercourses. If the product contaminates lakes, rivers, or sewers, inform the appropriate authorities in accordance with local regulations.

7 . Handling and storage

Handling : Put on appropriate personal protective equipment (see section 8). Eating, drinking and smoking should be prohibited in areas where this material is handled, stored and processed. Persons with a history of skin sensitization problems or asthma, allergies or chronic or recurrent respiratory disease should not be employed in any process in which this product is used. Do not breathe vapor or mist. Do not swallow. Do not get in eyes or on skin or clothing. Use only with adequate ventilation. Wear appropriate respirator when ventilation is inadequate. Keep in the original container or an approved alternative made from a compatible material, kept tightly closed when not in use. Empty containers retain product residue and can be hazardous. Do not reuse container.

Storage : Store in accordance with local regulations. Store in original container protected from direct sunlight in a dry, cool and well-ventilated area, away from incompatible materials (see section 10) and food and drink. Precautions should be taken to minimize exposure to atmospheric humidity or water. CO_2 will be formed, which, in closed containers, could result in pressurization. Keep container tightly closed and sealed until ready for use. Containers that have been opened must be carefully resealed and kept upright to prevent leakage. Do not store in unlabeled containers. Use appropriate containment to avoid environmental contamination.

8 . Exposure controls/personal protection

Name	Result	ACGIH	OSHA	Ontario	Mexico	PPG
Isocyanic acid, hexamethylene ester, polymers	TWA	Not established	Not established	Not established	Not established	0.5 mg/m³
	STEL	Not established	Not established	Not established	Not established	1 mg/m³
hexamethylene-di-isocyanate	TWA	0.01 ppm	Not established	Not established	Not established	Not established

Key to abbreviations

A = Acceptable Maximum Peak
ACGIH = American Conference of Governmental Industrial Hygienists.
C = Ceiling Limit
F = Fume
IPEL = Internal Permissible Exposure Limit
OSHA = Occupational Safety and Health Administration.
R = Respirable
Z = OSHA 29CFR 1910.1200 Subpart Z - Toxic and Hazardous Substances
S = Potential skin absorption
SR = Respiratory sensitization
SS = Skin sensitization
STEL = Short term Exposure limit values
TD = Total dust
TLV = Threshold Limit Value
TWA = Time Weighted Average

Consult local authorities for acceptable exposure limits.

Recommended monitoring procedures : If this product contains ingredients with exposure limits, personal, workplace atmosphere or biological monitoring may be required to determine the effectiveness of the ventilation or other control measures and/or the necessity to use respiratory protective equipment.

Powered by ATRION

8 . Exposure controls/personal protection

Engineering measures : Use only with adequate ventilation. If user operations generate dust, fumes, gas, vapor or mist, use process enclosures, local exhaust ventilation or other engineering controls to keep worker exposure to airborne contaminants below any recommended or statutory limits.

Hygiene measures : Wash hands, forearms and face thoroughly after handling chemical products, before eating, smoking and using the lavatory and at the end of the working period. Appropriate techniques should be used to remove potentially contaminated clothing. Wash contaminated clothing before reusing. Ensure that eyewash stations and safety showers are close to the workstation location.

Personal protection

Eyes : Chemical splash goggles.

Hands : Chemical-resistant, impervious gloves complying with an approved standard should be worn at all times when handling chemical products if a risk assessment indicates this is necessary.

Gloves : butyl rubber

Respiratory : By spraying: air-fed respirator. By other operations than spraying, in well ventilated areas, air-fed respirators could be replaced by a combination charcoal filter and particulate filter mask. Respirator selection must be based on known or anticipated exposure levels, the hazards of the product and the safe working limits of the selected respirator.

Skin : Personal protective equipment for the body should be selected based on the task being performed and the risks involved and should be approved by a specialist before handling this product.

Environmental exposure controls : Emissions from ventilation or work process equipment should be checked to ensure they comply with the requirements of environmental protection legislation. In some cases, fume scrubbers, filters or engineering modifications to the process equipment will be necessary to reduce emissions to acceptable levels.

Restrictions on use : Persons with a history of asthma, allergies or chronic or recurrent respiratory disease should not be employed in any process in which this product is used.

9 . Physical and chemical properties

Physical state : Liquid.

Flash point : Closed cup: 166.11°C (331°F)

Color : Not available.

Odor : Not available.

pH : Not available.

Boiling/condensation point : >37.78°C (>100°F)

Melting/freezing point : Not available.

Specific gravity : 1.17

Density (lbs / gal) : 9.76

Vapor pressure : 0 kPa (0 mm Hg)

Vapor density : Not available.

Volatility : 0% (v/v), 0% (w/w)

Odor threshold : Not available.

Evaporation rate : 0 (butyl acetate = 1)

Partition coefficient: n-octanol/water : Not available.

% Solid. (w/w) : 100

Powered by ATRION

10 . Stability and reactivity

Stability : The product may not be stable under certain conditions of storage or use.

Conditions to avoid : Uncontrolled exothermic reactions occur with amines and alcohols. The product reacts slowly with water, resulting in the production of carbon dioxide. In closed containers, pressure buildup could result in distortion, expansion and, in extreme cases, bursting of the container. Avoid increased storage temperature. Pressure hazard

Materials to avoid : No specific data.

Hazardous decomposition products : Cyanate and isocyanate.

Hazardous polymerization : Under normal conditions of storage and use, hazardous polymerization will not occur.

11 . Toxicological information

Acute toxicity

Product/ingredient name	Result	Species	Dose	Exposure
Isocyanic acid, hexamethylene ester, polymers	LC50 Inhalation	Rat	18500 mg/m3	1 hours
hexamethylene-di-isocyanate	LD50 Oral	Rat	0.71 g/kg	-
	LD50 Dermal	Rabbit	0.57 g/kg	-
	LC50 Inhalation Vapor	Rat	151 mg/m³	4 hours

Chronic toxicity

Conclusion/Summary : Not available.

Carcinogenicity

Carcinogenicity : No known significant effects or critical hazards.

Mutagenicity

Mutagenicity : No known significant effects or critical hazards.

Teratogenicity

Teratogenicity : No known significant effects or critical hazards.

Reproductive toxicity

Developmental effects : No known significant effects or critical hazards.

Fertility effects : No known significant effects or critical hazards.

12 . Ecological information

Environmental effects : No known significant effects or critical hazards.

Other adverse effects : No known significant effects or critical hazards.

13 . Disposal considerations

Waste disposal : The generation of waste should be avoided or minimized wherever possible. Empty containers or liners may retain some product residues. This material and its container must be disposed of in a safe way. Dispose of surplus and non-recyclable products via a licensed waste disposal contractor. Disposal of this product, solutions and any by-products should at all times comply with the requirements of environmental protection and waste disposal legislation and any regional local authority requirements. Avoid dispersal of spilled material and runoff and contact with soil, waterways, drains and sewers.

Disposal should be in accordance with applicable regional, national and local laws and regulations.

Refer to Section 7: HANDLING AND STORAGE and Section 8: EXPOSURE CONTROLS/PERSONAL PROTECTION for additional handling information and protection of employees. Section 6. Accidental release measures

Powered by ATRION

14 . Transport information

Regulation	UN number	Proper shipping name	Classes	PG*	Additional information
UN	None.	Not regulated.	None.	-	-
IMDG	None.	Not regulated.	None.	-	-
DOT	None.	Not regulated.	None.	-	-

PG* : Packing group

Reportable quantity RQ : CERCLA: Hazardous substances.: hexamethylene-di-isocyanate: 100 lbs. (45.4 kg);

15 . Regulatory information

United States inventory (TSCA 8b) : All components are listed or exempted.
Australia inventory (AICS) : All components are listed or exempted.
Canada inventory (DSL) : All components are listed or exempted.
China inventory (IECSC) : All components are listed or exempted.
Europe inventory (REACH) : Please contact your supplier for information on the inventory status of this material.
Japan inventory (ENCS) : All components are listed or exempted.
Korea inventory (KECI) : All components are listed or exempted.
New Zealand (NZIoC) : All components are listed or exempted.
Philippines inventory (PICCS) : All components are listed or exempted.

United States

U.S. Federal regulations : **TSCA 12(b) annual export notification**: No products were found.
TSCA 12(b) one-time export: No products were found.
SARA 302/304/311/312 extremely hazardous substances: No products were found.
SARA 302/304 emergency planning and notification: No products were found.
SARA 302/304/311/312 hazardous chemicals: No products were found.
CERCLA: Hazardous substances.: hexamethylene-di-isocyanate: 100 lbs. (45.4 kg);

SARA 311/312 MSDS Distribution - Chemical Inventory - Hazard Identification:

Chemical name	CAS #	Acute	Chronic	Fire	Reactive	Pressure
Isocyanic acid, hexamethylene ester, polymers	28182-81-2	Y	N	N	Y	N
hexamethylene-di-isocyanate	822-06-0	Y	N	N	Y	N
Product as-supplied :		Y	N	N	Y	N

Additional environmental information is contained on the Environmental Data Sheet for this product, which can be obtained from your PPG representative.

Canada

WHMIS (Canada) : Class D-2A: Material causing other toxic effects (Very toxic). Class D-2B: Material causing other toxic effects (Toxic).

Mexico

Classification

Flammability : 1 **Health** : 3 **Reactivity** : 1

16 . Other information

Hazardous Material Information System (U.S.A.)

Health : 3 * **Flammability** : 1 **Physical hazards** : 1

(*) - Chronic effects

Powered by ATRION

16 . Other information

Caution: HMIS® ratings are based on a 0-4 rating scale, with 0 representing minimal hazards or risks, and 4 representing significant hazards or risks Although HMIS® ratings are not required on MSDSs under 29 CFR 1910.1200, the preparer may choose to provide them. HMIS® ratings are to be used with a fully implemented HMIS® program. HMIS® is a registered mark of the National Paint & Coatings Association (NPCA). HMIS® materials may be purchased exclusively from J. J. Keller (800) 327-6868.

The customer is responsible for determining the PPE code for this material.

National Fire Protection Association (U.S.A.)

Health : 3 **Flammability** : 1 **Instability** : 1

Date of previous issue : **9/1/2009.**

Organization that prepared the MSDS : EHS

◤ **Indicates information that has changed from previously issued version.**

Disclaimer

The information contained in this data sheet is based on present scientific and technical knowledge. The purpose of this information is to draw attention to the health and safety aspects concerning the products supplied by PPG, and to recommend precautionary measures for the storage and handling of the products. No warranty or guarantee is given in respect of the properties of the products. No liability can be accepted for any failure to observe the precautionary measures described in this data sheet or for any misuse of the products.

Powered by ATRION

Material Safety Data Sheet

Date of issue 29 March 2011
Version 17

1 . Product and company identification

Product name : 2.08 VOC URETHANE NEUTRAL BASE

Code : 95-8000

Supplier : PPG Industries, Inc.
One PPG Place
Pittsburgh, PA 15272

Emergency telephone number : (412) 434-4515 (U.S.)
(514) 645-1320 (Canada)
01-800-00-21-400 (Mexico)

Technical Phone Number : (412) 492-5200 (ALLISON PARK, PA) 8:00 a.m. - 5:00 p.m. EST

2 . Hazards identification

Emergency overview : DANGER!

FLAMMABLE LIQUID AND VAPOR. CAUSES RESPIRATORY TRACT IRRITATION. MAY BE HARMFUL IF INHALED OR SWALLOWED. ASPIRATION HAZARD. CAN ENTER LUNGS AND CAUSE DAMAGE. MAY CAUSE EYE IRRITATION. PROLONGED OR REPEATED CONTACT MAY DRY SKIN AND CAUSE IRRITATION. CONTAINS MATERIAL THAT CAN CAUSE TARGET ORGAN DAMAGE.

Keep away from flames, such as a pilot light, and any object that sparks, such as an electric motor. Keep away from heat. Do not smoke. Do not swallow. Avoid breathing vapor or mist. Avoid contact with eyes, skin and clothing. Use only with adequate ventilation. Keep container tightly closed and sealed until ready for use. Wash thoroughly after handling.

Potential acute health effects

Inhalation : May be harmful if inhaled. Irritating to respiratory system. Can irritate eyes, nose, mouth and throat.

Ingestion : May be harmful if swallowed. Aspiration hazard if swallowed. Can enter lungs and cause damage.

Skin : May cause skin dryness and irritation.

Eyes : Moderately irritating to eyes.

Over-exposure signs/symptoms

Repeated exposure to high vapor concentrations may cause irritation of the respiratory system and permanent brain and nervous system damage. Inhalation of vapor/aerosol concentrations above the recommended exposure limits causes headaches, drowsiness and nausea and may lead to unconsciousness or death. There is some evidence that repeated exposure to organic solvent vapors in combination with constant loud noise can cause greater hearing loss than expected from exposure to noise alone.

Medical conditions aggravated by over-exposure : Pre-existing disorders involving any target organs mentioned in this MSDS as being at risk may be aggravated by over-exposure to this product.

This Material Safety Data Sheet has been prepared in accordance with Canada's Workplace Hazardous Materials Information System (WHMIS) and the OSHA Hazard Communication Standard (29 CFR 1910.1200).

See toxicological information (Section 11)

Powered by ATRION

3 . Composition/information on ingredients

Name	CAS number	%
heptan-2-one	110-43-0	10 - 30
PARACHLOROBENZOTRIFLUORIDE	98-56-6	1 - 5
Naphtha (petroleum), heavy alkylate	64741-65-7	0.5 - 1.5
xylene	1330-20-7	0.1 - 1
Methyl methacrylate	80-62-6	0.1 - 1
2-(2H-benzotriazol-2-yl)-4,6-ditertpentylphenol	25973-55-1	0.1 - 1
n-Butyl acrylate	141-32-2	0.1 - 1
ethylbenzene	100-41-4	0.1 - 1

There are no additional ingredients present which, within the current knowledge of the supplier and in the concentrations applicable, are classified as hazardous to health or the environment and hence require reporting in this section.

4 . First aid measures

If ingestion, irritation, any type of overexposure or symptoms of overexposure occur during or persists after use of this product, contact a POISON CONTROL CENTER, EMERGENCY ROOM OR PHYSICIAN immediately; have Material Safety Data Sheet information available. Never give anything by mouth to an unconscious or convulsing person.

Eye contact : Check for and remove any contact lenses. Immediately flush eyes with running water for at least 15 minutes, keeping eyelids open. Seek immediate medical attention.

Skin contact : Remove contaminated clothing and shoes. Wash skin thoroughly with soap and water or use recognized skin cleanser. Do NOT use solvents or thinners.

Inhalation : Remove to fresh air. Keep person warm and at rest. If not breathing, if breathing is irregular or if respiratory arrest occurs, provide artificial respiration or oxygen by trained personnel.

Ingestion : If swallowed, seek medical advice immediately and show this container or label. Keep person warm and at rest. Do not induce vomiting.

Notes to physician : No specific treatment. Treat symptomatically. Contact poison treatment specialist immediately if large quantities have been ingested or inhaled.

5 . Fire-fighting measures

Flammability of the product : Flammable liquid. In a fire or if heated, a pressure increase will occur and the container may burst, with the risk of a subsequent explosion. Vapors may accumulate in low or confined areas or travel a considerable distance to a source of ignition and flash back. Runoff to sewer may create fire or explosion hazard.

Extinguishing media

Suitable : Use dry chemical, CO_2, water spray (fog) or foam.

Not suitable : Do not use water jet.

Special exposure hazards : Promptly isolate the scene by removing all persons from the vicinity of the incident if there is a fire. No action shall be taken involving any personal risk or without suitable training. Move containers from fire area if this can be done without risk. Use water spray to keep fire-exposed containers cool.

Hazardous combustion products : Decomposition products may include the following materials:
carbon oxides

Special protective equipment for fire-fighters : Fire-fighters should wear appropriate protective equipment and self-contained breathing apparatus (SCBA) with a full face-piece operated in positive pressure mode.

6 . Accidental release measures

Personal precautions : No action shall be taken involving any personal risk or without suitable training. Evacuate surrounding areas. Keep unnecessary and unprotected personnel from entering. Do not touch or walk through spilled material. Shut off all ignition sources. No flares, smoking or flames in hazard area. Avoid breathing vapor or mist. Provide adequate ventilation. Wear appropriate respirator when ventilation is inadequate. Put on appropriate personal protective equipment (see Section 8).

Powered by ATRION

6 . Accidental release measures

Environmental precautions : Avoid dispersal of spilled material and runoff and contact with soil, waterways, drains and sewers. Inform the relevant authorities if the product has caused environmental pollution (sewers, waterways, soil or air).

Large spill : Stop leak if without risk. Move containers from spill area. Approach release from upwind. Use spark-proof tools and explosion-proof equipment. Prevent entry into sewers, water courses, basements or confined areas. Wash spillages into an effluent treatment plant or proceed as follows. Contain and collect spillage with non-combustible, absorbent material e.g. sand, earth, vermiculite or diatomaceous earth and place in container for disposal according to local regulations (see section 13). Dispose of via a licensed waste disposal contractor. Contaminated absorbent material may pose the same hazard as the spilled product. Note: see section 1 for emergency contact information and section 13 for waste disposal.

Small spill : Stop leak if without risk. Move containers from spill area. Use spark-proof tools and explosion-proof equipment. Dilute with water and mop up if water-soluble or absorb with an inert dry material and place in an appropriate waste disposal container. Dispose of via a licensed waste disposal contractor.

7 . Handling and storage

Handling : Put on appropriate personal protective equipment (see Section 8). Eating, drinking and smoking should be prohibited in areas where this material is handled, stored and processed. Do not swallow. Do not get in eyes or on skin or clothing. Avoid breathing vapor or mist. Use only with adequate ventilation. Wear appropriate respirator when ventilation is inadequate. Do not enter storage areas and confined spaces unless adequately ventilated. Keep in the original container or an approved alternative made from a compatible material, kept tightly closed when not in use. Store and use away from heat, sparks, open flame or any other ignition source. Use explosion-proof electrical (ventilating, lighting and material handling) equipment. Use non-sparking tools. Take precautionary measures against electrostatic discharges. Vapors are heavier than air and may spread along floors. To avoid fire or explosion, dissipate static electricity during transfer by grounding and bonding containers and equipment before transferring material. Empty containers retain product residue and can be hazardous. Do not reuse container. If this material is part of a multiple component system, read the Material Safety Data Sheet(s) for the other component or components before blending as the resulting mixture may have the hazards of all of its parts.

Storage : Store in accordance with local regulations. Store in a segregated and approved area. Store in original container protected from direct sunlight in a dry, cool and well-ventilated area, away from incompatible materials (see section 10) and food and drink. Eliminate all ignition sources. Separate from oxidizing materials. Keep container tightly closed and sealed until ready for use. Containers that have been opened must be carefully resealed and kept upright to prevent leakage. Do not store in unlabeled containers. Use appropriate containment to avoid environmental contamination. Do not store above the following temperature: 120F / 49C.

8 . Exposure controls/personal protection

Name	Result	ACGIH	OSHA	Ontario	Mexico	PPG
heptan-2-one	TWA	50 ppm	100 ppm	25 ppm	50 ppm	Not established
	STEL	Not established	Not established	Not established	100 ppm	Not established
PARACHLOROBENZOTRIFLUORIDE	TWA	Not established	Not established	Not established	Not established	25 ppm
xylene	TWA	100 ppm	100 ppm	100 ppm	100 ppm	Not established
	STEL	150 ppm	Not established	150 ppm	150 ppm	Not established

Powered by ATRION

8 . Exposure controls/personal protection

Methyl methacrylate	TWA	50 ppm SS	100 ppm	50 ppm SS	100 ppm	Not established
	STEL	100 ppm SS	Not established	100 ppm SS	125 ppm	Not established
n-Butyl acrylate	TWA	2 ppm SS	Not established	2 ppm SS	10 ppm	Not established
ethylbenzene	TWA	100 ppm	100 ppm	100 ppm	100 ppm	Not established
	STEL	125 ppm	Not established	125 ppm	125 ppm	Not established

Key to abbreviations

A = Acceptable Maximum Peak
ACGIH = American Conference of Governmental Industrial Hygienists.
C = Ceiling Limit
F = Fume
IPEL = Internal Permissible Exposure Limit
OSHA = Occupational Safety and Health Administration.
R = Respirable
Z = OSHA 29CFR 1910.1200 Subpart Z - Toxic and Hazardous Substances
S = Potential skin absorption
SR = Respiratory sensitization
SS = Skin sensitization
STEL = Short term Exposure limit values
TD = Total dust
TLV = Threshold Limit Value
TWA = Time Weighted Average

Consult local authorities for acceptable exposure limits.

Recommended monitoring procedures : If this product contains ingredients with exposure limits, personal, workplace atmosphere or biological monitoring may be required to determine the effectiveness of the ventilation or other control measures and/or the necessity to use respiratory protective equipment.

Engineering measures : Use only with adequate ventilation. Use process enclosures, local exhaust ventilation or other engineering controls to keep worker exposure to airborne contaminants below any recommended or statutory limits. The engineering controls also need to keep gas, vapor or dust concentrations below any lower explosive limits. Use explosion-proof ventilation equipment.

Hygiene measures : Wash hands, forearms and face thoroughly after handling chemical products, before eating, smoking and using the lavatory and at the end of the working period. Appropriate techniques should be used to remove potentially contaminated clothing. Wash contaminated clothing before reusing. Ensure that eyewash stations and safety showers are close to the workstation location.

Personal protection

Eyes : Safety glasses with side shields.

Hands : Chemical-resistant, impervious gloves complying with an approved standard should be worn at all times when handling chemical products if a risk assessment indicates this is necessary.

Respiratory : If workers are exposed to concentrations above the exposure limit, they must use appropriate, certified respirators. Use a properly fitted, air-purifying or air-fed respirator complying with an approved standard if a risk assessment indicates this is necessary. Respirator selection must be based on known or anticipated exposure levels, the hazards of the product and the safe working limits of the selected respirator.

Skin : Personal protective equipment for the body should be selected based on the task being performed and the risks involved and should be approved by a specialist before handling this product.

Environmental exposure controls : Emissions from ventilation or work process equipment should be checked to ensure they comply with the requirements of environmental protection legislation. In some cases, fume scrubbers, filters or engineering modifications to the process equipment will be necessary to reduce emissions to acceptable levels.

Powered by ATRION

9 . Physical and chemical properties

Physical state	:	Liquid.
Flash point	:	Closed cup: 21.67°C (71°F)
Explosion limits	:	Lower: 1.1%
Color	:	Not available.
Odor	:	Not available.
pH	:	Not available.
Boiling/condensation point	:	>37.78°C (>100°F)
Melting/freezing point	:	Not available.
Specific gravity	:	1.04
Density (lbs / gal)	:	8.68
Vapor pressure	:	0.36 kPa (2.7 mm Hg) [20°C]
Vapor density	:	Not available.
Volatility	:	40% (v/v), 33.3% (w/w)
Odor threshold	:	Not available.
Evaporation rate	:	36 (butyl acetate = 1)
Partition coefficient: n-octanol/water	:	Not available.
% Solid. (w/w)	:	66.7

10 . Stability and reactivity

Stability	:	Stable under recommended storage and handling conditions (see section 7).
Conditions to avoid	:	Avoid all possible sources of ignition (spark or flame). Do not pressurize, cut, weld, braze, solder, drill, grind or expose containers to heat or sources of ignition.
Materials to avoid	:	Reactive or incompatible with the following materials:,oxidizing materials,strong acids,strong alkalis
Hazardous decomposition products	:	Under normal conditions of storage and use, hazardous decomposition products should not be produced.
Hazardous polymerization	:	Under normal conditions of storage and use, hazardous polymerization will not occur.

11 . Toxicological information

Acute toxicity

Product/ingredient name	Result	Species	Dose	Exposure
heptan-2-one	LD50 Oral	Rat	1.6 g/kg	-
	LD50 Dermal	Rabbit	10.206 g/kg	-
PARACHLOROBENZOTRIFLUORIDE	LD50 Oral	Rat	13 g/kg	-
	LD50 Dermal	Rabbit	>2.7 g/kg	-
	LC50 Inhalation Vapor	Rat	33080 mg/m3	4 hours
xylene	LD50 Oral	Rat	4.3 g/kg	-
	LD50 Dermal	Rabbit	>1.7 g/kg	-
	LC50 Inhalation Vapor	Rat	5000 ppm	4 hours
Methyl methacrylate	LD50 Oral	Rat	7872 mg/kg	-
	LD50 Dermal	Rabbit	>5 g/kg	-
	LC50 Inhalation Vapor	Rat	78000 mg/m3	4 hours
2-(2H-benzotriazol-2-yl)-4,6-ditertpentylphenol	LD50 Oral	Rat	>2325 mg/kg	-
n-Butyl acrylate	LD50 Oral	Rat	900 mg/kg	-
	LD50 Dermal	Rabbit	2 mL/kg	-

Powered by ATRION

11 . Toxicological information

	LC50 Inhalation Vapor	Rat	1970 ppm	4 hours
ethylbenzene	LD50 Oral	Rat	3.5 g/kg	-
	LD50 Dermal	Rabbit	>5000 mg/kg	-
	LC50 Inhalation Vapor	Rat	4000 ppm	4 hours

Chronic toxicity

Conclusion/Summary : Not available.

Defatting irritant : Prolonged or repeated contact can defat the skin and lead to irritation, cracking and/or dermatitis.

Target organs : Contains material which causes damage to the following organs: brain, central nervous system (CNS).
Contains material which may cause damage to the following organs: peripheral nervous system, upper respiratory tract, skin, eye, lens or cornea, nose/sinuses, throat.

Carcinogenicity

Carcinogenicity : Contains material which may cause cancer, based on animal data. Risk of cancer depends on duration and level of exposure.

Classification

Product/ingredient name	ACGIH	IARC	EPA	NIOSH	NTP	OSHA
Methyl methacrylate	A4	3	-	-	-	-
n-Butyl acrylate	A4	3	-	-	-	-
ethylbenzene	A3	2B	-	-	-	-

Mutagenicity

Mutagenicity : No known significant effects or critical hazards.

Teratogenicity

Teratogenicity : Contains material which may cause birth defects, based on animal data.

Reproductive toxicity

Developmental effects : No known significant effects or critical hazards.

Fertility effects : Contains material which may impair male fertility, based on animal data. Contains material which may impair female fertility, based on animal data.

12 . Ecological information

Environmental effects : No known significant effects or critical hazards.

Aquatic ecotoxicity

Product/ingredient name	Result	Species	Exposure
heptan-2-one	Acute LC50 131000 to 137000 ug/L Fresh water	Fish - Fathead minnow - Pimephales promelas	96 hours
xylene	Acute LC50 3300 to 4093 ug/L Fresh water	Fish - Rainbow trout,donaldson trout - Oncorhynchus mykiss	96 hours
Methyl methacrylate	Acute LC50 130000 ug/L Fresh water	Fish - Fathead minnow - Pimephales promelas	96 hours
ethylbenzene	Acute LC50 4200 ug/L Fresh water	Fish - Rainbow trout,donaldson trout - Oncorhynchus mykiss	96 hours
	Acute LC50 5100 to 5700 ug/L Marine water	Fish - Atlantic silverside - Menidia menidia	96 hours
	Acute EC50 2930 to 4400 ug/L Fresh water	Daphnia - Water flea - Daphnia magna	48 hours
	Chronic NOEC 3300 ug/L Marine water	Fish - Atlantic silverside - Menidia menidia	96 hours

Powered by ATRION

12 . Ecological information

	Chronic NOEC 6800 ug/L Fresh water	Daphnia - Water flea - Daphnia magna	48 hours

13 . Disposal considerations

Waste disposal : The generation of waste should be avoided or minimized wherever possible. Significant quantities of waste product residues should not be disposed of via the foul sewer but processed in a suitable effluent treatment plant. Dispose of surplus and non-recyclable products via a licensed waste disposal contractor. Disposal of this product, solutions and any by-products should at all times comply with the requirements of environmental protection and waste disposal legislation and any regional local authority requirements. Waste packaging should be recycled. Incineration or landfill should only be considered when recycling is not feasible. This material and its container must be disposed of in a safe way. Care should be taken when handling emptied containers that have not been cleaned or rinsed out. Empty containers or liners may retain some product residues. Vapor from product residues may create a highly flammable or explosive atmosphere inside the container. Do not cut, weld or grind used containers unless they have been cleaned thoroughly internally. Avoid dispersal of spilled material and runoff and contact with soil, waterways, drains and sewers.

Disposal should be in accordance with applicable regional, national and local laws and regulations.

Refer to Section 7: HANDLING AND STORAGE and Section 8: EXPOSURE CONTROLS/PERSONAL PROTECTION for additional handling information and protection of employees. Section 6. Accidental release measures

14 . Transport information

Regulation	UN number	Proper shipping name	Classes	PG*	Additional information
UN	1263	PAINT	3	II	-
IMDG	1263	PAINT	3	II	-
DOT	1263	PAINT (heptan-2-one)	3	II	-

PG* : Packing group

Reportable quantity RQ : CERCLA: Hazardous substances.: ethylbenzene: 1000 lbs. (454 kg); m-Xylene: 1000 lbs. (454 kg); xylene: 100 lbs. (45.4 kg); Methyl methacrylate: 1000 lbs. (454 kg);

15 . Regulatory information

United States inventory (TSCA 8b) : All components are listed or exempted.
Australia inventory (AICS) : Not determined.
Canada inventory (DSL) : All components are listed or exempted.
China inventory (IECSC) : All components are listed or exempted.
Europe inventory (REACH) : Please contact your supplier for information on the inventory status of this material.
Japan inventory (ENCS) : All components are listed or exempted.
Korea inventory (KECI) : All components are listed or exempted.
New Zealand (NZIoC) : Not determined.

Philippines inventory (PICCS) : Not determined.

United States

U.S. Federal regulations :

SARA 302/304/311/312 extremely hazardous substances: No products were found.
SARA 302/304 emergency planning and notification: No products were found.
SARA 302/304/311/312 hazardous chemicals: heptan-2-one
CERCLA: Hazardous substances.: ethylbenzene: 1000 lbs. (454 kg); m-Xylene: 1000 lbs. (454 kg); xylene: 100 lbs. (45.4 kg); Methyl methacrylate: 1000 lbs. (454 kg);

Powered by ATRION

15 . Regulatory information

SARA 311/312 MSDS Distribution - Chemical Inventory - Hazard Identification:

Chemical name	CAS #	Acute	Chronic	Fire	Reactive	Pressure
heptan-2-one	110-43-0	Y	N	Y	N	N
PARACHLOROBENZOTRIFLUORIDE	98-56-6	Y	N	N	N	N
Naphtha (petroleum), heavy alkylate	64741-65-7	Y	N	Y	N	N
Methyl methacrylate	80-62-6	Y	Y	Y	Y	N
2-(2H-benzotriazol-2-yl)-4,6-ditertpentylphenol	25973-55-1	N	Y	N	N	N
n-Butyl acrylate	141-32-2	Y	Y	Y	Y	N
ethylbenzene	100-41-4	Y	Y	Y	N	N
	Product as-supplied :	Y	Y	Y	N	N

SARA 313	Chemical name	CAS number	Concentration
Supplier notification :	ethylbenzene	100-41-4	0.1 - 1

Additional environmental information is contained on the Environmental Data Sheet for this product, which can be obtained from your PPG representative.

California Prop. 65

WARNING: This product contains a chemical known to the State of California to cause cancer.

Canada

WHMIS (Canada) : Class B-2: Flammable liquid with a flash point lower than 37.8°C (100°F). Class D-2A: Material causing other toxic effects (Very toxic). Class D-2B: Material causing other toxic effects (Toxic).

Mexico

Classification

Flammability : 3 **Health** : 2 **Reactivity** : 0

16 . Other information

Hazardous Material Information System (U.S.A.)

Health : 2 * **Flammability** : 3 **Physical hazards** : 0

(*) - Chronic effects

Caution: HMIS® ratings are based on a 0-4 rating scale, with 0 representing minimal hazards or risks, and 4 representing significant hazards or risks Although HMIS® ratings are not required on MSDSs under 29 CFR 1910.1200, the preparer may choose to provide them. HMIS® ratings are to be used with a fully implemented HMIS® program. HMIS® is a registered mark of the National Paint & Coatings Association (NPCA). HMIS® materials may be purchased exclusively from J. J. Keller (800) 327-6868.

The customer is responsible for determining the PPE code for this material.

National Fire Protection Association (U.S.A.)

Health : 2 **Flammability** : 3 **Instability** : 0

Date of previous issue : **2/4/2011.**

Organization that prepared the MSDS : EHS

Indicates information that has changed from previously issued version.

Disclaimer

The information contained in this data sheet is based on present scientific and technical knowledge. The purpose of this information is to draw attention to the health and safety aspects concerning the products supplied by PPG, and to recommend precautionary measures for the storage and handling of the products. No warranty or guarantee is given in respect of the properties of the products. No liability can be accepted for any failure to observe the precautionary measures described in this data sheet or for any misuse of the products.

Powered by ATRION

Material Safety Data Sheet

Date of issue 9 May 2011
Version 18

1 . Product and company identification

Product name : PITT-GUARD DTR COMP A GRAY
Code : 97-148
Supplier : PPG Industries, Inc.
One PPG Place
Pittsburgh, PA 15272
Emergency telephone number : (412) 434-4515 (U.S.)
(514) 645-1320 (Canada)
01-800-00-21-400 (Mexico)
Technical Phone Number : (412) 492-5200 (ALLISON PARK, PA) 8:00 a.m. - 5:00 p.m. EST

2 . Hazards identification

Emergency overview : DANGER!

FLAMMABLE LIQUID AND VAPOR. CAUSES DIGESTIVE TRACT, EYE AND SKIN BURNS. HARMFUL IF ABSORBED THROUGH SKIN. CAUSES RESPIRATORY TRACT IRRITATION. MAY CAUSE ALLERGIC RESPIRATORY AND SKIN REACTION. MAY BE HARMFUL IF INHALED OR SWALLOWED. SANDING AND GRINDING DUSTS MAY BE HARMFUL IF INHALED. PROLONGED OR REPEATED CONTACT MAY DRY SKIN AND CAUSE IRRITATION. CONTAINS MATERIAL THAT CAN CAUSE TARGET ORGAN DAMAGE. CANCER HAZARD - CONTAINS MATERIAL WHICH CAN CAUSE CANCER.

Keep away from flames, such as a pilot light, and any object that sparks, such as an electric motor. Keep away from heat. Do not smoke. Do not breathe vapor or mist. Do not swallow. Do not ingest. Do not get in eyes or on skin or clothing. Use only with adequate ventilation. Keep container tightly closed and sealed until ready for use. Wash thoroughly after handling.

Potential acute health effects

Inhalation : May be harmful if inhaled. Irritating to respiratory system. Can irritate eyes, nose, mouth and throat. May cause sensitization by inhalation. Exposure to decomposition products may cause a health hazard. Serious effects may be delayed following exposure.
Ingestion : May be harmful if swallowed. Corrosive to the digestive tract. Causes burns.
Skin : Corrosive to the skin. Causes burns. Toxic in contact with skin. May cause an allergic skin reaction.
Eyes : Corrosive to eyes. Causes burns.

Over-exposure signs/symptoms

Repeated exposure to high vapor concentrations may cause irritation of the respiratory system and permanent brain and nervous system damage. Inhalation of vapor/aerosol concentrations above the recommended exposure limits causes headaches, drowsiness and nausea and may lead to unconsciousness or death. There is some evidence that repeated exposure to organic solvent vapors in combination with constant loud noise can cause greater hearing loss than expected from exposure to noise alone. **1-component preparations:** formaldehyde is released during curing. Formaldehyde may cause irreversible effects, is irritating to the mucous membranes and may cause skin sensitization. This product contains crystalline silica which can cause lung cancer or silicosis. The risk of cancer depends on the duration and level of exposure to dust from sanding surfaces or mist from spray applications.

Medical conditions aggravated by over-exposure : Pre-existing respiratory and skin disorders and disorders involving any other target organs mentioned in this MSDS as being at risk may be aggravated by over-exposure to this product.

This Material Safety Data Sheet has been prepared in accordance with Canada's Workplace Hazardous Materials Information System (WHMIS) and the OSHA Hazard Communication Standard (29 CFR 1910.1200).

See toxicological information (Section 11)

Powered by ATRION

3 . Composition/information on ingredients

Name	CAS number	%
Quartz (SiO2) (<10 microns)	14808-60-7	30 - 60
NJTS 80100337-5132	Proprietary	10 - 30
4-methylpentan-2-one	108-10-1	7 - 13
Silicate, mica	12001-26-2	3 - 7
Titanium dioxide	13463-67-7	1 - 5
Urea, polymer with formaldehyde, butylated	68002-19-7	1 - 5
TRIETHYLENETETRAMINE	112-24-3	1 - 5
butan-1-ol	71-36-3	1 - 5
xylene	1330-20-7	0.1 - 1
Carbon black	1333-86-4	0.1 - 1

There are no additional ingredients present which, within the current knowledge of the supplier and in the concentrations applicable, are classified as hazardous to health or the environment and hence require reporting in this section.

4 . First aid measures

If ingestion, irritation, any type of overexposure or symptoms of overexposure occur during or persists after use of this product, contact a POISON CONTROL CENTER, EMERGENCY ROOM OR PHYSICIAN immediately; have Material Safety Data Sheet information available. Never give anything by mouth to an unconscious or convulsing person.

Eye contact : Check for and remove any contact lenses. Immediately flush eyes with running water for at least 15 minutes, keeping eyelids open. Seek immediate medical attention.

Skin contact : Remove contaminated clothing and shoes. Wash skin thoroughly with soap and water or use recognized skin cleanser. Do NOT use solvents or thinners.

Inhalation : Remove to fresh air. Keep person warm and at rest. If not breathing, if breathing is irregular or if respiratory arrest occurs, provide artificial respiration or oxygen by trained personnel.

Ingestion : If swallowed, seek medical advice immediately and show this container or label. Keep person warm and at rest. Do not induce vomiting.

Notes to physician : In case of inhalation of decomposition products in a fire, symptoms may be delayed. The exposed person may need to be kept under medical surveillance for 48 hours.

5 . Fire-fighting measures

Flammability of the product : Flammable liquid. In a fire or if heated, a pressure increase will occur and the container may burst, with the risk of a subsequent explosion. Vapors may accumulate in low or confined areas or travel a considerable distance to a source of ignition and flash back. Runoff to sewer may create fire or explosion hazard.

Extinguishing media

Suitable : Use dry chemical, CO_2, water spray (fog) or foam.

Not suitable : Do not use water jet.

Special exposure hazards : Promptly isolate the scene by removing all persons from the vicinity of the incident if there is a fire. No action shall be taken involving any personal risk or without suitable training. Move containers from fire area if this can be done without risk. Use water spray to keep fire-exposed containers cool.

Hazardous combustion products : Decomposition products may include the following materials:
carbon oxides
nitrogen oxides
metal oxide/oxides
Formaldehyde.

Special protective equipment for fire-fighters : Fire-fighters should wear appropriate protective equipment and self-contained breathing apparatus (SCBA) with a full face-piece operated in positive pressure mode.

Powered by ATRION

6 . Accidental release measures

Personal precautions : No action shall be taken involving any personal risk or without suitable training. Evacuate surrounding areas. Keep unnecessary and unprotected personnel from entering. Do not touch or walk through spilled material. Shut off all ignition sources. No flares, smoking or flames in hazard area. Do not breathe vapor or mist. Provide adequate ventilation. Wear appropriate respirator when ventilation is inadequate. Put on appropriate personal protective equipment (see Section 8).

Environmental precautions : Avoid dispersal of spilled material and runoff and contact with soil, waterways, drains and sewers. Inform the relevant authorities if the product has caused environmental pollution (sewers, waterways, soil or air).

Large spill : Stop leak if without risk. Move containers from spill area. Approach release from upwind. Use spark-proof tools and explosion-proof equipment. Prevent entry into sewers, water courses, basements or confined areas. Wash spillages into an effluent treatment plant or proceed as follows. Contain and collect spillage with non-combustible, absorbent material e.g. sand, earth, vermiculite or diatomaceous earth and place in container for disposal according to local regulations (see section 13). Dispose of via a licensed waste disposal contractor. Contaminated absorbent material may pose the same hazard as the spilled product. Note: see section 1 for emergency contact information and section 13 for waste disposal.

Small spill : Stop leak if without risk. Move containers from spill area. Use spark-proof tools and explosion-proof equipment. Dilute with water and mop up if water-soluble or absorb with an inert dry material and place in an appropriate waste disposal container. Dispose of via a licensed waste disposal contractor.

7 . Handling and storage

Handling : Put on appropriate personal protective equipment (see Section 8). Eating, drinking and smoking should be prohibited in areas where this material is handled, stored and processed. Persons with a history of skin sensitization problems or asthma, allergies or chronic or recurrent respiratory disease should not be employed in any process in which this product is used. Do not breathe vapor or mist. Do not swallow. Do not get in eyes or on skin or clothing. Use only with adequate ventilation. Wear appropriate respirator when ventilation is inadequate. Do not enter storage areas and confined spaces unless adequately ventilated. Keep in the original container or an approved alternative made from a compatible material, kept tightly closed when not in use. Store and use away from heat, sparks, open flame or any other ignition source. Use explosion-proof electrical (ventilating, lighting and material handling) equipment. Use non-sparking tools. Take precautionary measures against electrostatic discharges. Vapors are heavier than air and may spread along floors. To avoid fire or explosion, dissipate static electricity during transfer by grounding and bonding containers and equipment before transferring material. Empty containers retain product residue and can be hazardous. Do not reuse container. If this material is part of a multiple component system, read the Material Safety Data Sheet(s) for the other component or components before blending as the resulting mixture may have the hazards of all of its parts.

Storage : Store in accordance with local regulations. Store in a segregated and approved area. Store in original container protected from direct sunlight in a dry, cool and well-ventilated area, away from incompatible materials (see section 10) and food and drink. Eliminate all ignition sources. Separate from oxidizing materials. Keep container tightly closed and sealed until ready for use. Containers that have been opened must be carefully resealed and kept upright to prevent leakage. Do not store in unlabeled containers. Use appropriate containment to avoid environmental contamination. Do not store above the following temperature: 120F / 49C.

8 . Exposure controls/personal protection

Name	Result	ACGIH	OSHA	Ontario	Mexico	PPG

Powered by ATRION

8 . Exposure controls/personal protection

Quartz (SiO2) (<10 microns)	TWA	0.025 mg/m³ R	10 mg/m³ R Z 30 mg/m³ TD Z 250 mppcf R Z	0.1 mg/m³ R	0.1 mg/m³ R	Not established
4-methylpentan-2-one	TWA	20 ppm	100 ppm	50 ppm	50 ppm	Not established
	STEL	75 ppm	Not established	75 ppm	75 ppm	Not established
Silicate, mica	TWA	3 mg/m³ R	20 mppcf Z	3 mg/m³ R	3 mg/m³	Not established
Titanium dioxide	TWA	10 mg/m³	15 mg/m³ TD	10 mg/m³ TD	10 mg/m³ (as Ti)	Not established
	STEL	Not established	Not established	Not established	20 mg/m³ (as Ti)	Not established
TRIETHYLENETETRAMINE	TWA	Not established	Not established	0.5 ppm S	Not established	1 ppm S
butan-1-ol	TWA	20 ppm	100 ppm	20 ppm	Not established	Not established
	STEL	Not established	Not established	Not established	50 ppm S C	Not established
xylene	TWA	100 ppm	100 ppm	100 ppm	100 ppm	Not established
	STEL	150 ppm	Not established	150 ppm	150 ppm	Not established
Carbon black	TWA	3.5 mg/m³	3.5 mg/m³	3.5 mg/m³	3.5 mg/m³	Not established
	STEL	Not established	Not established	Not established	7 mg/m³	Not established

Key to abbreviations

A = Acceptable Maximum Peak
ACGIH = American Conference of Governmental Industrial Hygienists.
C = Ceiling Limit
F = Fume
IPEL = Internal Permissible Exposure Limit
OSHA = Occupational Safety and Health Administration.
R = Respirable
Z = OSHA 29CFR 1910.1200 Subpart Z - Toxic and Hazardous Substances
S = Potential skin absorption
SR = Respiratory sensitization
SS = Skin sensitization
STEL = Short term Exposure limit values
TD = Total dust
TLV = Threshold Limit Value
TWA = Time Weighted Average

Consult local authorities for acceptable exposure limits.

Recommended monitoring procedures : If this product contains ingredients with exposure limits, personal, workplace atmosphere or biological monitoring may be required to determine the effectiveness of the ventilation or other control measures and/or the necessity to use respiratory protective equipment.

Engineering measures : Use only with adequate ventilation. Use process enclosures, local exhaust ventilation or other engineering controls to keep worker exposure to airborne contaminants below any recommended or statutory limits. The engineering controls also need to keep gas, vapor or dust concentrations below any lower explosive limits. Use explosion-proof ventilation equipment.

Powered by ATRION

8 . Exposure controls/personal protection

Hygiene measures : Wash hands, forearms and face thoroughly after handling chemical products, before eating, smoking and using the lavatory and at the end of the working period. Appropriate techniques should be used to remove potentially contaminated clothing. Contaminated work clothing should not be allowed out of the workplace. Wash contaminated clothing before reusing. Ensure that eyewash stations and safety showers are close to the workstation location.

Personal protection

Eyes : Chemical splash goggles and face shield.

Hands : Chemical-resistant, impervious gloves complying with an approved standard should be worn at all times when handling chemical products if a risk assessment indicates this is necessary.

Gloves : nitrile, neoprene

Respiratory : By spraying: air-fed respirator. By other operations than spraying, in well ventilated areas, air-fed respirators could be replaced by a combination charcoal filter and particulate filter mask. Respirator selection must be based on known or anticipated exposure levels, the hazards of the product and the safe working limits of the selected respirator.

Skin : Personal protective equipment for the body should be selected based on the task being performed and the risks involved and should be approved by a specialist before handling this product.

Environmental exposure controls : Emissions from ventilation or work process equipment should be checked to ensure they comply with the requirements of environmental protection legislation. In some cases, fume scrubbers, filters or engineering modifications to the process equipment will be necessary to reduce emissions to acceptable levels.

9 . Physical and chemical properties

Physical state : Liquid.

Flash point : Closed cup: 35°C (95°F)

Explosion limits : Lower: 1.2%

Material supports combustion. : Yes.

Color : Not available.

Odor : Not available.

pH : Not available.

Boiling/condensation point : >37.78°C (>100°F)

Melting/freezing point : Not available.

Specific gravity : 1.5

Density (lbs / gal) : 12.52

Vapor pressure : 1.9 kPa (14 mm Hg) [20°C]

Vapor density : Not available.

Volatility : 24% (v/v), 13.12% (w/w)

Evaporation rate : 148 (butyl acetate = 1)

Partition coefficient: n-octanol/water : Not available.

% Solid. (w/w) : 86.88

10 . Stability and reactivity

Stability : Stable under recommended storage and handling conditions (see section 7).

Conditions to avoid : Avoid all possible sources of ignition (spark or flame). Do not pressurize, cut, weld, braze, solder, drill, grind or expose containers to heat or sources of ignition.

Materials to avoid : Reactive or incompatible with the following materials:,water,acids,oxidizing materials,strong alkalis

Hazardous decomposition products : Formaldehyde.

Powered by ATRION

10 . Stability and reactivity

Hazardous polymerization : Under normal conditions of storage and use, hazardous polymerization will not occur.

11 . Toxicological information

Acute toxicity

Product/ingredient name	Result	Species	Dose	Exposure
4-methylpentan-2-one	LD50 Oral	Rat	2.08 g/kg	-
	LC50 Inhalation Vapor	Rat	32772 mg/m3	4 hours
Titanium dioxide	LD50 Oral	Rat	>10 g/kg	-
TRIETHYLENETETRAMINE	LD50 Oral	Rat	2500 mg/kg	-
	LD50 Dermal	Rabbit	805 mg/kg	-
butan-1-ol	LD50 Oral	Rat	0.79 g/kg	-
	LD50 Dermal	Rabbit	3400 mg/kg	-
	LC50 Inhalation Vapor	Rat	8000 ppm	4 hours
xylene	LD50 Oral	Rat	4.3 g/kg	-
	LD50 Dermal	Rabbit	>1.7 g/kg	-
	LC50 Inhalation Vapor	Rat	5000 ppm	4 hours
Carbon black	LD50 Oral	Rat	>15400 mg/kg	-
	LD50 Dermal	Rabbit	>3 g/kg	-

Conclusion/Summary : Not available.

Chronic toxicity

Conclusion/Summary : Not available.

Defatting irritant : Prolonged or repeated contact can defat the skin and lead to irritation, cracking and/or dermatitis.

Target organs : Contains material which causes damage to the following organs: kidneys, liver, spleen, brain, bone marrow, ears.
Contains material which may cause damage to the following organs: blood, lungs, mucous membranes, upper respiratory tract, skin, central nervous system (CNS), eye, lens or cornea.

Carcinogenicity

Carcinogenicity : Contains material which can cause cancer. Risk of cancer depends on duration and level of exposure.

Classification

Product/ingredient name	ACGIH	IARC	EPA	NIOSH	NTP	OSHA
Quartz (SiO2) (<10 microns)	A2	1	-	+	Proven.	-
4-methylpentan-2-one	A3	-	-	-	-	-
Titanium dioxide	A4	2B	-	-	-	-
Carbon black	A4	2B	-	+	-	-

12 . Ecological information

Environmental effects : No known significant effects or critical hazards.

Aquatic ecotoxicity

Product/ingredient name	Result	Species	Exposure
4-methylpentan-2-one	Acute LC50 505000 to 514000 ug/L Fresh water	Fish - Fathead minnow - Pimephales promelas	96 hours
Titanium dioxide	Acute EC50 >1000000 ug/L Fresh water	Daphnia - Water flea - Daphnia magna	48 hours
TRIETHYLENETETRAMINE	Acute LC50 33900 ug/L Fresh water	Daphnia - Water flea - Daphnia magna	48 hours
butan-1-ol	Acute LC50 100 to 500 mg/L Fresh	Fish - Bluegill - Lepomis macrochirus	96 hours

Powered by ATRION

12 . Ecological information

	water		
	Acute EC50 1983000 to 2072000 ug/L Fresh water	Daphnia - Water flea - Daphnia magna	48 hours
xylene	Acute LC50 3300 to 4093 ug/L Fresh water	Fish - Rainbow trout,donaldson trout - Oncorhynchus mykiss	96 hours

13 . Disposal considerations

Waste disposal : The generation of waste should be avoided or minimized wherever possible. Significant quantities of waste product residues should not be disposed of via the foul sewer but processed in a suitable effluent treatment plant. Dispose of surplus and non-recyclable products via a licensed waste disposal contractor. Disposal of this product, solutions and any by-products should at all times comply with the requirements of environmental protection and waste disposal legislation and any regional local authority requirements. Waste packaging should be recycled. Incineration or landfill should only be considered when recycling is not feasible. This material and its container must be disposed of in a safe way. Care should be taken when handling emptied containers that have not been cleaned or rinsed out. Empty containers or liners may retain some product residues. Vapor from product residues may create a highly flammable or explosive atmosphere inside the container. Do not cut, weld or grind used containers unless they have been cleaned thoroughly internally. Avoid dispersal of spilled material and runoff and contact with soil, waterways, drains and sewers.

Disposal should be in accordance with applicable regional, national and local laws and regulations.

Refer to Section 7: HANDLING AND STORAGE and Section 8: EXPOSURE CONTROLS/PERSONAL PROTECTION for additional handling information and protection of employees. Section 6. Accidental release measures

14 . Transport information

Regulation	UN number	Proper shipping name	Classes	PG*	Additional information
UN	1263	PAINT	3	III	-
IMDG	1263	PAINT	3	III	-
DOT	1263	PAINT	3	III	-

PG* : Packing group

Reportable quantity RQ : CERCLA: Hazardous substances.: xylene: 100 lbs. (45.4 kg); 4-methylpentan-2-one: 5000 lbs. (2270 kg); butan-1-ol: 5000 lbs. (2270 kg);

15 . Regulatory information

United States inventory (TSCA 8b) : All components are listed or exempted.
Australia inventory (AICS) : All components are listed or exempted.
Canada inventory (DSL) : All components are listed or exempted.
China inventory (IECSC) : All components are listed or exempted.
Europe inventory (REACH) : Please contact your supplier for information on the inventory status of this material.
Japan inventory (ENCS) : All components are listed or exempted.
Korea inventory (KECI) : All components are listed or exempted.
New Zealand (NZIoC) : Substance Use Restricted
Philippines inventory (PICCS) : At least one component is not listed.

United States

U.S. Federal regulations :

SARA 302/304/311/312 extremely hazardous substances: No products were found.
SARA 302/304 emergency planning and notification: No products were found.

Powered by ATRION

15 . Regulatory information

SARA 302/304/311/312 hazardous chemicals: Quartz (SiO2) (<10 microns); Silicate, mica; TRIETHYLENETETRAMINE; Titanium dioxide; 4-methylpentan-2-one; butan-1-ol
CERCLA: Hazardous substances.: xylene: 100 lbs. (45.4 kg); 4-methylpentan-2-one: 5000 lbs. (2270 kg); butan-1-ol: 5000 lbs. (2270 kg);

SARA 311/312 MSDS Distribution - Chemical Inventory - Hazard Identification:

Chemical name	CAS #	Acute	Chronic	Fire	Reactive	Pressure
Quartz (SiO2) (<10 microns)	**14808-60-7**	N	Y	N	N	N
NJTS 80100337-5132	**Proprietary**	Y	N	N	N	N
4-methylpentan-2-one	**108-10-1**	Y	N	Y	N	N
Silicate, mica	**12001-26-2**	N	N	N	N	N
Titanium dioxide	**13463-67-7**	N	Y	N	N	N
Urea, polymer with formaldehyde, butylated	**68002-19-7**	Y	N	N	Y	N
TRIETHYLENETETRAMINE	**112-24-3**	Y	N	N	N	N
butan-1-ol	**71-36-3**	Y	N	Y	N	N
Carbon black	**1333-86-4**	N	Y	N	N	N
	Product as-supplied :	Y	Y	Y	N	N

SARA 313
Supplier notification :

Chemical name	CAS number	Concentration
4-methylpentan-2-one	108-10-1	7 - 13
butan-1-ol	71-36-3	1 - 5

Additional environmental information is contained on the Environmental Data Sheet for this product, which can be obtained from your PPG representative.

California Prop. 65

WARNING: This product contains a chemical known to the State of California to cause cancer.

Canada

WHMIS (Canada) : Class B-2: Flammable liquid with a flash point lower than 37.8°C (100°F). Class E: Corrosive liquid. Class D-1B: Material causing immediate and serious toxic effects (Toxic). Class D-2A: Material causing other toxic effects (Very toxic). Class D-2B: Material causing other toxic effects (Toxic).

Mexico

Classification

Flammability : 3 **Health** : 3 **Reactivity** : 0

16 . Other information

Hazardous Material Information System (U.S.A.)

Health : 3 * **Flammability** : 3 **Physical hazards** : 0
(*) - Chronic effects

Caution: HMIS® ratings are based on a 0-4 rating scale, with 0 representing minimal hazards or risks, and 4 representing significant hazards or risks Although HMIS® ratings are not required on MSDSs under 29 CFR 1910.1200, the preparer may choose to provide them. HMIS® ratings are to be used with a fully implemented HMIS® program. HMIS® is a registered mark of the National Paint & Coatings Association (NPCA). HMIS® materials may be purchased exclusively from J. J. Keller (800) 327-6868.

The customer is responsible for determining the PPE code for this material.

National Fire Protection Association (U.S.A.)

Health : 3 **Flammability** : 3 **Instability** : 0

Date of previous issue : **11/20/2010.**

Organization that prepared the MSDS : EHS

Indicates information that has changed from previously issued version.

Disclaimer

Powered by ATRION

16 . Other information

The information contained in this data sheet is based on present scientific and technical knowledge. The purpose of this information is to draw attention to the health and safety aspects concerning the products supplied by PPG, and to recommend precautionary measures for the storage and handling of the products. No warranty or guarantee is given in respect of the properties of the products. No liability can be accepted for any failure to observe the precautionary measures described in this data sheet or for any misuse of the products.

Powered by ATRION

Material Safety Data Sheet

Date of issue 22 November 2010
Version 13.01

1 . Product and company identification

Product name : PITT-GUARD DTR COMP B

Code : 97-149

Supplier : PPG Industries, Inc.
One PPG Place
Pittsburgh, PA 15272

Emergency telephone number : (412) 434-4515 (U.S.)
(514) 645-1320 (Canada)
01-800-00-21-400 (Mexico)

Technical Phone Number : (412) 492-5200 (ALLISON PARK, PA) 8:00 a.m. - 5:00 p.m. EST

2 . Hazards identification

Emergency overview : WARNING!

COMBUSTIBLE LIQUID AND VAPOR. HARMFUL IF INHALED. CAUSES RESPIRATORY TRACT, EYE AND SKIN IRRITATION. MAY CAUSE ALLERGIC SKIN REACTION. MAY BE HARMFUL IF SWALLOWED. SANDING AND GRINDING DUSTS MAY BE HARMFUL IF INHALED. CONTAINS MATERIAL THAT CAN CAUSE TARGET ORGAN DAMAGE. CANCER HAZARD - CONTAINS MATERIAL WHICH CAN CAUSE CANCER.

Keep away from heat, sparks and flame. Do not breathe vapor or mist. Do not swallow. Do not get on skin or clothing. Avoid contact with eyes. Use only with adequate ventilation. Keep container tightly closed and sealed until ready for use. Wash thoroughly after handling.

Potential acute health effects

Inhalation : Harmful if inhaled. Severely irritating to the respiratory system. Can irritate eyes, nose, mouth and throat. Exposure to decomposition products may cause a health hazard. Serious effects may be delayed following exposure.

Ingestion : May be harmful if swallowed.

Skin : Irritating to skin. May cause an allergic skin reaction.

Eyes : Irritating to eyes.

Over-exposure signs/symptoms

Repeated exposure to high vapor concentrations may cause irritation of the respiratory system and permanent brain and nervous system damage. Inhalation of vapor/aerosol concentrations above the recommended exposure limits causes headaches, drowsiness and nausea and may lead to unconsciousness or death. There is some evidence that repeated exposure to organic solvent vapors in combination with constant loud noise can cause greater hearing loss than expected from exposure to noise alone. This product contains crystalline silica which can cause lung cancer or silicosis. The risk of cancer depends on the duration and level of exposure to dust from sanding surfaces or mist from spray applications.

Medical conditions aggravated by over-exposure : Pre-existing skin disorders and disorders involving any other target organs mentioned in this MSDS as being at risk may be aggravated by over-exposure to this product.

This Material Safety Data Sheet has been prepared in accordance with Canada's Workplace Hazardous Materials Information System (WHMIS) and the OSHA Hazard Communication Standard (29 CFR 1910.1200).

See toxicological information (Section 11)

Powered by ATRION

3 . Composition/information on ingredients

Name	CAS number	%
Epoxy Resin (MW<=700)	25068-38-6	40 - 70
Quartz (SiO2) (<10 microns)	14808-60-7	15 - 40
Nitroethane	79-24-3	1 - 5
xylene	1330-20-7	0.1 - 1
Ethylbenzene	100-41-4	0.1 - 1

There are no additional ingredients present which, within the current knowledge of the supplier and in the concentrations applicable, are classified as hazardous to health or the environment and hence require reporting in this section.

4 . First aid measures

If ingestion, irritation, any type of overexposure or symptoms of overexposure occur during or persists after use of this product, contact a POISON CONTROL CENTER, EMERGENCY ROOM OR PHYSICIAN immediately; have Material Safety Data Sheet information available. Never give anything by mouth to an unconscious or convulsing person.

Eye contact : Check for and remove any contact lenses. Immediately flush eyes with running water for at least 15 minutes, keeping eyelids open. Seek immediate medical attention.

Skin contact : Remove contaminated clothing and shoes. Wash skin thoroughly with soap and water or use recognized skin cleanser. Do NOT use solvents or thinners.

Inhalation : Remove to fresh air. Keep person warm and at rest. If not breathing, if breathing is irregular or if respiratory arrest occurs, provide artificial respiration or oxygen by trained personnel.

Ingestion : If swallowed, seek medical advice immediately and show this container or label. Keep person warm and at rest. Do not induce vomiting.

Notes to physician : In case of inhalation of decomposition products in a fire, symptoms may be delayed. The exposed person may need to be kept under medical surveillance for 48 hours.

5 . Fire-fighting measures

Flammability of the product : Combustible liquid. In a fire or if heated, a pressure increase will occur and the container may burst, with the risk of a subsequent explosion. Vapors may accumulate in low or confined areas or travel a considerable distance to a source of ignition and flash back.

Extinguishing media

Suitable : Use dry chemical, CO_2, water spray (fog) or foam.

Not suitable : Do not use water jet.

Special exposure hazards : Promptly isolate the scene by removing all persons from the vicinity of the incident if there is a fire. No action shall be taken involving any personal risk or without suitable training. Move containers from fire area if this can be done without risk. Use water spray to keep fire-exposed containers cool. Fire water contaminated with this material must be contained and prevented from being discharged to any waterway, sewer or drain.

Hazardous combustion products : Decomposition products may include the following materials:
carbon oxides
nitrogen oxides
halogenated compounds
metal oxide/oxides

Special protective equipment for fire-fighters : Fire-fighters should wear appropriate protective equipment and self-contained breathing apparatus (SCBA) with a full face-piece operated in positive pressure mode.

Powered by ATRION

6 . Accidental release measures

Personal precautions : No action shall be taken involving any personal risk or without suitable training. Evacuate surrounding areas. Keep unnecessary and unprotected personnel from entering. Do not touch or walk through spilled material. Shut off all ignition sources. No flares, smoking or flames in hazard area. Avoid breathing vapor or mist. Provide adequate ventilation. Wear appropriate respirator when ventilation is inadequate. Put on appropriate personal protective equipment (see Section 8).

Environmental precautions : Avoid dispersal of spilled material and runoff and contact with soil, waterways, drains and sewers. Inform the relevant authorities if the product has caused environmental pollution (sewers, waterways, soil or air). Water polluting material. May be harmful to the environment if released in large quantities.

Large spill : Stop leak if without risk. Move containers from spill area. Approach release from upwind. Use spark-proof tools and explosion-proof equipment. Prevent entry into sewers, water courses, basements or confined areas. Wash spillages into an effluent treatment plant or proceed as follows. Contain and collect spillage with non-combustible, absorbent material e.g. sand, earth, vermiculite or diatomaceous earth and place in container for disposal according to local regulations (see section 13). Dispose of via a licensed waste disposal contractor. Contaminated absorbent material may pose the same hazard as the spilled product. Note: see section 1 for emergency contact information and section 13 for waste disposal.

Small spill : Stop leak if without risk. Move containers from spill area. Use spark-proof tools and explosion-proof equipment. Dilute with water and mop up if water-soluble or absorb with an inert dry material and place in an appropriate waste disposal container. Dispose of via a licensed waste disposal contractor.

7 . Handling and storage

Handling : Put on appropriate personal protective equipment (see Section 8). Eating, drinking and smoking should be prohibited in areas where this material is handled, stored and processed. Persons with a history of skin sensitization problems should not be employed in any process in which this product is used. Do not breathe vapor or mist. Do not swallow. Do not get in eyes or on skin or clothing. Avoid release to the environment. Use only with adequate ventilation. Wear appropriate respirator when ventilation is inadequate. Do not enter storage areas and confined spaces unless adequately ventilated. Keep in the original container or an approved alternative made from a compatible material, kept tightly closed when not in use. Store and use away from heat, sparks, open flame or any other ignition source. Use explosion-proof electrical (ventilating, lighting and material handling) equipment. Use non-sparking tools. Take precautionary measures against electrostatic discharges. Vapors are heavier than air and may spread along floors. To avoid fire or explosion, dissipate static electricity during transfer by grounding and bonding containers and equipment before transferring material. Empty containers retain product residue and can be hazardous. Do not reuse container. If this material is part of a multiple component system, read the Material Safety Data Sheet(s) for the other component or components before blending as the resulting mixture may have the hazards of all of its parts.

Storage : Store in accordance with local regulations. Store in a segregated and approved area. Store in original container protected from direct sunlight in a dry, cool and well-ventilated area, away from incompatible materials (see section 10) and food and drink. Eliminate all ignition sources. Separate from oxidizing materials. Keep container tightly closed and sealed until ready for use. Containers that have been opened must be carefully resealed and kept upright to prevent leakage. Do not store in unlabeled containers. Use appropriate containment to avoid environmental contamination. Do not store above the following temperature: 120F / 49C.

Powered by ATRION

8 . Exposure controls/personal protection

Name	Result	ACGIH	OSHA	Ontario	Mexico	PPG
Quartz (SiO2) (<10 microns)	TWA	0.025 mg/m³ R	10 mg/m³ R Z 30 mg/m³ TD Z 250 mppcf R Z	0.1 mg/m³ R	0.1 mg/m³ R	Not established
Nitroethane	TWA	100 ppm	100 ppm	100 ppm	100 ppm	Not established
	STEL	Not established	Not established	Not established	150 ppm	Not established
xylene	TWA	100 ppm	100 ppm	100 ppm	100 ppm	Not established
	STEL	150 ppm	Not established	150 ppm	150 ppm	Not established
Ethylbenzene	TWA	100 ppm	100 ppm	100 ppm	100 ppm	Not established
	STEL	125 ppm	Not established	125 ppm	125 ppm	Not established

Key to abbreviations

A = Acceptable Maximum Peak
ACGIH = American Conference of Governmental Industrial Hygienists.
C = Ceiling Limit
F = Fume
IPEL = Internal Permissible Exposure Limit
OSHA = Occupational Safety and Health Administration.
R = Respirable
Z = OSHA 29CFR 1910.1200 Subpart Z - Toxic and Hazardous Substances
S = Potential skin absorption
SR = Respiratory sensitization
SS = Skin sensitization
STEL = Short term Exposure limit values
TD = Total dust
TLV = Threshold Limit Value
TWA = Time Weighted Average

Consult local authorities for acceptable exposure limits.

Recommended monitoring procedures : If this product contains ingredients with exposure limits, personal, workplace atmosphere or biological monitoring may be required to determine the effectiveness of the ventilation or other control measures and/or the necessity to use respiratory protective equipment.

Engineering measures : Use only with adequate ventilation. Use process enclosures, local exhaust ventilation or other engineering controls to keep worker exposure to airborne contaminants below any recommended or statutory limits. The engineering controls also need to keep gas, vapor or dust concentrations below any lower explosive limits. Use explosion-proof ventilation equipment.

Hygiene measures : Wash hands, forearms and face thoroughly after handling chemical products, before eating, smoking and using the lavatory and at the end of the working period. Appropriate techniques should be used to remove potentially contaminated clothing. Contaminated work clothing should not be allowed out of the workplace. Wash contaminated clothing before reusing. Ensure that eyewash stations and safety showers are close to the workstation location.

Personal protection

Eyes : Safety glasses with side shields.

Hands : Chemical-resistant, impervious gloves complying with an approved standard should be worn at all times when handling chemical products if a risk assessment indicates this is necessary.

Gloves : butyl rubber

Respiratory : If workers are exposed to concentrations above the exposure limit, they must use appropriate, certified respirators. Use a properly fitted, air-purifying or air-fed respirator complying with an approved standard if a risk assessment indicates this is necessary. Respirator selection must be based on known or anticipated exposure levels, the hazards of the product and the safe working limits of the selected respirator.

Powered by ATRION

8 . Exposure controls/personal protection

Skin : Personal protective equipment for the body should be selected based on the task being performed and the risks involved and should be approved by a specialist before handling this product.

Environmental exposure controls : Emissions from ventilation or work process equipment should be checked to ensure they comply with the requirements of environmental protection legislation. In some cases, fume scrubbers, filters or engineering modifications to the process equipment will be necessary to reduce emissions to acceptable levels.

9 . Physical and chemical properties

Physical state : Liquid.
Flash point : Closed cup: 73.33°C (164°F)
Explosion limits : Lower: 3.3%
Color : Not available.
Odor : Not available.
pH : Not available.
Boiling/condensation point : >37.78°C (>100°F)
Melting/freezing point : Not available.
Specific gravity : 1.39
Density (lbs / gal) : 11.6
Vapor pressure : 1.9 kPa (14.2 mm Hg) [20°C]
Vapor density : Not available.
Volatility : 6% (v/v), 4.08% (w/w)
Odor threshold : Not available.
Evaporation rate : 11 (butyl acetate = 1)
Partition coefficient: n-octanol/water : Not available.
% Solid. (w/w) : 95.92

10 . Stability and reactivity

Stability : Stable under recommended storage and handling conditions (see section 7).
Conditions to avoid : Avoid all possible sources of ignition (spark or flame). Do not pressurize, cut, weld, braze, solder, drill, grind or expose containers to heat or sources of ignition.
Materials to avoid : Reactive or incompatible with the following materials:,acids,oxidizing materials,strong alkalis
Hazardous decomposition products : Under normal conditions of storage and use, hazardous decomposition products should not be produced.
Hazardous polymerization : Under normal conditions of storage and use, hazardous polymerization will not occur.

11 . Toxicological information

Acute toxicity

Product/ingredient name	Result	Species	Dose	Exposure
Epoxy Resin (MW<=700)	LD50 Oral	Rat	>2 g/kg	-
	LD50 Dermal	Rabbit	>2 g/kg	-
Nitroethane	LD50 Oral	Rat	1.1 g/kg	-
xylene	LD50 Oral	Rat	4.3 g/kg	-
	LD50 Dermal	Rabbit	>1.7 g/kg	-
	LC50 Inhalation Vapor	Rat	5000 ppm	4 hours
Ethylbenzene	LD50 Oral	Rat	3.5 g/kg	-
	LD50 Dermal	Rabbit	>5000 mg/kg	-

Powered by ATRION

11 . Toxicological information

LC50 Inhalation Vapor	Rat	4000 ppm	4 hours

Chronic toxicity

Conclusion/Summary : Not available.

Target organs : Contains material which causes damage to the following organs: blood, kidneys, liver, spleen, brain, bone marrow.
Contains material which may cause damage to the following organs: lungs, mucous membranes, upper respiratory tract, skin, eyes, central nervous system (CNS).

Carcinogenicity

Carcinogenicity : Contains material which can cause cancer. Risk of cancer depends on duration and level of exposure.

Classification

Product/ingredient name	ACGIH	IARC	EPA	NIOSH	NTP	OSHA
Quartz (SiO2) (<10 microns)	A2	1	-	+	Proven.	-
Ethylbenzene	A3	2B	-	-	-	-

Mutagenicity

Mutagenicity : No known significant effects or critical hazards.

Teratogenicity

Teratogenicity : No known significant effects or critical hazards.

Reproductive toxicity

Developmental effects : No known significant effects or critical hazards.

Fertility effects : No known significant effects or critical hazards.

12 . Ecological information

Environmental effects : Water polluting material. May be harmful to the environment if released in large quantities.

Aquatic ecotoxicity

Product/ingredient name	Result	Species	Exposure
xylene	Acute LC50 3300 to 4093 ug/L Fresh water	Fish - Rainbow trout,donaldson trout - Oncorhynchus mykiss	96 hours
Ethylbenzene	Acute LC50 4200 ug/L Fresh water	Fish - Rainbow trout,donaldson trout - Oncorhynchus mykiss	96 hours
	Acute LC50 5100 to 5700 ug/L Marine water	Fish - Atlantic silverside - Menidia menidia	96 hours
	Acute EC50 2930 to 4400 ug/L Fresh water	Daphnia - Water flea - Daphnia magna	48 hours
	Chronic NOEC 3300 ug/L Marine water	Fish - Atlantic silverside - Menidia menidia	96 hours
	Chronic NOEC 6800 ug/L Fresh water	Daphnia - Water flea - Daphnia magna	48 hours

Other adverse effects : No known significant effects or critical hazards.

Powered by ATRION

13 . Disposal considerations

Waste disposal : The generation of waste should be avoided or minimized wherever possible. Significant quantities of waste product residues should not be disposed of via the foul sewer but processed in a suitable effluent treatment plant. Dispose of surplus and non-recyclable products via a licensed waste disposal contractor. Disposal of this product, solutions and any by-products should at all times comply with the requirements of environmental protection and waste disposal legislation and any regional local authority requirements. Waste packaging should be recycled. Incineration or landfill should only be considered when recycling is not feasible. This material and its container must be disposed of in a safe way. Care should be taken when handling emptied containers that have not been cleaned or rinsed out. Empty containers or liners may retain some product residues. Vapor from product residues may create a highly flammable or explosive atmosphere inside the container. Do not cut, weld or grind used containers unless they have been cleaned thoroughly internally. Avoid dispersal of spilled material and runoff and contact with soil, waterways, drains and sewers.

Disposal should be in accordance with applicable regional, national and local laws and regulations.

Refer to Section 7: HANDLING AND STORAGE and Section 8: EXPOSURE CONTROLS/PERSONAL PROTECTION for additional handling information and protection of employees. Section 6. Accidental release measures

14 . Transport information

Regulation	UN number	Proper shipping name	Classes	PG*	Additional information
UN	3082	ENVIRONMENTALLY HAZARDOUS SUBSTANCE, LIQUID, N.O.S.	9	III	-
IMDG	3082	ENVIRONMENTALLY HAZARDOUS SUBSTANCE, LIQUID, N.O.S.. Marine pollutant (Epoxy Resin (MW<=700))	9	III	-
DOT	1263	PAINT	Combustible liquid.	III	**Remarks** USA Only: Bulk Shipments (Greater than 450 Liters) are regulated by DOT for transport as Combustible Liquids.

PG* : Packing group

Reportable quantity RQ : CERCLA: Hazardous substances.: Ethylbenzene: 1000 lbs. (454 kg); xylene: 100 lbs. (45.4 kg);

15 . Regulatory information

United States inventory (TSCA 8b) : All components are listed or exempted.
Australia inventory (AICS) : All components are listed or exempted.
Canada inventory (DSL) : All components are listed or exempted.
China inventory (IECSC) : All components are listed or exempted.
Europe inventory (REACH) : Please contact your supplier for information on the inventory status of this material.
Japan inventory (ENCS) : All components are listed or exempted.
Korea inventory (KECI) : All components are listed or exempted.
New Zealand (NZIoC) : Not determined.

Philippines inventory (PICCS) : All components are listed or exempted.

United States

U.S. Federal regulations :

SARA 302/304/311/312 extremely hazardous substances: No products were found.
SARA 302/304 emergency planning and notification: No products were found.
SARA 302/304/311/312 hazardous chemicals: Quartz (SiO2) (<10 microns); Nitroethane
CERCLA: Hazardous substances.: Ethylbenzene: 1000 lbs. (454 kg); xylene: 100 lbs. (45.4 kg);

SARA 311/312 MSDS Distribution - Chemical Inventory - Hazard Identification:

Powered by ATRION

15 . Regulatory information

Chemical name	CAS #	Acute	Chronic	Fire	Reactive	Pressure
Epoxy Resin (MW<=700)	25068-38-6	Y	N	N	N	N
Quartz (SiO2) (<10 microns)	14808-60-7	N	Y	N	N	N
Nitroethane	79-24-3	Y	N	Y	Y	N
Ethylbenzene	100-41-4	Y	Y	Y	N	N
	Product as-supplied :	Y	Y	Y	N	N

SARA 313	Chemical name	CAS number	Concentration
Supplier notification :	Ethylbenzene	100-41-4	0.1 - 1

Additional environmental information is contained on the Environmental Data Sheet for this product, which can be obtained from your PPG representative.

California Prop. 65

WARNING: This product contains a chemical known to the State of California to cause cancer.

Canada

WHMIS (Canada) : Class B-3: Combustible liquid with a flash point between 37.8°C (100°F) and 93.3°C (200°F). Class D-1B: Material causing immediate and serious toxic effects (Toxic). Class D-2A: Material causing other toxic effects (Very toxic). Class D-2B: Material causing other toxic effects (Toxic).

Mexico

Classification

Flammability : 2 **Health** : 3 **Reactivity** : 0

16 . Other information

Hazardous Material Information System (U.S.A.)

Health : 3 * **Flammability** : 2 **Physical hazards** : 0

(*) - Chronic effects

Caution: HMIS® ratings are based on a 0-4 rating scale, with 0 representing minimal hazards or risks, and 4 representing significant hazards or risks Although HMIS® ratings are not required on MSDSs under 29 CFR 1910.1200, the preparer may choose to provide them. HMIS® ratings are to be used with a fully implemented HMIS® program. HMIS® is a registered mark of the National Paint & Coatings Association (NPCA). HMIS® materials may be purchased exclusively from J. J. Keller (800) 327-6868.

The customer is responsible for determining the PPE code for this material.

National Fire Protection Association (U.S.A.)

Health : 3 **Flammability** : 2 **Instability** : 0

Date of previous issue : **11/20/2010.**

Organization that prepared the MSDS : EHS

Indicates information that has changed from previously issued version.

Disclaimer

The information contained in this data sheet is based on present scientific and technical knowledge. The purpose of this information is to draw attention to the health and safety aspects concerning the products supplied by PPG, and to recommend precautionary measures for the storage and handling of the products. No warranty or guarantee is given in respect of the properties of the products. No liability can be accepted for any failure to observe the precautionary measures described in this data sheet or for any misuse of the products.

Powered by ATRION

Material Safety Data Sheet

Date of issue 29 January 2011
Version 13

1 . Product and company identification

Product name : AQUAPON WB PASTEL BASE

Code : 98-51

Supplier : PPG Industries, Inc.
One PPG Place
Pittsburgh, PA 15272

Emergency telephone number : (412) 434-4515 (U.S.)
(514) 645-1320 (Canada)
01-800-00-21-400 (Mexico)

Technical Phone Number : (412) 492-5200 (ALLISON PARK, PA) 8:00 a.m. - 5:00 p.m. EST

2 . Hazards identification

Emergency overview : DANGER!

FLAMMABLE LIQUID AND VAPOR. HARMFUL OR FATAL IF SWALLOWED. HARMFUL IF ABSORBED THROUGH SKIN. CAUSES RESPIRATORY TRACT, EYE AND SKIN IRRITATION. MAY CAUSE ALLERGIC RESPIRATORY AND SKIN REACTION. MAY BE HARMFUL IF INHALED. SANDING AND GRINDING DUSTS MAY BE HARMFUL IF INHALED. ASPIRATION HAZARD. CAN ENTER LUNGS AND CAUSE DAMAGE. PROLONGED OR REPEATED CONTACT MAY DRY SKIN AND CAUSE IRRITATION. CONTAINS MATERIAL THAT CAN CAUSE TARGET ORGAN DAMAGE.

Keep away from flames, such as a pilot light, and any object that sparks, such as an electric motor. Keep away from heat. Do not smoke. Do not breathe vapor or mist. Do not swallow. Do not get in eyes or on skin or clothing. Use only with adequate ventilation. Keep container tightly closed and sealed until ready for use. Wash thoroughly after handling.

Potential acute health effects

Inhalation : May be harmful if inhaled. Irritating to respiratory system. Can irritate eyes, nose, mouth and throat. May cause sensitization by inhalation.

Ingestion : Harmful or fatal if swallowed. Aspiration hazard if swallowed. Can enter lungs and cause damage.

Skin : Toxic in contact with skin. Severely irritating to the skin. May cause an allergic skin reaction.

Eyes : Severely irritating to eyes. Risk of serious damage to eyes.

Over-exposure signs/symptoms

Repeated exposure to high vapor concentrations may cause irritation of the respiratory system and permanent brain and nervous system damage. Inhalation of vapor/aerosol concentrations above the recommended exposure limits causes headaches, drowsiness and nausea and may lead to unconsciousness or death. There is some evidence that repeated exposure to organic solvent vapors in combination with constant loud noise can cause greater hearing loss than expected from exposure to noise alone.

Medical conditions aggravated by over-exposure : Pre-existing respiratory and skin disorders and disorders involving any other target organs mentioned in this MSDS as being at risk may be aggravated by over-exposure to this product.

This Material Safety Data Sheet has been prepared in accordance with Canada's Workplace Hazardous Materials Information System (WHMIS) and the OSHA Hazard Communication Standard (29 CFR 1910.1200).

See toxicological information (Section 11)

Powered by ATRION

3 . Composition/information on ingredients

Name	CAS number	%
Titanium dioxide	13463-67-7	15 - 40
AMINE FUNCTIONAL POLYAMIDE EPOXY ADDUCT	68424-41-9	5 - 10
POLYAMIDOAMINE EPOXY ADDUCT	68155-17-9	5 - 10
Ethylene glycol monobutyl ether	111-76-2	5 - 10
2-(propyloxy)ethanol	2807-30-9	1 - 5
Toluene	108-88-3	1 - 5
Silicon dioxide	7631-86-9	1 - 5
aluminium hydroxide	21645-51-2	0.5 - 1.5
Palygorskite	12174-11-7	0.1 - 1

There are no additional ingredients present which, within the current knowledge of the supplier and in the concentrations applicable, are classified as hazardous to health or the environment and hence require reporting in this section.

4 . First aid measures

If ingestion, irritation, any type of overexposure or symptoms of overexposure occur during or persists after use of this product, contact a POISON CONTROL CENTER, EMERGENCY ROOM OR PHYSICIAN immediately; have Material Safety Data Sheet information available. Never give anything by mouth to an unconscious or convulsing person.

Eye contact : Check for and remove any contact lenses. Immediately flush eyes with running water for at least 15 minutes, keeping eyelids open. Seek immediate medical attention.

Skin contact : Remove contaminated clothing and shoes. Wash skin thoroughly with soap and water or use recognized skin cleanser. Do NOT use solvents or thinners.

Inhalation : Remove to fresh air. Keep person warm and at rest. If not breathing, if breathing is irregular or if respiratory arrest occurs, provide artificial respiration or oxygen by trained personnel.

Ingestion : If swallowed, seek medical advice immediately and show this container or label. Keep person warm and at rest. Do not induce vomiting.

Notes to physician : No specific treatment. Treat symptomatically. Contact poison treatment specialist immediately if large quantities have been ingested or inhaled.

5 . Fire-fighting measures

Flammability of the product : Flammable liquid. In a fire or if heated, a pressure increase will occur and the container may burst, with the risk of a subsequent explosion. Vapors may accumulate in low or confined areas or travel a considerable distance to a source of ignition and flash back. Runoff to sewer may create fire or explosion hazard.

Extinguishing media

Suitable : Use dry chemical, CO_2, water spray (fog) or foam.

Not suitable : Do not use water jet.

Special exposure hazards : Promptly isolate the scene by removing all persons from the vicinity of the incident if there is a fire. No action shall be taken involving any personal risk or without suitable training. Move containers from fire area if this can be done without risk. Use water spray to keep fire-exposed containers cool.

Hazardous combustion products : Decomposition products may include the following materials:
carbon oxides
metal oxide/oxides

Special protective equipment for fire-fighters : Fire-fighters should wear appropriate protective equipment and self-contained breathing apparatus (SCBA) with a full face-piece operated in positive pressure mode.

Powered by ATRION

6 . Accidental release measures

Personal precautions : No action shall be taken involving any personal risk or without suitable training. Evacuate surrounding areas. Keep unnecessary and unprotected personnel from entering. Do not touch or walk through spilled material. Shut off all ignition sources. No flares, smoking or flames in hazard area. Avoid breathing vapor or mist. Provide adequate ventilation. Wear appropriate respirator when ventilation is inadequate. Put on appropriate personal protective equipment (see Section 8).

Environmental precautions : Avoid dispersal of spilled material and runoff and contact with soil, waterways, drains and sewers. Inform the relevant authorities if the product has caused environmental pollution (sewers, waterways, soil or air).

Large spill : Stop leak if without risk. Move containers from spill area. Approach release from upwind. Use spark-proof tools and explosion-proof equipment. Prevent entry into sewers, water courses, basements or confined areas. Wash spillages into an effluent treatment plant or proceed as follows. Contain and collect spillage with non-combustible, absorbent material e.g. sand, earth, vermiculite or diatomaceous earth and place in container for disposal according to local regulations (see section 13). Dispose of via a licensed waste disposal contractor. Contaminated absorbent material may pose the same hazard as the spilled product. Note: see section 1 for emergency contact information and section 13 for waste disposal.

Small spill : Stop leak if without risk. Move containers from spill area. Use spark-proof tools and explosion-proof equipment. Dilute with water and mop up if water-soluble or absorb with an inert dry material and place in an appropriate waste disposal container. Dispose of via a licensed waste disposal contractor.

7 . Handling and storage

Handling : Put on appropriate personal protective equipment (see Section 8). Eating, drinking and smoking should be prohibited in areas where this material is handled, stored and processed. Persons with a history of skin sensitization problems or asthma, allergies or chronic or recurrent respiratory disease should not be employed in any process in which this product is used. Do not breathe vapor or mist. Do not swallow. Do not get in eyes or on skin or clothing. Use only with adequate ventilation. Wear appropriate respirator when ventilation is inadequate. Do not enter storage areas and confined spaces unless adequately ventilated. Keep in the original container or an approved alternative made from a compatible material, kept tightly closed when not in use. Store and use away from heat, sparks, open flame or any other ignition source. Use explosion-proof electrical (ventilating, lighting and material handling) equipment. Use non-sparking tools. Take precautionary measures against electrostatic discharges. Vapors are heavier than air and may spread along floors. To avoid fire or explosion, dissipate static electricity during transfer by grounding and bonding containers and equipment before transferring material. Empty containers retain product residue and can be hazardous. Do not reuse container. If this material is part of a multiple component system, read the Material Safety Data Sheet(s) for the other component or components before blending as the resulting mixture may have the hazards of all of its parts.

Storage : Store in accordance with local regulations. Store in a segregated and approved area. Store in original container protected from direct sunlight in a dry, cool and well-ventilated area, away from incompatible materials (see section 10) and food and drink. Eliminate all ignition sources. Separate from oxidizing materials. Keep container tightly closed and sealed until ready for use. Containers that have been opened must be carefully resealed and kept upright to prevent leakage. Do not store in unlabeled containers. Use appropriate containment to avoid environmental contamination. Do not store above the following temperature: 120F / 49C.

Powered by ATRION

8 . Exposure controls/personal protection

Name	Result	ACGIH	OSHA	Ontario	Mexico	PPG
Titanium dioxide	TWA	10 mg/m³	15 mg/m³ TD	10 mg/m³ TD	10 mg/m³ (as Ti)	Not established
	STEL	Not established	Not established	Not established	20 mg/m³ (as Ti)	Not established
Ethylene glycol monobutyl ether	TWA	20 ppm	50 ppm S	20 ppm S	26 ppm S	Not established
	STEL	Not established	Not established	Not established	75 ppm S	Not established
2-(propyloxy)ethanol	TWA	Not established	Not established	25 ppm S	Not established	25 ppm S
Toluene	TWA	20 ppm	200 ppm Z	20 ppm	50 ppm S	Not established
	STEL	Not established	500 ppm Z A 300 ppm Z C	Not established	Not established	Not established
Silicon dioxide	TWA	Not established	Not established	Not established	10 mg/m³ 3 mg/m³ R	Not established
aluminium hydroxide	TWA	1 mg/m³	Not established	Not established	2 mg/m³	Not established

Key to abbreviations

A = Acceptable Maximum Peak
ACGIH = American Conference of Governmental Industrial Hygienists.
C = Ceiling Limit
F = Fume
IPEL = Internal Permissible Exposure Limit
OSHA = Occupational Safety and Health Administration.
R = Respirable
Z = OSHA 29CFR 1910.1200 Subpart Z - Toxic and Hazardous Substances
S = Potential skin absorption
SR = Respiratory sensitization
SS = Skin sensitization
STEL = Short term Exposure limit values
TD = Total dust
TLV = Threshold Limit Value
TWA = Time Weighted Average

Consult local authorities for acceptable exposure limits.

Recommended monitoring procedures : If this product contains ingredients with exposure limits, personal, workplace atmosphere or biological monitoring may be required to determine the effectiveness of the ventilation or other control measures and/or the necessity to use respiratory protective equipment.

Engineering measures : Use only with adequate ventilation. Use process enclosures, local exhaust ventilation or other engineering controls to keep worker exposure to airborne contaminants below any recommended or statutory limits. The engineering controls also need to keep gas, vapor or dust concentrations below any lower explosive limits. Use explosion-proof ventilation equipment.

Hygiene measures : Wash hands, forearms and face thoroughly after handling chemical products, before eating, smoking and using the lavatory and at the end of the working period. Appropriate techniques should be used to remove potentially contaminated clothing. Contaminated work clothing should not be allowed out of the workplace. Wash contaminated clothing before reusing. Ensure that eyewash stations and safety showers are close to the workstation location.

Personal protection

Eyes : Chemical splash goggles.

Hands : Chemical-resistant, impervious gloves complying with an approved standard should be worn at all times when handling chemical products if a risk assessment indicates this is necessary.

Gloves : nitrile, neoprene

Powered by ATRION

8 . Exposure controls/personal protection

Respiratory : By spraying: air-fed respirator. By other operations than spraying, in well ventilated areas, air-fed respirators could be replaced by a combination charcoal filter and particulate filter mask. Respirator selection must be based on known or anticipated exposure levels, the hazards of the product and the safe working limits of the selected respirator.

Skin : Personal protective equipment for the body should be selected based on the task being performed and the risks involved and should be approved by a specialist before handling this product.

Environmental exposure controls : Emissions from ventilation or work process equipment should be checked to ensure they comply with the requirements of environmental protection legislation. In some cases, fume scrubbers, filters or engineering modifications to the process equipment will be necessary to reduce emissions to acceptable levels.

9 . Physical and chemical properties

Physical state : Liquid.

Flash point : Closed cup: 34.44°C (94°F)

Explosion limits : Lower: 9.9%

Color : Not available.

Odor : Not available.

pH : Not available.

Boiling/condensation point : >37.78°C (>100°F)

Melting/freezing point : Not available.

Specific gravity : 1.42

Density (lbs / gal) : 11.85

Vapor pressure : 2.2 kPa (16.6 mm Hg) [20°C]

Vapor density : Not available.

Volatility : 59% (v/v), 40.29% (w/w)

Odor threshold : Not available.

Evaporation rate : 43 (butyl acetate = 1)

Partition coefficient: n-octanol/water : Not available.

% Solid. (w/w) : 59.71

10 . Stability and reactivity

Stability : Stable under recommended storage and handling conditions (see section 7).

Conditions to avoid : Avoid all possible sources of ignition (spark or flame). Do not pressurize, cut, weld, braze, solder, drill, grind or expose containers to heat or sources of ignition.

Materials to avoid : Reactive or incompatible with the following materials:,water,acids,oxidizing materials,strong alkalis

Hazardous decomposition products : Under normal conditions of storage and use, hazardous decomposition products should not be produced.

Hazardous polymerization : Under normal conditions of storage and use, hazardous polymerization will not occur.

Powered by ATRION

11 . Toxicological information

Acute toxicity

Product/ingredient name	Result	Species	Dose	Exposure
Titanium dioxide	LD50 Oral	Rat	>10 g/kg	-
Ethylene glycol monobutyl ether	LD50 Oral	Rat	250 mg/kg	-
	LD50 Dermal	Rabbit	220 mg/kg	-
	LC50 Inhalation Vapor	Rat	450 ppm	4 hours
2-(propyloxy)ethanol	LD50 Oral	Rat	3089 mg/kg	-
	LD50 Dermal	Rabbit	1.337 g/kg	-
Toluene	LD50 Oral	Rat	636 mg/kg	-
	LD50 Dermal	Rabbit	8.39 g/kg	-
	LC50 Inhalation	Rat	49 g/m3	4 hours

Chronic toxicity

Conclusion/Summary : Not available.

Defatting irritant? : Prolonged or repeated contact can defat the skin and lead to irritation, cracking and/or dermatitis.

Target organs : Contains material which causes damage to the following organs: lungs, brain, upper respiratory tract, central nervous system (CNS).
Contains material which may cause damage to the following organs: blood, kidneys, liver, heart, lymphatic system, skin, eyes.

Carcinogenicity

Carcinogenicity : Contains material which may cause cancer, based on animal data. Risk of cancer depends on duration and level of exposure.

Classification

Product/ingredient name	ACGIH	IARC	EPA	NIOSH	NTP	OSHA
Titanium dioxide	A4	2B	-	-	-	-
Ethylene glycol monobutyl ether	A3	3	-	-	-	-
Toluene	A4	3	-	-	-	-
Silicon dioxide	-	3	-	-	-	-
aluminium hydroxide	A4	-	-	-	-	-
Palygorskite	-	2B	-	-	-	-

Mutagenicity

Mutagenicity : No known significant effects or critical hazards.

Teratogenicity

Teratogenicity : No known significant effects or critical hazards.

Reproductive toxicity

Developmental effects : Contains material which may cause developmental abnormalities, based on animal data.

Fertility effects : Contains material which may impair female fertility, based on animal data.

12 . Ecological information

Environmental effects : No known significant effects or critical hazards.

Aquatic ecotoxicity

Product/ingredient name	Result	Species	Exposure
Titanium dioxide	Acute EC50 >1000000 ug/L Fresh water	Daphnia - Water flea - Daphnia magna	48 hours
Ethylene glycol monobutyl ether	Acute LC50 1490000 ug/L Fresh water	Fish - Bluegill - Lepomis macrochirus	96 hours
	Acute EC50 >1000 mg/L Fresh water	Daphnia - Water flea - Daphnia magna	48 hours
	Chronic NOEC 1000 mg/L Fresh water	Daphnia - Water flea - Daphnia magna	48 hours

Powered by ATRION

12 . Ecological information

Toluene	Acute LC50 5800 ug/L Fresh water	Fish - Rainbow trout,donaldson trout - Oncorhynchus mykiss	96 hours
	Acute EC50 6000 ug/L Fresh water	Daphnia - Water flea - Daphnia magna	48 hours
	Chronic NOEC 28000 ug/L Fresh water	Daphnia - Water flea - Daphnia magna	48 hours

13 . Disposal considerations

Waste disposal : The generation of waste should be avoided or minimized wherever possible. Significant quantities of waste product residues should not be disposed of via the foul sewer but processed in a suitable effluent treatment plant. Dispose of surplus and non-recyclable products via a licensed waste disposal contractor. Disposal of this product, solutions and any by-products should at all times comply with the requirements of environmental protection and waste disposal legislation and any regional local authority requirements. Waste packaging should be recycled. Incineration or landfill should only be considered when recycling is not feasible. This material and its container must be disposed of in a safe way. Care should be taken when handling emptied containers that have not been cleaned or rinsed out. Empty containers or liners may retain some product residues. Vapor from product residues may create a highly flammable or explosive atmosphere inside the container. Do not cut, weld or grind used containers unless they have been cleaned thoroughly internally. Avoid dispersal of spilled material and runoff and contact with soil, waterways, drains and sewers.

Disposal should be in accordance with applicable regional, national and local laws and regulations.

Refer to Section 7: HANDLING AND STORAGE and Section 8: EXPOSURE CONTROLS/PERSONAL PROTECTION for additional handling information and protection of employees. Section 6. Accidental release measures

14 . Transport information

Regulation	UN number	Proper shipping name	Classes	PG*	Additional information
UN	1263	PAINT	3	III	-
IMDG	1263	PAINT	3	III	-
DOT	1263	PAINT	3	III	-

PG* : Packing group

Reportable quantity RQ : CERCLA: Hazardous substances.: Toluene: 1000 lbs. (454 kg); Ethylene glycol monobutyl ether; 2-(propyloxy)ethanol; Acetic acid: 5000 lbs. (2270 kg);

15 . Regulatory information

United States inventory (TSCA 8b) : All components are listed or exempted.
Australia inventory (AICS) : At least one component is not listed.
Canada inventory (DSL) : All components are listed or exempted.
China inventory (IECSC) : All components are listed or exempted.
Europe inventory (REACH) : Please contact your supplier for information on the inventory status of this material.
Japan inventory (ENCS) : At least one component is not listed.
Korea inventory (KECI) : All components are listed or exempted.
New Zealand (NZIoC) : Substance Use Restricted
Philippines inventory (PICCS) : At least one component is not listed.

United States

U.S. Federal regulations :

SARA 302/304/311/312 extremely hazardous substances: No products were found.
SARA 302/304 emergency planning and notification: No products were found.

Powered by ATRION

15 . Regulatory information

SARA 302/304/311/312 hazardous chemicals: aluminium hydroxide; Titanium dioxide; Toluene; Ethylene glycol monobutyl ether
CERCLA: Hazardous substances.: Toluene: 1000 lbs. (454 kg); Ethylene glycol monobutyl ether; 2-(propyloxy)ethanol; Acetic acid: 5000 lbs. (2270 kg);

SARA 311/312 MSDS Distribution - Chemical Inventory - Hazard Identification:

Chemical name	CAS #	Acute	Chronic	Fire	Reactive	Pressure
Titanium dioxide	13463-67-7	N	Y	N	N	N
POLYAMIDOAMINE EPOXY ADDUCT	68155-17-9	Y	N	N	N	N
AMINE FUNCTIONAL POLYAMIDE EPOXY ADDUCT	68424-41-9	Y	N	N	N	N
Ethylene glycol monobutyl ether	111-76-2	Y	N	Y	N	N
Toluene	108-88-3	Y	Y	Y	N	N
2-(propyloxy)ethanol	2807-30-9	Y	N	N	N	N
Silicon dioxide	7631-86-9	N	N	N	N	N
aluminium hydroxide	21645-51-2	N	N	N	N	N
Palygorskite	12174-11-7	N	Y	N	N	N
Product as-supplied :		Y	Y	Y	N	N

SARA 313

Supplier notification :

Chemical name	CAS number	Concentration
Ethylene glycol monobutyl ether	111-76-2	5 - 10
Toluene	108-88-3	1 - 5
2-(propyloxy)ethanol	2807-30-9	1 - 5

Additional environmental information is contained on the Environmental Data Sheet for this product, which can be obtained from your PPG representative.

California Prop. 65

WARNING: This product contains a chemical known to the State of California to cause cancer and birth defects or other reproductive harm.

Canada

WHMIS (Canada) : Class B-2: Flammable liquid with a flash point lower than 37.8°C (100°F). Class D-1A: Material causing immediate and serious toxic effects (Very toxic). Class D-1B: Material causing immediate and serious toxic effects (Toxic). Class D-2A: Material causing other toxic effects (Very toxic). Class D-2B: Material causing other toxic effects (Toxic).

Mexico

Classification

Flammability : 3 **Health** : 3 **Reactivity** : 0

16 . Other information

Hazardous Material Information System (U.S.A.)

Health : 3 * **Flammability** : 3 **Physical hazards** : 0

(*) - Chronic effects

Caution: HMIS® ratings are based on a 0-4 rating scale, with 0 representing minimal hazards or risks, and 4 representing significant hazards or risks Although HMIS® ratings are not required on MSDSs under 29 CFR 1910.1200, the preparer may choose to provide them. HMIS® ratings are to be used with a fully implemented HMIS® program. HMIS® is a registered mark of the National Paint & Coatings Association (NPCA). HMIS® materials may be purchased exclusively from J. J. Keller (800) 327-6868.

The customer is responsible for determining the PPE code for this material.

National Fire Protection Association (U.S.A.)

Health : 3 **Flammability** : 3 **Instability** : 0

Date of previous issue : **11/20/2010.**

Organization that prepared the MSDS : EHS

Indicates information that has changed from previously issued version.

Powered by ATRION

16 . Other information

Disclaimer

The information contained in this data sheet is based on present scientific and technical knowledge. The purpose of this information is to draw attention to the health and safety aspects concerning the products supplied by PPG, and to recommend precautionary measures for the storage and handling of the products. No warranty or guarantee is given in respect of the properties of the products. No liability can be accepted for any failure to observe the precautionary measures described in this data sheet or for any misuse of the products.

Powered by ATRION

Material Safety Data Sheet

Date of issue 12 January 2011
Version 30

1 . Product and company identification

Product name : AQUAPON WB COMPONENT B

Code : 98-98

Supplier : PPG Industries, Inc.
One PPG Place
Pittsburgh, PA 15272

Emergency telephone number : (412) 434-4515 (U.S.)
(514) 645-1320 (Canada)
01-800-00-21-400 (Mexico)

Technical Phone Number : (412) 492-5200 (ALLISON PARK, PA) 8:00 a.m. - 5:00 p.m. EST

2 . Hazards identification

Emergency overview : WARNING!

HARMFUL OR FATAL IF SWALLOWED. HARMFUL IF ABSORBED THROUGH SKIN. CAUSES RESPIRATORY TRACT, EYE AND SKIN IRRITATION. MAY CAUSE ALLERGIC SKIN REACTION. MAY BE HARMFUL IF INHALED. SANDING AND GRINDING DUSTS MAY BE HARMFUL IF INHALED. PROLONGED OR REPEATED CONTACT MAY DRY SKIN AND CAUSE IRRITATION. CONTAINS MATERIAL THAT CAN CAUSE TARGET ORGAN DAMAGE. CANCER HAZARD - CONTAINS MATERIAL WHICH CAN CAUSE CANCER.

Do not swallow. Do not get in eyes or on skin or clothing. Avoid breathing vapor or mist. Use only with adequate ventilation. Keep container tightly closed and sealed until ready for use. Wash thoroughly after handling.

Potential acute health effects

Inhalation : May be harmful if inhaled. Irritating to respiratory system. Can irritate eyes, nose, mouth and throat.

Ingestion : Harmful or fatal if swallowed.

Skin : Toxic in contact with skin. Severely irritating to the skin. May cause an allergic skin reaction.

Eyes : Severely irritating to eyes. Risk of serious damage to eyes.

Over-exposure signs/symptoms

Repeated exposure to high vapor concentrations may cause irritation of the respiratory system and permanent brain and nervous system damage. Inhalation of vapor/aerosol concentrations above the recommended exposure limits causes headaches, drowsiness and nausea and may lead to unconsciousness or death. There is some evidence that repeated exposure to organic solvent vapors in combination with constant loud noise can cause greater hearing loss than expected from exposure to noise alone. This product contains crystalline silica which can cause lung cancer or silicosis. The risk of cancer depends on the duration and level of exposure to dust from sanding surfaces or mist from spray applications.

Medical conditions aggravated by over-exposure : Pre-existing skin disorders and disorders involving any other target organs mentioned in this MSDS as being at risk may be aggravated by over-exposure to this product.

This Material Safety Data Sheet has been prepared in accordance with Canada's Workplace Hazardous Materials Information System (WHMIS) and the OSHA Hazard Communication Standard (29 CFR 1910.1200).

See toxicological information (Section 11)

Powered by ATRION

3 . Composition/information on ingredients

Name	CAS number	%
reaction product: bisphenol-A-(epichlorhydrin); epoxy resin	25068-38-6	15 - 40
2-(propyloxy)ethanol	2807-30-9	3 - 7
Ethylene glycol monobutyl ether	111-76-2	1 - 5
Palygorskite	12174-11-7	1 - 5
Petroleum Derivatives	Not available.	0.5 - 1.5
Quartz (SiO2) (<10 microns)	14808-60-7	0.1 - 1

There are no additional ingredients present which, within the current knowledge of the supplier and in the concentrations applicable, are classified as hazardous to health or the environment and hence require reporting in this section.

4 . First aid measures

If ingestion, irritation, any type of overexposure or symptoms of overexposure occur during or persists after use of this product, contact a POISON CONTROL CENTER, EMERGENCY ROOM OR PHYSICIAN immediately; have Material Safety Data Sheet information available. Never give anything by mouth to an unconscious or convulsing person.

Eye contact : Check for and remove any contact lenses. Immediately flush eyes with running water for at least 15 minutes, keeping eyelids open. Seek immediate medical attention.

Skin contact : Remove contaminated clothing and shoes. Wash skin thoroughly with soap and water or use recognized skin cleanser. Do NOT use solvents or thinners.

Inhalation : Remove to fresh air. Keep person warm and at rest. If not breathing, if breathing is irregular or if respiratory arrest occurs, provide artificial respiration or oxygen by trained personnel.

Ingestion : If swallowed, seek medical advice immediately and show this container or label. Keep person warm and at rest. Do not induce vomiting.

Notes to physician : No specific treatment. Treat symptomatically. Contact poison treatment specialist immediately if large quantities have been ingested or inhaled.

5 . Fire-fighting measures

Flammability of the product : In a fire or if heated, a pressure increase will occur and the container may burst.

Extinguishing media

Suitable : Use an extinguishing agent suitable for the surrounding fire.

Not suitable : None known.

Special exposure hazards : Promptly isolate the scene by removing all persons from the vicinity of the incident if there is a fire. No action shall be taken involving any personal risk or without suitable training. Fire water contaminated with this material must be contained and prevented from being discharged to any waterway, sewer or drain.

Hazardous combustion products : Decomposition products may include the following materials:
carbon oxides
halogenated compounds
metal oxide/oxides

Special protective equipment for fire-fighters : Fire-fighters should wear appropriate protective equipment and self-contained breathing apparatus (SCBA) with a full face-piece operated in positive pressure mode.

6 . Accidental release measures

Personal precautions : No action shall be taken involving any personal risk or without suitable training. Evacuate surrounding areas. Keep unnecessary and unprotected personnel from entering. Do not touch or walk through spilled material. Avoid breathing vapor or mist. Provide adequate ventilation. Wear appropriate respirator when ventilation is inadequate. Put on appropriate personal protective equipment (see Section 8).

Environmental precautions : Avoid dispersal of spilled material and runoff and contact with soil, waterways, drains and sewers. Inform the relevant authorities if the product has caused environmental pollution (sewers, waterways, soil or air). Water polluting material. May be harmful to the environment if released in large quantities.

Powered by ATRION

6 . Accidental release measures

Large spill : Stop leak if without risk. Move containers from spill area. Approach release from upwind. Prevent entry into sewers, water courses, basements or confined areas. Wash spillages into an effluent treatment plant or proceed as follows. Contain and collect spillage with non-combustible, absorbent material e.g. sand, earth, vermiculite or diatomaceous earth and place in container for disposal according to local regulations (see section 13). Dispose of via a licensed waste disposal contractor. Contaminated absorbent material may pose the same hazard as the spilled product. Note: see section 1 for emergency contact information and section 13 for waste disposal.

Small spill : Stop leak if without risk. Move containers from spill area. Dilute with water and mop up if water-soluble or absorb with an inert dry material and place in an appropriate waste disposal container. Dispose of via a licensed waste disposal contractor.

7 . Handling and storage

Handling : Put on appropriate personal protective equipment (see Section 8). Eating, drinking and smoking should be prohibited in areas where this material is handled, stored and processed. Persons with a history of skin sensitization problems should not be employed in any process in which this product is used. Do not swallow. Do not get in eyes or on skin or clothing. Avoid breathing vapor or mist. Avoid release to the environment. Use only with adequate ventilation. Wear appropriate respirator when ventilation is inadequate. Keep in the original container or an approved alternative made from a compatible material, kept tightly closed when not in use. Empty containers retain product residue and can be hazardous. Do not reuse container. If this material is part of a multiple component system, read the Material Safety Data Sheet(s) for the other component or components before blending as the resulting mixture may have the hazards of all of its parts.

Storage : Store in accordance with local regulations. Store in original container protected from direct sunlight in a dry, cool and well-ventilated area, away from incompatible materials (see section 10) and food and drink. Keep container tightly closed and sealed until ready for use. Containers that have been opened must be carefully resealed and kept upright to prevent leakage. Do not store in unlabeled containers. Use appropriate containment to avoid environmental contamination. Do not store below the following temperature: 32F / 0C.

8 . Exposure controls/personal protection

Name	Result	ACGIH	OSHA	Ontario	Mexico	PPG
2-(propyloxy)ethanol	TWA	Not established	Not established	25 ppm S	Not established	25 ppm S
Ethylene glycol monobutyl ether	TWA	20 ppm	50 ppm S	20 ppm S	26 ppm S	Not established
	STEL	Not established	Not established	Not established	75 ppm S	Not established
Petroleum Derivatives	TWA	Not established	5 MG/M3	Not established	Not established	Not established
	STEL	Not established	10 MG/M3	Not established	Not established	Not established
Quartz (SiO2) (<10 microns)	TWA	0.025 mg/m³ R	10 mg/m³ R Z 30 mg/m³ TD Z 250 mppcf R Z	0.1 mg/m³ R	0.1 mg/m³ R	Not established

Key to abbreviations

A = Acceptable Maximum Peak
ACGIH = American Conference of Governmental Industrial Hygienists.
S = Potential skin absorption
SR = Respiratory sensitization

Powered by ATRION

8 . Exposure controls/personal protection

C	= Ceiling Limit	SS	= Skin sensitization
F	= Fume	STEL	= Short term Exposure limit values
IPEL	= Internal Permissible Exposure Limit	TD	= Total dust
OSHA	= Occupational Safety and Health Administration.	TLV	= Threshold Limit Value
R	= Respirable	TWA	= Time Weighted Average
Z	= OSHA 29CFR 1910.1200 Subpart Z - Toxic and Hazardous Substances		

Consult local authorities for acceptable exposure limits.

Recommended monitoring procedures : If this product contains ingredients with exposure limits, personal, workplace atmosphere or biological monitoring may be required to determine the effectiveness of the ventilation or other control measures and/or the necessity to use respiratory protective equipment.

Engineering measures : Use only with adequate ventilation. If user operations generate dust, fumes, gas, vapor or mist, use process enclosures, local exhaust ventilation or other engineering controls to keep worker exposure to airborne contaminants below any recommended or statutory limits.

Hygiene measures : Wash hands, forearms and face thoroughly after handling chemical products, before eating, smoking and using the lavatory and at the end of the working period. Appropriate techniques should be used to remove potentially contaminated clothing. Contaminated work clothing should not be allowed out of the workplace. Wash contaminated clothing before reusing. Ensure that eyewash stations and safety showers are close to the workstation location.

Personal protection

Eyes : Chemical splash goggles.

Hands : Chemical-resistant, impervious gloves complying with an approved standard should be worn at all times when handling chemical products if a risk assessment indicates this is necessary.

Gloves : nitrile, neoprene

Respiratory : If workers are exposed to concentrations above the exposure limit, they must use appropriate, certified respirators. Use a properly fitted, air-purifying or air-fed respirator complying with an approved standard if a risk assessment indicates this is necessary. Respirator selection must be based on known or anticipated exposure levels, the hazards of the product and the safe working limits of the selected respirator.

Skin : Personal protective equipment for the body should be selected based on the task being performed and the risks involved and should be approved by a specialist before handling this product.

Environmental exposure controls : Emissions from ventilation or work process equipment should be checked to ensure they comply with the requirements of environmental protection legislation. In some cases, fume scrubbers, filters or engineering modifications to the process equipment will be necessary to reduce emissions to acceptable levels.

9 . Physical and chemical properties

Physical state : Liquid.

Flash point : Closed cup: 93.33°C (200°F)

Color : Not available.

Odor : Not available.

pH : Not available.

Boiling/condensation point : >37.78°C (>100°F)

Melting/freezing point : Not available.

Specific gravity : 1.07

Density (lbs / gal) : 8.93

Vapor pressure : 2.3 kPa (16.9 mm Hg) [20°C]

Vapor density : Not available.

Volatility : 65% (v/v), 60.11% (w/w)

Odor threshold : Not available.

Powered by ATRION

9 . Physical and chemical properties

Evaporation rate : 32 (butyl acetate = 1)

Partition coefficient: n-octanol/water : Not available.

% Solid. (w/w) : 39.89

10 . Stability and reactivity

Stability : Stable under recommended storage and handling conditions (see section 7).

Conditions to avoid : No specific data.

Materials to avoid : Reactive or incompatible with the following materials:,water,acids,oxidizing materials,strong alkalis

Hazardous decomposition products : Under normal conditions of storage and use, hazardous decomposition products should not be produced.

Hazardous polymerization : Under normal conditions of storage and use, hazardous polymerization will not occur.

11 . Toxicological information

Acute toxicity

Product/ingredient name	Result	Species	Dose	Exposure
reaction product: bisphenol-A-(epichlorhydrin); epoxy resin	LD50 Oral	Rat	>2 g/kg	-
	LD50 Dermal	Rabbit	>2 g/kg	-
2-(propyloxy)ethanol	LD50 Oral	Rat	3089 mg/kg	-
	LD50 Dermal	Rabbit	1.337 g/kg	-
Ethylene glycol monobutyl ether	LD50 Oral	Rat	250 mg/kg	-
	LD50 Dermal	Rabbit	220 mg/kg	-
	LC50 Inhalation Vapor	Rat	450 ppm	4 hours

Chronic toxicity

Conclusion/Summary : Not available.

Defatting irritant? : Prolonged or repeated contact can defat the skin and lead to irritation, cracking and/or dermatitis.

Target organs : Contains material which causes damage to the following organs: brain, central nervous system (CNS).
Contains material which may cause damage to the following organs: blood, kidneys, liver, lymphatic system, upper respiratory tract, skin, eyes.

Carcinogenicity

Carcinogenicity : Contains material which can cause cancer. Risk of cancer depends on duration and level of exposure.

Classification

Product/ingredient name	ACGIH	IARC	EPA	NIOSH	NTP	OSHA
Ethylene glycol monobutyl ether	A3	3	-	-	-	-
Palygorskite	-	2B	-	-	-	-
Quartz (SiO2) (<10 microns)	A2	1	-	+	Proven.	-

Mutagenicity

Mutagenicity : No known significant effects or critical hazards.

Teratogenicity

Teratogenicity : No known significant effects or critical hazards.

Reproductive toxicity

Developmental effects : No known significant effects or critical hazards.

Fertility effects : No known significant effects or critical hazards.

Powered by ATRION

12 . Ecological information

Environmental effects : Water polluting material. May be harmful to the environment if released in large quantities.

Aquatic ecotoxicity

Product/ingredient name	Result	Species	Exposure
Ethylene glycol monobutyl ether	Acute LC50 1490000 ug/L Fresh water	Fish - Bluegill - Lepomis macrochirus	96 hours
	Acute EC50 >1000 mg/L Fresh water	Daphnia - Water flea - Daphnia magna	48 hours
	Chronic NOEC 1000 mg/L Fresh water	Daphnia - Water flea - Daphnia magna	48 hours

Other adverse effects : No known significant effects or critical hazards.

13 . Disposal considerations

Waste disposal : The generation of waste should be avoided or minimized wherever possible. Significant quantities of waste product residues should not be disposed of via the foul sewer but processed in a suitable effluent treatment plant. Dispose of surplus and non-recyclable products via a licensed waste disposal contractor. Disposal of this product, solutions and any by-products should at all times comply with the requirements of environmental protection and waste disposal legislation and any regional local authority requirements. Waste packaging should be recycled. Incineration or landfill should only be considered when recycling is not feasible. This material and its container must be disposed of in a safe way. Care should be taken when handling emptied containers that have not been cleaned or rinsed out. Empty containers or liners may retain some product residues. Avoid dispersal of spilled material and runoff and contact with soil, waterways, drains and sewers.

Disposal should be in accordance with applicable regional, national and local laws and regulations.

Refer to Section 7: HANDLING AND STORAGE and Section 8: EXPOSURE CONTROLS/PERSONAL PROTECTION for additional handling information and protection of employees. Section 6. Accidental release measures

14 . Transport information

Regulation	UN number	Proper shipping name	Classes	PG*	Additional information
UN	3082	ENVIRONMENTALLY HAZARDOUS SUBSTANCE, LIQUID, N.O.S.	9	III	-
IMDG	3082	ENVIRONMENTALLY HAZARDOUS SUBSTANCE, LIQUID, N.O.S.. Marine pollutant (reaction product: bisphenol-A-(epichlorhydrin); epoxy resin)	9	III	
DOT	Not regulated.	-	-	-	

PG* : Packing group

Reportable quantity RQ : CERCLA: Hazardous substances.: 2-(propyloxy)ethanol; Ethylene glycol monobutyl ether;

15 . Regulatory information

United States inventory (TSCA 8b) : All components are listed or exempted.
Australia inventory (AICS) : All components are listed or exempted.
Canada inventory (DSL) : All components are listed or exempted.
China inventory (IECSC) : All components are listed or exempted.
Europe inventory (REACH) : Please contact your supplier for information on the inventory status of this material.
Japan inventory (ENCS) : All components are listed or exempted.

Powered by ATRION

15 . Regulatory information

Korea inventory (KECI) : All components are listed or exempted.

New Zealand (NZIoC) : Not determined.

Philippines inventory (PICCS) : All components are listed or exempted.

United States

U.S. Federal regulations :

SARA 302/304/311/312 extremely hazardous substances: No products were found.
SARA 302/304 emergency planning and notification: No products were found.
SARA 302/304/311/312 hazardous chemicals: Ethylene glycol monobutyl ether
CERCLA: Hazardous substances.: 2-(propyloxy)ethanol; Ethylene glycol monobutyl ether;

SARA 311/312 MSDS Distribution - Chemical Inventory - Hazard Identification:

Chemical name	CAS #	Acute	Chronic	Fire	Reactive	Pressure
reaction product: bisphenol-A-(epichlorhydrin); epoxy resin	25068-38-6	Y	N	N	N	N
2-(propyloxy)ethanol	2807-30-9	Y	N	N	N	N
Ethylene glycol monobutyl ether	111-76-2	Y	N	Y	N	N
Palygorskite	12174-11-7	N	Y	N	N	N
Petroleum Derivatives	Not available.	Y	N	N	N	N
Quartz (SiO2) (<10 microns)	14808-60-7	N	Y	N	N	N
	Product as-supplied :	Y	Y	N	N	N

SARA 313
Supplier notification :

Chemical name	CAS number	Concentration
2-(propyloxy)ethanol	2807-30-9	3 - 7
Ethylene glycol monobutyl ether	111-76-2	1 - 5

Additional environmental information is contained on the Environmental Data Sheet for this product, which can be obtained from your PPG representative.

California Prop. 65

WARNING: This product contains a chemical known to the State of California to cause cancer.

Canada

WHMIS (Canada) : Class D-1A: Material causing immediate and serious toxic effects (Very toxic). Class D-1B: Material causing immediate and serious toxic effects (Toxic). Class D-2A: Material causing other toxic effects (Very toxic). Class D-2B: Material causing other toxic effects (Toxic).

Mexico

Classification

Flammability : 1 **Health** : 3 **Reactivity** : 0

16 . Other information

Hazardous Material Information System (U.S.A.)

Health : 3 * **Flammability** : 1 **Physical hazards** : 0

(*) - Chronic effects

Caution: HMIS® ratings are based on a 0-4 rating scale, with 0 representing minimal hazards or risks, and 4 representing significant hazards or risks Although HMIS® ratings are not required on MSDSs under 29 CFR 1910.1200, the preparer may choose to provide them. HMIS® ratings are to be used with a fully implemented HMIS® program. HMIS® is a registered mark of the National Paint & Coatings Association (NPCA). HMIS® materials may be purchased exclusively from J. J. Keller (800) 327-6868.

The customer is responsible for determining the PPE code for this material.

National Fire Protection Association (U.S.A.)

Health : 3 **Flammability** : 1 **Instability** : 0

Date of previous issue : **6/5/2010.**

Organization that prepared the MSDS : EHS

Powered by ATRION

16 . Other information

Indicates information that has changed from previously issued version.

Disclaimer

The information contained in this data sheet is based on present scientific and technical knowledge. The purpose of this information is to draw attention to the health and safety aspects concerning the products supplied by PPG, and to recommend precautionary measures for the storage and handling of the products. No warranty or guarantee is given in respect of the properties of the products. No liability can be accepted for any failure to observe the precautionary measures described in this data sheet or for any misuse of the products.

Powered by ATRION

ROCKSOLID – PEARLESCENCE METALLIC FLOORING

ROCKSOLID Polycuramine is combined with **Pearlescence Metallic Tints** to create one-of-a-kind floor coatings with high gloss finishes. Application is technically easy, but there are a few tricks and suggestions listed below to guarantee high quality results. The biggest thing to remember when installing this coating is "practice makes perfect" – a statement relating to the varied results that can be achieved using different roller swirl techniques. The roller swirl technique will give the coating a deeper, wavier look from different viewpoints on the floor. It will be imperative to try different techniques and develop an installation style that can be duplicated. Basically you never know what the finished look will be, but you can steer your designs in the right direction with some practice and consistency.

POLYCURAMINE IS A 2A:1B RATIO MATERIAL THAT WILL BE COMBINED WITH PEARLESCENCE METALLIC POWDER TINT TO CREATE A SELF-LEVELING PIGMENTED BODY COAT. ALWAYS FOLLOW THE MIX CHARTS TO INCORPORATE THE PROPER AMOUNTS OF TINT.

THIS COATING MUST BE INSTALLED OVER A PRIMER COAT OF ROCKSOLID INDUSTRIAL BASECOAT, COLOR TINTED BLACK TO ACCENT THE METALLIC FLOORING.

MOST IMPORTANT STEP

THE INSTALLATION AREA MUST BE EXTREMELY CLEAN AT THE TIME OF APPLICATION. AIRBORNE DUST AND DEBRIS CAN FALL INTO THE COATING – WHICH IS HIGH GLOSS – AND WILL DIMINISH THE SHINE AND CAUSE THE FLOOR COATING TO LOOK DIRTY.

- Thoroughly vacuum the floors, walls, perimeter trim, window sills, etc. to make sure that everything is dust free.
- Wear protective shoe booties over your shoes when on spikes so nothing can fall off into the wet coating.
- Always use a pair of sharp, clean spiked shoes during the application so as not to create holes or marks in the coating.

APPLICATION – THIS PRODUCT IS NOT TO BE USED BELOW 50°F SLAB OR AMBIENT TEMPERATURE

- Remove the lid from the **Part A** 3-gallon bucket and use a drill with paddle style mixer to spin the material for at least 1 minute prior to use. Replace the lid immediately to avoid contamination of the coating. Remove the lid from the **Part B** 1-gallon paint can and use a paint stick to mix the material for at least 1 minute.
- Use a small, sensitive digital scale to measure out the necessary quantity of Pearlescence Metallic Powder Tint. (**4oz. of Metallic Tint per 1 gallon of mixed product by weight**) If a job requires multiple batches of material to be mixed, it is beneficial to pre-measure and set aside the quantities of powder tint. Cover the containers with some sort of lid to keep the powder clean until use.

- **DO NOT POUR OUT AND SET ASIDE PRE-MEASURED QUANTITIES OF THE POLYCURAMINE RESINS – COULD GET CONTAMINATED**
- Pour desired quantity of Polycuramine Part A into a calibrated mixing container
- Add desired quantity of Polycuramine Part B into the same calibrated mixing container
- Add desired quantity of pre-measured Pearlescence Metallic Powder Tint to the mixing container.
- Spin the materials slowly but thoroughly for at least 1 minute using a drill and paddle style mixer. Be careful not to introduce air and moisture into the coating during mixing. Mix until the liquid is lump free, smooth and consistent.

ROCKSOLID FLOORS 2271 2ND STREET N; NORTH ST. PAUL, MN 55109
www.rocksolidfloors.com – 866-765-4310

ROCKSOLID – PEARLESCENCE METALLIC FLOORING

- Use the drill and paddle style mixer to blend the materials for an additional 2 minutes.
- Pour the mixed material along the length of the floor in ribbons about 8" wide.
- Using a ¼" notched squeegee while on shoe spikes, spread the material evenly over the entire floor. Leave small ribbons near the perimeter walls for another installer to cut in with a brush. Polycuramine has excellent self-leveling properties, but do not allow material to pool and build up along the edges.
- The notched squeegee will leave rows in the coating that need to be flattened out. Back-rolling the coating will eliminate the rows and leave a more uniform finish. Once back-rolled, use a 9" – 3/8 semi-smooth solvent resistant microfiber rollers to put circular patterns in the floor (like applying wax to a car). This will make the majority of the coating system look opaque (not see through) and will give you the best result. Keep in mind that roller marks will be visible upon curing if not dispersed by texturing the surface by using the roller swirl technique.
- **ALWAYS CHECK THE FLOOR FOR LARGE DEBRIS, STRAY HAIRS FROM BRUSHES, ETC. DURING THE INSTALLATION PROCESS. ONCE THESE ITEMS CURE IN THE COATING THEY ARE PERMANENT.**

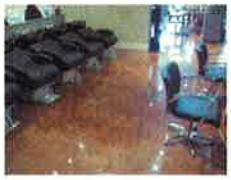

ROCKSOLID FLOORS 2271 2ND STREET N; NORTH ST. PAUL, MN 55109
www.rocksolidfloors.com – 866-765-4310

RockSolid Polycuramine Metallic System Menards Vestibule Areas

SYSTEM MATERIALS

a. Primer: RockSolid Industrial Basecoat 1 gallon Pouch with Black tinted Custom Stabilizer shot
b. Basecoat: RockSolid Polycuramine Metallic Parts A and B with Pearlescence Metallic Tint
d. Topcoat: RockSolid Industrial Topcoat with Wear Tough Additive

PREPARATION

1. New and existing concrete surfaces shall be free of oil, grease, curing compounds, loose particles, moss, algae growth, laitance, friable matter, dirt, and bituminous products.
2. Moisture Testing: Perform tests recommended by manufacturer as follows:
   a. Perform Relative Humidity Test using in situ probes following ASTM F 2170. Proceed with installation only after substrates have a maximum 75% relative humidity level measurement.
   b. Perform Calcium Chloride Test following procedures listed in ASTM F1869. Proceed with installation only after substrates have a maximum 3 lbs./1000 sf/24 hrs. reading.
   c. If the relative humidity exceeds 75%, or calcium chloride testing yields results higher than 3 lbs./1000 sf/24 hrs., then a suitable RockSolid Moisture Stopping Primer (moisture mitigation system – type and number of coats depend on actual results) must be installed prior to resinous flooring installation. Slab-on grade substrates without a vapor barrier may also require the moisture mitigation system.
3. There shall be no visible moisture present on the surface at the time of application of the system. Compressed oil-free air and/or a light passing of a propane torch may be used to dry the substrate.
4. Mechanical surface preparation
   a. Shot blast all surfaces to receive flooring system with a mobile steel shot, dust recycling machine (Blast-Pro or equal). Diamond grinding with 25 grit diamonds or coarser is also an acceptable method for preparation. All surface and embedded accumulations of paint, toppings, hardened concrete layers, laitance, power trowel finishes and other similar surface characteristics shall be completely removed leaving a bare concrete surface having a minimum profile of CSP 3-4 as described by the International Concrete Repair Institute.
   b. Floor areas inaccessible to the mobile blast machines shall be mechanically abraded to the same degree of cleanliness, soundness and profile using diamond grinders, needle guns, bush hammers, or other suitable equipment.
   c. Where the perimeter of the substrate to be coated is not adjacent to a wall or curb, a minimum 1/8 inch key cut shall be made to properly seat the system, providing a smooth transition between areas. The detail cut shall also apply to drain perimeters and expansion joint edges.
   d. Cracks and joints (non-moving) greater than 1/8 inch wide are to be chiseled, chased, or chipped-out and repaired per manufacturer's recommendations.
5. At spalled, deteriorated or worn areas, mechanically remove loose, damaged or delaminated concrete until clean, sound concrete appears. Patch per manufacturer's recommendations.
6. Special care should be taken with this system to ensure minimal airborne contaminants present during application. This may include masking off heating ducts, windows, doorways and should involve a thorough cleaning of all walls and surfaces in the vicinity of the installation.

APPLICATION

1. The system shall be applied in four distinct steps as listed below:
   a. Substrate preparation / Concrete repairs
   b. Primer application
   c. Basecoat application
   d. Topcoat application
2. Immediately prior to the application of any component of the system, the surface shall be dry and any remaining dust or loose particles shall be removed using a vacuum or clean, dry, oil-free compressed air.
3. The handling, mixing and addition of components shall be performed in a safe manner to achieve the desired results in accordance with the Manufacturer's recommendations.

PRIMER

1. The primer shall be RockSolid Industrial Base Coat Pouch material with custom black stabilizer shot (1 gallon Pouch)
2. The primer shall be applied with 3/8 nap rollers at the rate of 400 sf/gal. rolled out of a pan.

BASECOAT

1. The basecoat shall be RockSolid Polycuramine that is mixed at the ratio of 2 parts A to 1 part B per the manufacturer's instructions. RockSolid Pearlescence Metallic Tint will be added at 4 oz. by weight per gallon of mixed material.
2. The basecoat shall be applied by ¼" notched squeegee and either back rolled with 3/8 nap rollers rate of 90-100 sf/gal.
3. Allow material to dry to a tack free finish (at least 10 hours)

TOPCOAT

1. The topcoat shall be RockSolid Industrial Top Coat with Wear Tough Additive. This is a single component product, no mixing of A and B parts.
    a. Add 1 quart of Wear Tough Additive (pre-packaged) to each gallon of Industrial Topcoat. Mix occasionally to keep the additive suspended in the coating.
2. The topcoat shall be roller applied out of a pan with 3/8 nap rollers at the rate of 500 sf/gal.
3. After 24 hours, the floor can be returned to full service.

ALUMINUM OXIDE BROADCAST

1. For additional non-slip, broadcast Aluminum Oxide as needed at a rate not to exceed 1 qt of Wear Tough Additive for each 1000sqft.
2. Final Texture is to be determined by Menards and contractor.

Material List wth Item Numbers

MATERIAL	ITEM NUMBER	COVERAGE RATE	PACKAGING SIZE	INVOICE COST	TOTAL SF
RSI BASECOAT	RSI-GCC-1CC	400 SF/GAL	1 GALLON POUCH	$157.99	1030
POLYCURAMINE METALLIC	RSI-PC96-3G	100 SF/GAL	3 GALLON KIT	$249.98	1030
METALLIC POWDER TINT	VARIES BY COLOR	4 OZ/GAL	12 OZ. CONTAINER	$54.98	1030
INDUSTRIAL TOPCOAT	RSI-TPC-1C	500 SF/GAL	2 GALLON KIT	$155.00	1030
WEAR TOUGH ADDITIVE	RSI-UDP-1QT	32 OZ/GAL	32 OZ	$12.57	1030
ANTI-SLIP ADDITIVE	RSI-ALOXIDE-80	3 LBS/1000 SF	3 LB CONTAINER	$19.99	1030
1/4" NOTCH SQUEEGEE	1/4" NOTCH SQUEEGEE	N/A	1 ASSEMBLY	$38.68	N/A

Home Care Technical Specification

1 ½” Peened Grab Bar – Concealed Screw R8900

Stock Numbers:

- **R8912P – 12” Grab Bar**
  Stainless Steel Peened Finish
  Concealed Screw Mounting
  1 ½” Diameter Bar
- **R8918P – 18” Grab Bar**
  Stainless Steel Peened Finish
  Concealed Screw Mounting
  1 ½” Diameter Bar
- **R8924P – 24” Grab Bar**
  Stainless Steel Peened Finish
  Concealed Screw Mounting
  1 ½” Diameter Bar
- **R8930P – 30” Grab Bar**
  Stainless Steel Peened Finish
  Concealed Screw Mounting
  1 ½” Diameter Bar
- **R8936P – 36” Grab Bar**
  Stainless Steel Peened Finish
  Concealed Screw Mounting
  1 ½” Diameter Bar
- **R8942P – 42” Grab Bar**
  Stainless Steel Peened Finish
  Concealed Screw Mounting
  1 ½” Diameter Bar

Materials:

Peened grab bar rods are formed from 18–gauge (.049) type 304 stainless steel tubing with a satin finish.

Compliance:

- ADA Compliant
- Tested to 300 lbs. pull

Dimensions:

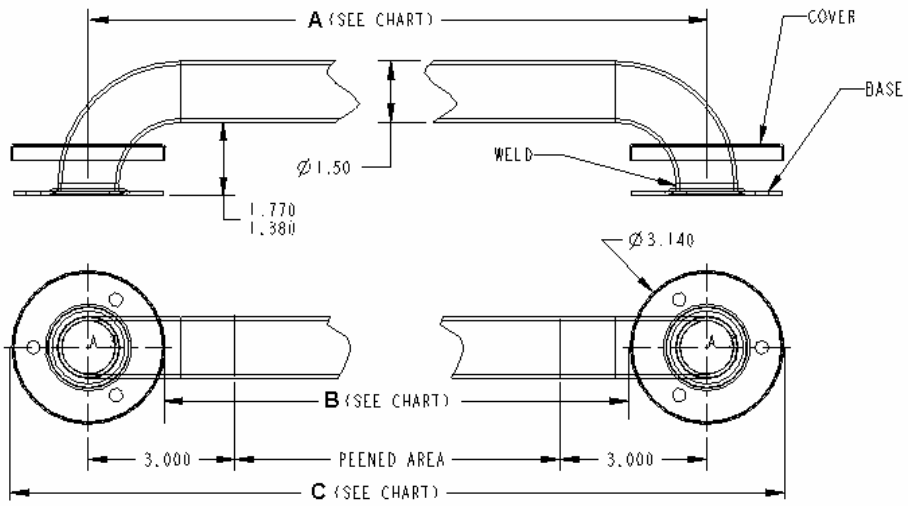

	Dim. A	Dim. B	Dim. C
R8912P	12.00	8.86	15.14
R8918P	18.00	14.86	21.14
R8924P	24.00	20.86	27.14
R8930P	30.00	26.86	33.14
R8936P	36.00	32.86	39.14
R8942P	42.00	38.86	45.14

Installation Instructions:

1. All screws must mount firmly into a wood stud.
2. Place the grab bar on the wall in the desired location. Use a level, if desired, to verify placement.
3. With a pencil, lightly mark the (6) mounting hole locations.
4. Mounting unit on wall using the #10 2” screws (provided).
5. Snap flange covers into place.

Stock Number:_____Grab Bar
By Creative Specialties

Creative Specialties International

25300 AL MOEN DRIVE • NORTH OLMSTED, OH 44070
CORPORATE HEADQUARTERS: (800) 321-8809 • FAX: (800) 848-6636
INTERNATIONAL: (440) 962-2000 • FAX: (440) 962-2726
CUSTOMER SERVICE (USA): 800-882-0116 • FAX: (888) 379-2720
WWW.SHOWHOUSE.MOEN.COM

©Copyright Creative Specialties International

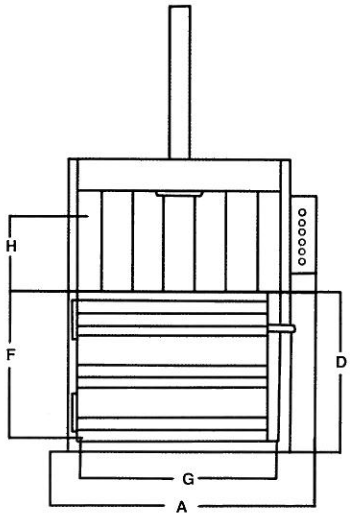

FRONT VIEW

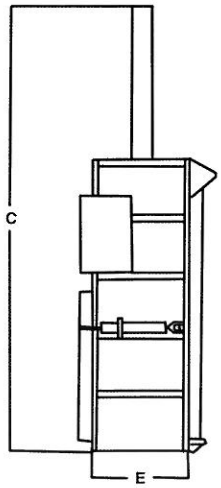

SIDE VIEW

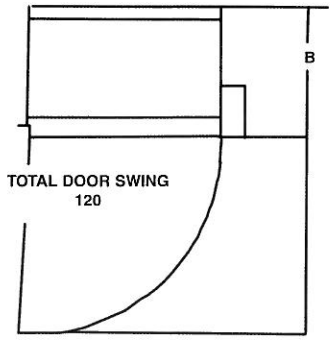

TOP VIEW

DIMENSIONAL DATA

A	(OVERALL WIDTH)	80"
B	(OVERALL DEPTH)	34"
C	(OVERALL HEIGHT)	139"
D	(FEED HEIGHT)	50"
E	(BALE CHAMBER DEPTH)	30"
F	(BALE CHAMBER HEIGHT)	44"
G	(LOAD OPENING WIDTH)	60"
H	(LOAD OPENING HEIGHT)	24"
I	(BALE DOOR CLEARANCE)	61"

BALE SIZE DATA

BALE WIDTH	60"
BALE DEPTH	30"
BALE HEIGHT	42"
BALE TIES (HIGH TENSILE WIRE)	6-14 GA. * 14'
BALE WEIGHT (OCC)	850 to 1,100 LBS.

6030HD VERTICAL BALER

SPECIFICATIONS

- [X] 6" Dia. * 48" Cylinder with 4" rod
- [X] 62,200 lbs. baling force
- [X] 10 HP Motor
- [X] 10 GPM - 1 Stage Pump
- [X] 3 Phase 230/460 Volt
- [X] Bale Size: 60" L * 30" W * 48" H
- [X] Baler Weight 4,850 lbs

INCLUDED EQUIPMENT & FEATURES

- ☑ Auto/cycle hold position controls
- ☑ **AUTOMATIC** load door opener
- ☑ **NYLATRON** wear pads, no metal on metal contact
- ☑ Easy tie channel system for fast, **easy tying** off bales
- ☑ **SYSTEM INDICATOR LIGHT** to assure ease of operation
- ☑ **SOFT SHIFT** design for added life of hydraulic components
- ☑ **TIMED BALING** sequence for dense consistent bales **NO PRESSURE SWITCHES**
- ☑ **Key operated** controls for authorized use only
- ☑ **FEED GATE MECHANICAL LOCK** to lower door for safe baling operation
- ☑ **COMPUTER OPERATED,** with indicator lights IE: indicate door open
- ☑ **DWELL time against cardboard for dense consistent bales**
- ☑ **Front and rear retainer teeth to prevent build up**
- ☑ **Proximity** (safety) **sensors** on both doors to assure safe operation, bottom door shut and feed gate locked before auto cycle can be initiated.

OPTIONS

Take a look at our **72" Vertical Baler**
208 & 575 Volt three phase
Single Phase
WEB SITE: ACEEC.COM

ACE Equipment Company
1404 Smith Ave.
Antigo, WI 54409
PH: (715) 627-2400
Fax: (715) 627-2402

ACE EQUIPMENT COMPANY

ACE EQUIPMENT COMPANY

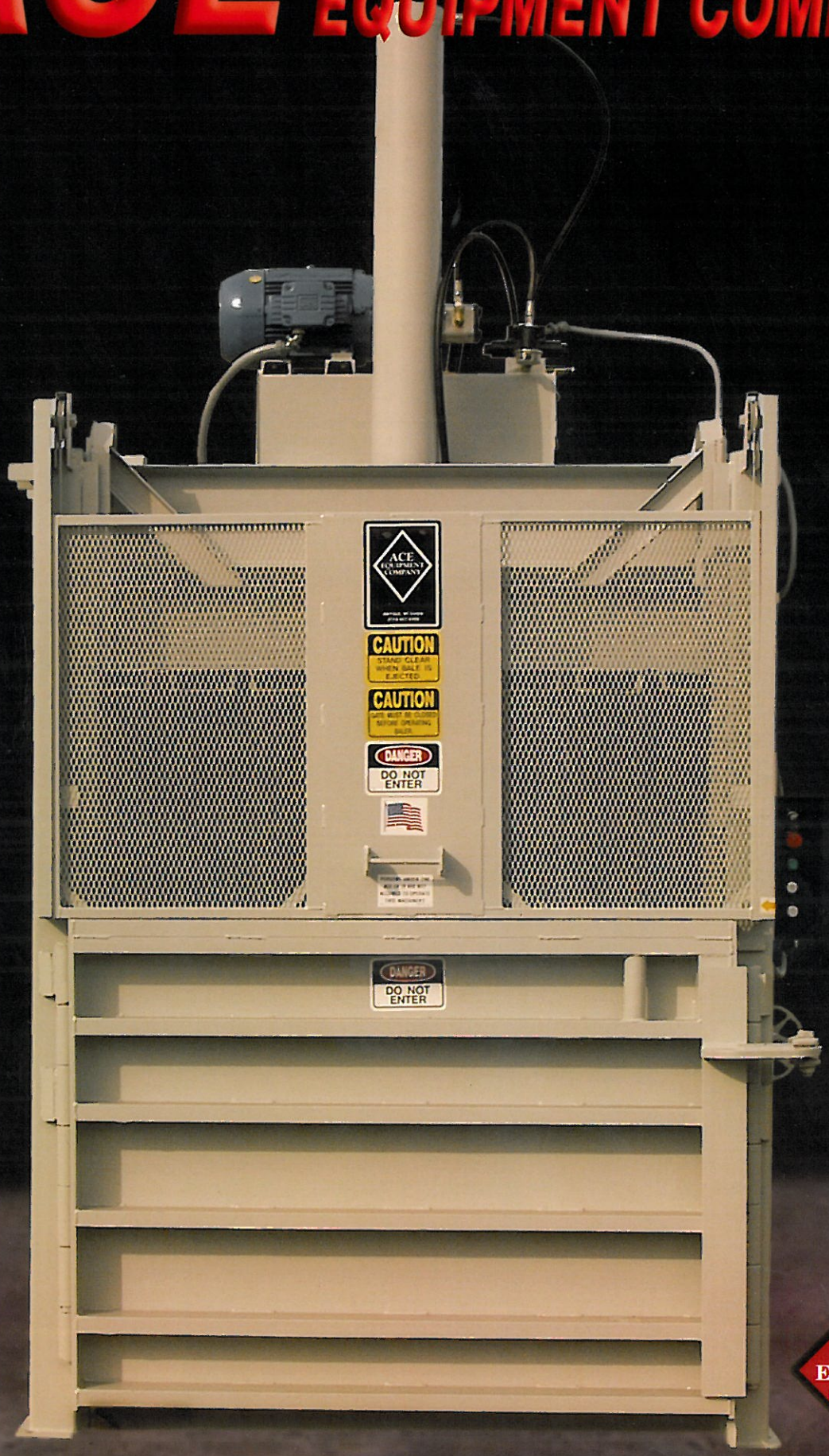

ACE
EQUIPMENT
COMPANY

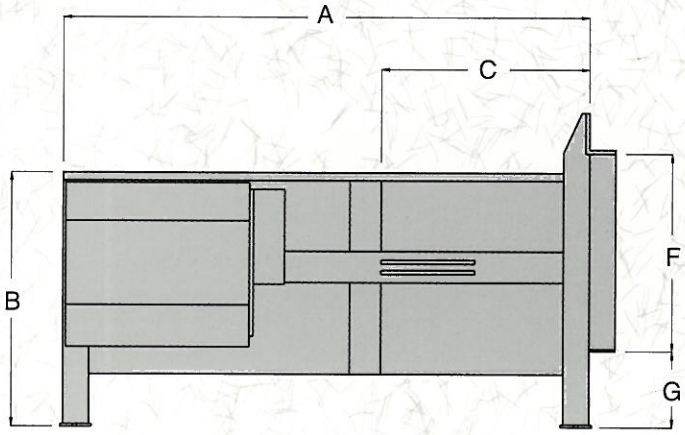

SIDE ELEVATION

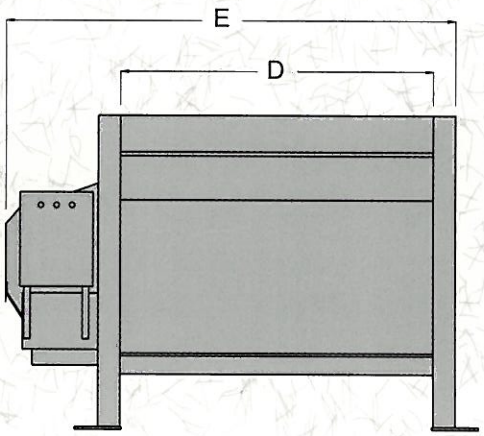

FRONT ELEVATION

DIMENSIONS	A	B	C	D	E	F	G
A-2	94-1/4"	48-5/8"	45-1/4"	60"	86"	38-1/2"	14-1/2"
A-3	149-1/2"	48-5/8"	72"	60"	86"	38-1/2"	14-1/2"

PHYSICAL DIMENSIONS IN INCHES

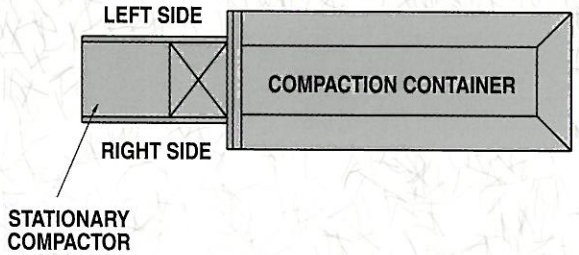

Specifications	A-2	A-3
Charge Box Capacity MFRS. Rating	2 Cu. Yds.	3 Cu. Yds.
Clear Top Opening	60" x 40-1/4"	60" x 67"

Structural Specifications		
Charge Box Sides	1/4"	1/4"
Charge Box Floor	1/2"	1/2"
Ram Face Plate	1/2"	1/2"
Ram Bottom	1/2" A.R.	1/2" A.R.

Electrical		
Electric Motor	10 HP	10 HP
3 Phase / 60 HZ. / 208-230 / 460 VAC		
STANDARD CONTROLS: Keylock, Start, Stop, Reverse		

Performance		
Cycle Time:	49 Sec	74 Sec
Maximum Force	62,800 Lbs.	62,800 Lbs.
Ram Penetration	15"	15"
Weight	4600 Lbs.	5800 Lbs.

Features & Benefits

- The power unit mounted on either side for safe and easy maintenance.
- Key operated controls means only authorized personnel can operate the compactor.
- A full 15" of ram penetration for better compaction.
- The breaker bar is mounted above the compactor, therefore less packing resistant and create better compaction force.
- The shorter length allows it to be user friendly, and outperform in chute installations or room constraint installation.
- The compactors are built in a fixture to assure consistent and accurate construction every time.
- The ram bottom is 1/2" abrasion resistant steel for long life of the equipment.
- The ram face is 1/2" plate backed with structural channels.
- The floor is built for heavy demands, 1/2" plate backed with heavy 4" structural channels.

Optional Equipment:

- Cart dumper systems
- Multiple cycles
- Full and advance warning lights
- Remote controls
- Oil heaters
- Custom chutes
- Custom enclosures
- Many others available

ACE EQUIPMENT COMPANY

ACE EQUIPMENT CO.
1404 SMITH AVE.
ANTIGO, WI 54409
PH. (715) 627-2400
FAX (715) 627-2402
www.aceec.com
Solid Waste & Recycling Equipment

LEASING PROGRAM AVAILABLE

Copyright © 2000 ACE Equipment Co.

ACE Equipment Company specifications are subject to change without notice in order to accommodate improvements to its equipment.

ACE EQUIPMENT COMPANY

A-2/A-3 STATIONARY COMPACTORS

PROFESSIONALLY DESIGNED FOR: INDUSTRIAL - COMMERCIAL - MUNICIPAL - RECYCLING APPLICATIONS

ACE EQUIPMENT COMPANY

FAIRBORN USA INC.

Fairborn USA Inc.
205 Broadview Street
Upper Sandusky, OH 43351
1-800-262-1188
Fax 1-419-294-4980

Series 1000L
L-Pad Foam Dock Seal
With Fixed Head Pad

All Models

Installation Instructions

WARNING Do not install this product unless you read and understand the Warnings and Installation Instructions contained in this manual. Failure to do so could result in serious injury or death.

SERIES 1000L FOAM DOCK SEAL
Installation Instructions

CHECK FIRST:

To ensure proper measurement to accommodate the Dock Seal you are installing, check the following:

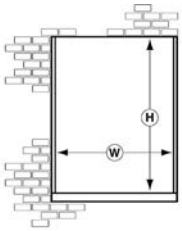

A. Check the door height and width to verify that your side pads and head pad are properly sized.

B. It is recommended that the head pad or side pads be compressed not more than a maximum of 6"; nor more than 45% of its total projection. A minimum of 4" compression is advised to compensate for vehicles not evenly spotted against the building.

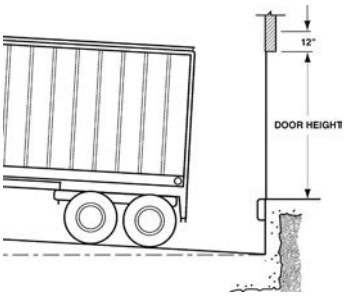

C. If the approach is not level, check to make sure the side pads taper to accommodate the angle of the truck. Also on a tapered drive, follow Step "B" for both the top and bottom of the seal, allowing for the recommended compression.

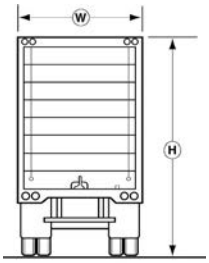

REAR VIEW OF TRUCK

D. Check the heights of incoming carriers that will be utilized at this door, to ensure that the head pad is of proper elevation to accommodate the height range of these vehicles.

E. In 95% of installations, the inside edge of the face of the side pads should be 7'-6" I.D. If achieving the 7'-6" dimension requires extending the wood backing of the side pads into the door opening width, use the following recommendation:

Weld or anchor a structural angle the full length of the side jambs, not allowing any portion of the wood backing to be exposed into the door opening. It is appropriate to lag through the leg of the angle into the back of the wood approximately 1" from the edge of the board.

> ⚠ WARNING
> Improper lifting or attachment of seal/shelter can cause serious injury or death.
>
> Installation requires:
> - A structurally sound building wall,
> - Barricades to keep people away from the area,
> - Proper attachment of anchoring devices,
> - Two or more people,
> - A lifting device capable of lifting at least 500 lbs. at the installation angle.
>
> If you have questions, contact your supervisor, your local Fairborn distributor or Fairborn USA at 1-800-262-1188.

INSTALLATION:

1. There are two types of recommended installation; one being the head pad mounted above the side pads, the other being the head pad mounted between the side pads. Before proceeding with installation, verify which of the two types you have.

2. Mark the center of the door opening on the dock floor.

3. From this center point, measure 3'-9" in each direction to determine the position of the side pads. This should give you your 7'-6" I.D. (See Step "E").

4. If the side pads are flush with the door jamb, all standard mounting hardware can be utilized, which is normally: (2) 3/32"x3"x5" flat mounting brackets per pad and (2) 3/32"x3"x1-1/2"x3-1/2" angle mounting brackets per pad.

The flat brackets are secured by means of welding or anchoring into the doorjamb allowing precisely 1-7/16" projecting away from the jamb. The flat bracket should be mounted with the slotted end against the jamb, and the end with two holes extending 1-7/16" away from the jamb. If the side pads are not flush with the doorjamb, install angle brackets by following Step 6, and complete the jamb installation by following Step "E".

5. After the jamb brackets have been installed, mount (2) of the angle brackets on the outside of the side pads. NOTE: There are right and left side pads. To distinguish between the two, the air pockets are to be on the outside of the pad, pointing down.

6. With the appropriate side pad, predrill and mount two of the angle brackets 1'-6" from each end, using the lag screws provided. The brackets should be mounted so the slotted leg will mount against the building face. When installing the angle brackets be sure to keep the slotted leg flush with the back of the seal.

7. With the angle brackets installed, hold pad in place against the premounted jamb brackets, then predrill into the wood backing and lag secure. Mount onto the face of the building through the slot with appropriate anchors.

8. With the side pads in place, mount the head pad following the same procedures, except the air pockets point down into the opening and the head jamb brackets are mounted 1'-0" in from each end of the side jamb.

9. Caulk and fill all voids. Clean pads and hardware as required. Clear the dock area of any debris resulting from installation procedure.

SUGGESTED MOUNTING METHODS:

(Mounting anchors not included.)

Concrete or Brick Wall: Try to hit mortar joints. Use 1/2" or 3/8" x 3" expansion anchors. use through-bolt fastening if anchors will not hold, 3/8" threaded rod is recommended.

Precast Concrete: Same as above.

Metal Skin Building: Through-bolt fastening as above. Use a back-up plate (steel or wood) to support bolts or anchor through existing building horizontal and vertical structural members when possible.

NOTE: Dock Seals must have adequate bumper protection, 4" minimum.

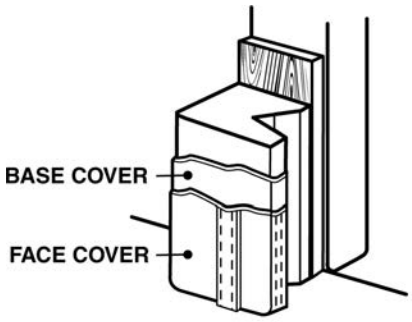

REINFORCED FACE

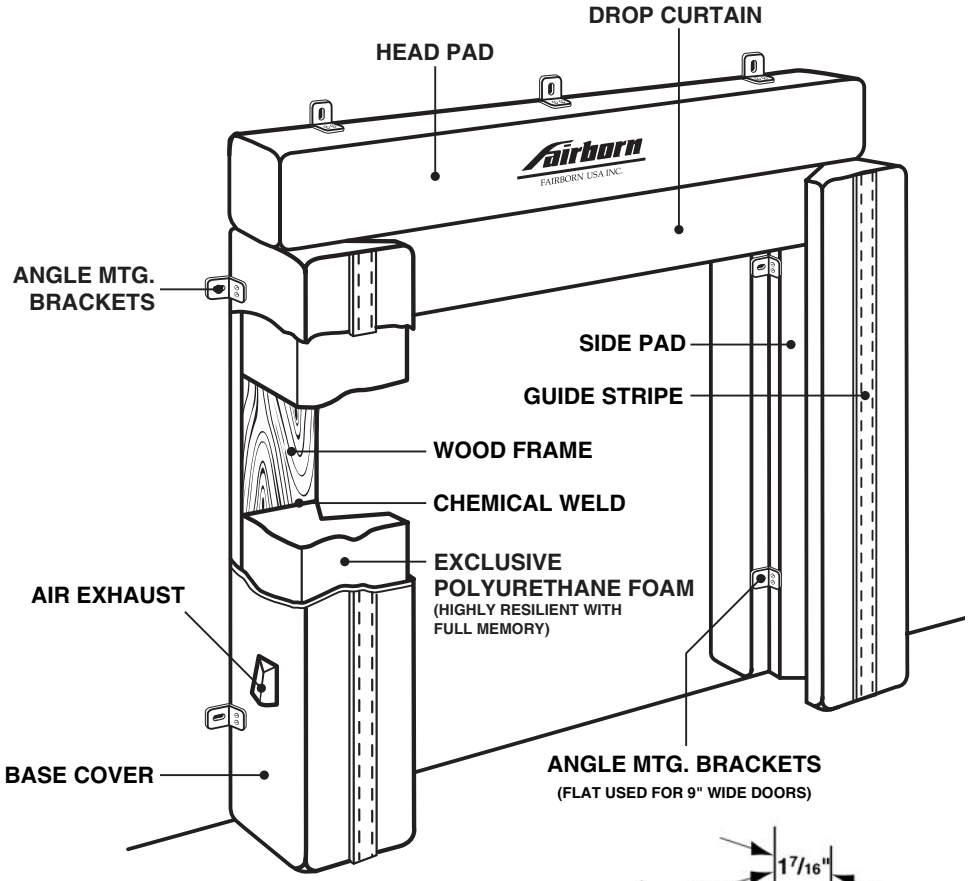

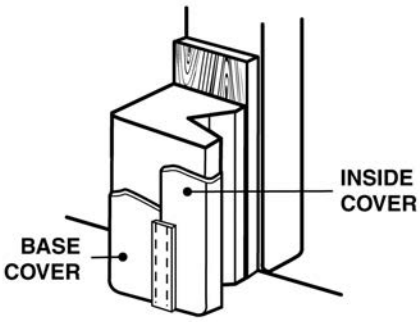

REINFORCED INSIDE

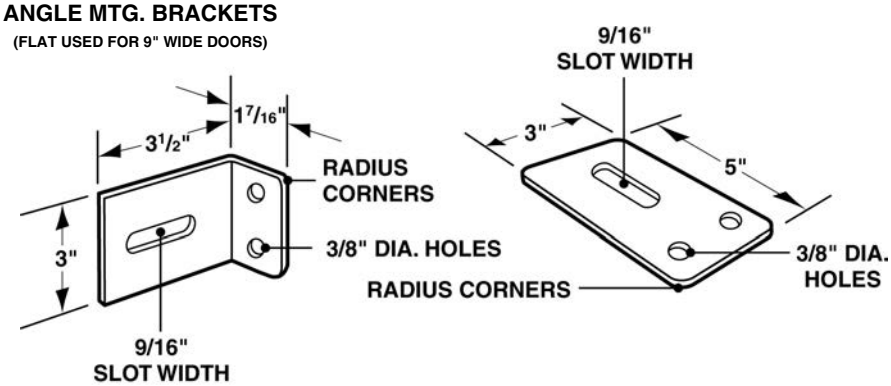

ANGLE AND FLAT MOUNTING BRACKETS

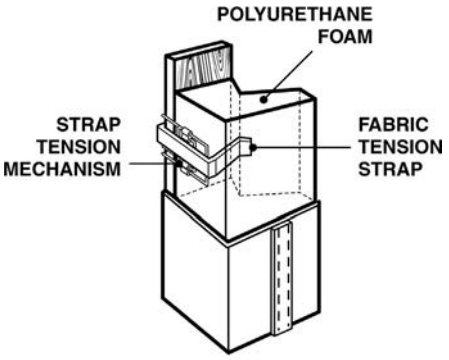

SIDE PAD COVER SUPPORT
(ASSEM. - TYP. 6 PLACES @ PAD)

OPTIONAL DYNA-ARMOR® PLEAT:

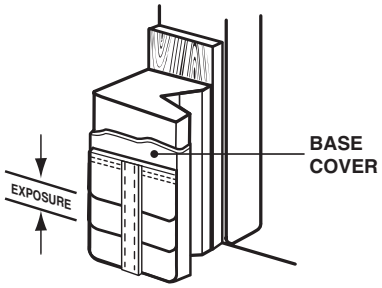

DYNA-ARMOR PLEATS

4" EXPOSURE
8" EXPOSURE
16" EXPOSURE

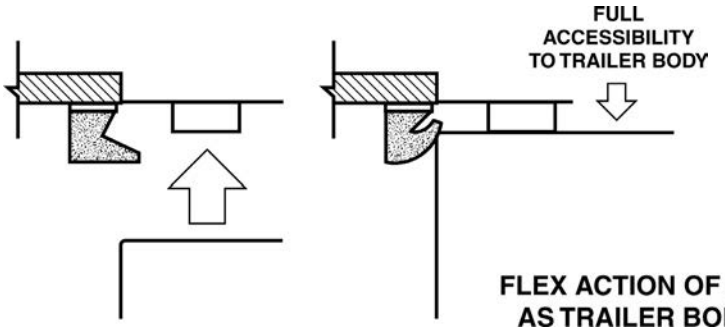

FLEX ACTION OF SIDE PADS SHOWN AS TRAILER BODY ENTERS DOCK

LIMITED PRODUCT WARRANTY

GENERAL

FAIRBORN USA INC. EXTENDS THIS LIMITED WARRANTY TO THE ORIGINAL BUYER AND WARRANTS THAT ALL PRODUCTS MANUFACTURED BY FAIRBORN SHALL BE FREE FROM ORIGINAL DEFECTS IN WORKMANSHIP AND MATERIALS FOR ONE YEAR FROM DATE OF SHIPMENT, PROVIDED SAME HAVE BEEN PROPERLY SIZED FOR THE APPLICATION, STORED, INSTALLED, SERVICED, MAINTAINED AND OPERATED. THIS WARRANTY SHALL NOT APPLY TO PRODUCTS WHICH HAVE BEEN ALTERED OR REPAIRED IN ANY WAY SO AS, IN FAIRBORN'S JUDGMENT, AFFECTS ITS PERFORMANCE OR RELIABILITY, NOR WHICH HAVE BEEN IMPROPERLY INSTALLED OR SUBJECTED TO MISUSE, NEGLIGENCE, OR ACCIDENT, OR INCORRECTLY USED IN COMBINATION WITH OTHER SUBSTANCES. COMPENSATION FOR PRODUCTS HAVING WEAR AND TEAR CAUSED BY NORMAL USAGE IS NOT PROVIDED FOR BY THIS WARRANTY.

DYNALON

IN CONSIDERATION OF THE SAME CONDITIONS AND RESTRICTIONS AS STATED ABOVE, DYNALON IS WARRANTED AGAINST THE EFFECTS OF WEATHERING FOR A PERIOD OF FIVE YEARS AS DESCRIBED WITHIN. AS PART OF THIS AGREEMENT THE TERM "WEATHERING" IS DEFINED AND LIMITED TO THE EFFECTS OF SUNLIGHT (ULTRAVIOLET RADIATION), WATER (ATMOSPHERIC PRECIPITATION), COLD, AND HEAT. THIS WARRANTY IS NOT APPLICABLE IF THE DYNALON HAS BEEN EXPOSED OR SUBJECTED TO CORROSIVE AGENTS, CHEMICALS, OR MECHANICAL ABUSE.

IN THE EVENT THAT THE EFFECTS OF WEATHERING RENDER THE PRODUCT, CONSTRUCTED OF DYNALON, INOPERABLE DUE TO CRACKING, CHECKING, OR ULTRAVIOLET BREAKDOWN, THEN FAIRBORN USA INC., AFTER INSPECTION AND VERIFICATION, WILL FURNISH REPLACEMENT MATERIALS, AT NO COST TO CUSTOMER, TO FIX OR REPAIR AND/OR REPLACE THE INOPERABLE COMPONENTS. FAIRBORN SHALL NOT BE RESPONSIBLE FOR THE ON-SITE LABOR, FREIGHT, LOSS OF USE OR ANY OTHER EXPENSE RELATED TO THE AFOREMENTIONED CLAIM.

The specifications described herein were in effect at the time of printing. However, Fairborn USA reserves the right to change specifications and designs or to discontinue models at any time without incurring obligation.

SERIES 1000L
DOCK SEAL

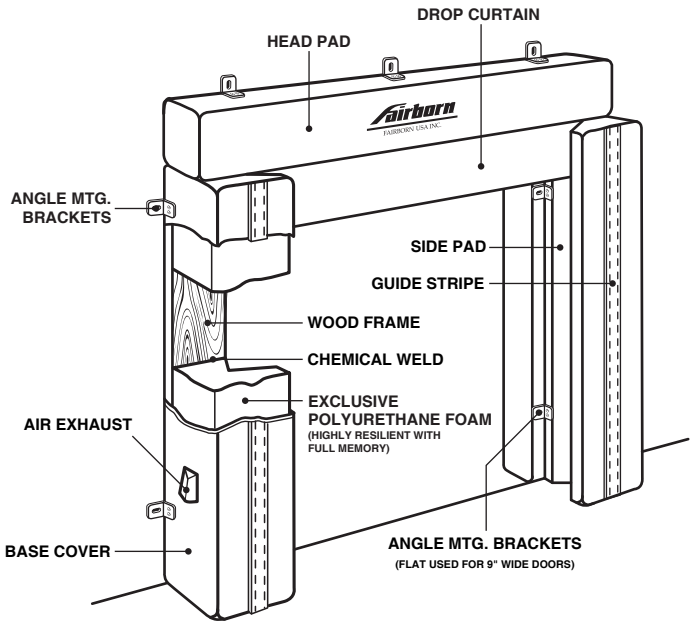

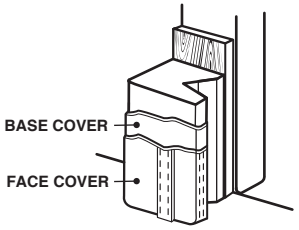

REINFORCED FACE

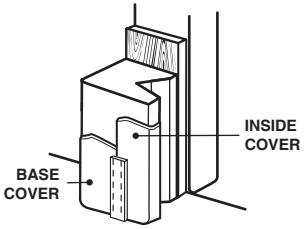

REINFORCED INSIDE

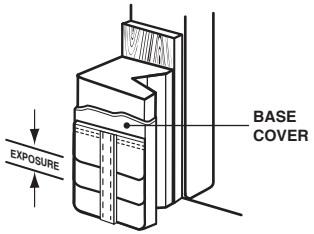

DYNA-ARMOR PLEATS

SIDE PADS

- ☐ 4" EXPOSURE
- ☐ 8" EXPOSURE
- ☐ 16" EXPOSURE

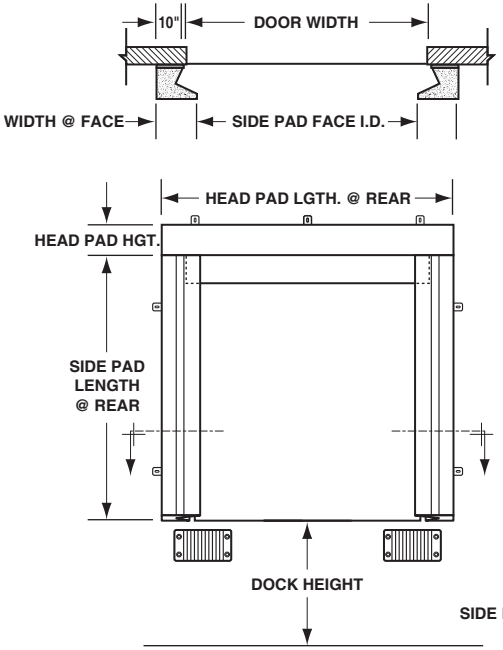

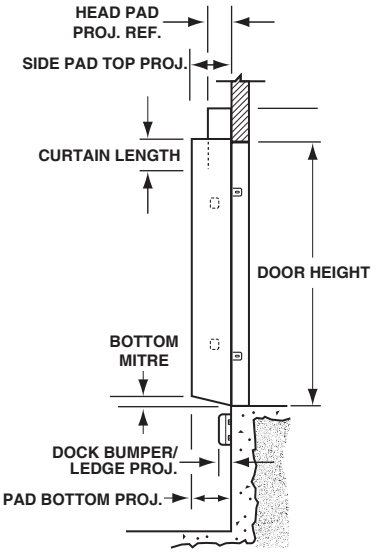

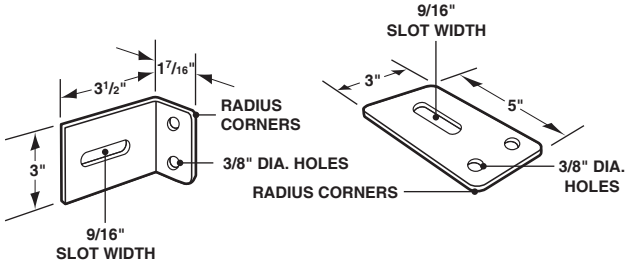

ANGLE AND FLAT MOUNTING BRACKETS

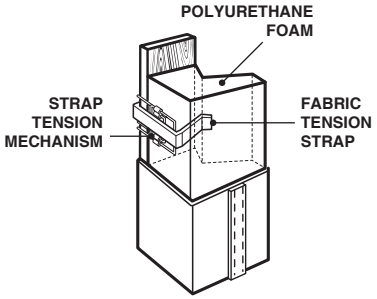

SIDE PAD COVER SUPPORT
(ASSEM. - TYP. 6 PLACES @ PAD)

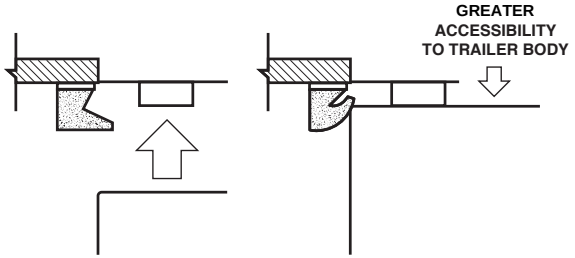

FLEX ACTION OF SIDE PADS SHOWN AS TRAILER BODY ENTERS DOCK

GENERAL INFORMATION

- _____ DOOR WIDTH
- _____ DOOR HEIGHT
- _____ DOCK HEIGHT
- _____ DISTANCE BETWEEN DOORS
- _____ CLEARANCE ABOVE DOOR
- _____ DOCK BUMPER/LEDGE COMBINED PROJECTION

HEAD PAD DATA

- _____ HEIGHT
- _____ LENGTH AT REAR
- _____ CURTAIN LENGTH

SIDE PAD DATA

(RECOMMENDED PROJECTION 10" BEYOND BUMPER; MAX. 30")

- _____ TOP PROJECTION
- _____ BOTTOM PROJECTION
- _____ LENGTH AT REAR
- _____ SIDE PAD FACE I.D.

FABRIC SELECTION

- _____ SIDE PAD BASE
- _____ SIDE PAD FACE REINFORCEMENT
- _____ SIDE PAD INSIDE REINFORCEMENT
- _____ HEAD PAD BASE
- _____ HEAD PAD FACE REINFORCEMENT
- _____ HEAD PAD UNDERSIDE REINFORCEMENT
- _____ DYNA-ARMOR PLEATS

OPTIONS

- ☐ REINFORCED HEAD PAD FACE
- ☐ REINFORCED SIDE PAD FACE
- ☐ REINFORCED INSIDE EDGE SIDE PAD _____" UP FROM BOTTOM
- ☐ REINFORCED UNDERSIDE OF HEAD PAD
- ☐ FORMED STEEL BACK (MIN. 14 GAUGE) ☐ PAINTED ☐ GALVANIZED
- ☐ ROPE/PULLEY SYSTEM
- ☐ TOUCH & HOLD ATTACHMENTS

Fairborn® FAIRBORN USA INC.

P.O. BOX 151 • 205 BROADVIEW STREET
UPPER SANDUSKY, OHIO 43351
800-262-1188 • 419-294-4987 • FAX:419-294-4980
VISIT US AT... WWW.FAIRBORNUSA.COM

JOB:

LOCATION:

CONTRACTOR: ARCHITECT:

APPROVED BY SIGNATURE:

GATEKEEPER GATES

Model 1301
Parking Gate Operator
Arm Lengths to 16 feet

FEATURES

- Heavy duty ball bearings
- Adjustable steel link
- Bench mounted motor
- Safety reverse standard
- Removable electrical control box

SPECIFICATIONS

- 1/3 h.p. Instant reverse motor
- 60 to 1 Heavy duty U.S. made gear reducer
- Zinc plated linkages
- 12 Gauge steel cabinet
- Baked on powder coat finish
- 24 VAC switching
- Compatible with push buttons, card readers, radio controls, loop detectors, etc.
- *Power requirements:* 115VAC, 4 Amps
- *Arm Speed*: 4 seconds per cycle
- *Arm Length*: up to 16 feet
- *Dimensions*: 44"h x 17"w x 17"d
- *Weight*: 220 lbs.

Options:
Thermostatically controlled heater
Aluminum arms
Warning lights
Timer to close gate
Miller safety edge
Vehicle detectors
Preformed detector loops
Radio controls
Card readers
Digital key pads
Mounting pedestal

GATEKEEPER GATES

Model 1301
Parking Gate Operator
Arm Lengths to 16 feet

FEATURES

- Heavy duty ball bearings
- Adjustable steel link
- Bench mounted motor
- Safety reverse standard
- Removable electrical control box

SPECIFICATIONS

- 1/3 h.p. Instant reverse motor
- 60 to 1 Heavy duty U.S. made gear reducer
- Zinc plated linkages
- 12 Gauge steel cabinet
- Baked on powder coat finish
- 24 VAC switching
- Compatible with push buttons, card readers, radio controls, loop detectors, etc.
- *Power requirements:* 115VAC, 4 Amps
- *Arm Speed*: 4 seconds per cycle
- *Arm Length*: up to 16 feet
- *Dimensions*: 44"h x 17"w x 17"d
- *Weight*: 220 lbs.

Options:
Thermostatically controlled heater
Aluminum arms
Warning lights
Timer to close gate
Miller safety edge
Vehicle detectors
Preformed detector loops
Radio controls
Card readers
Digital key pads
Mounting pedestal

GATEKEEPER PRODUCTS

A Division of SMC Inc

OWNER'S MANUAL

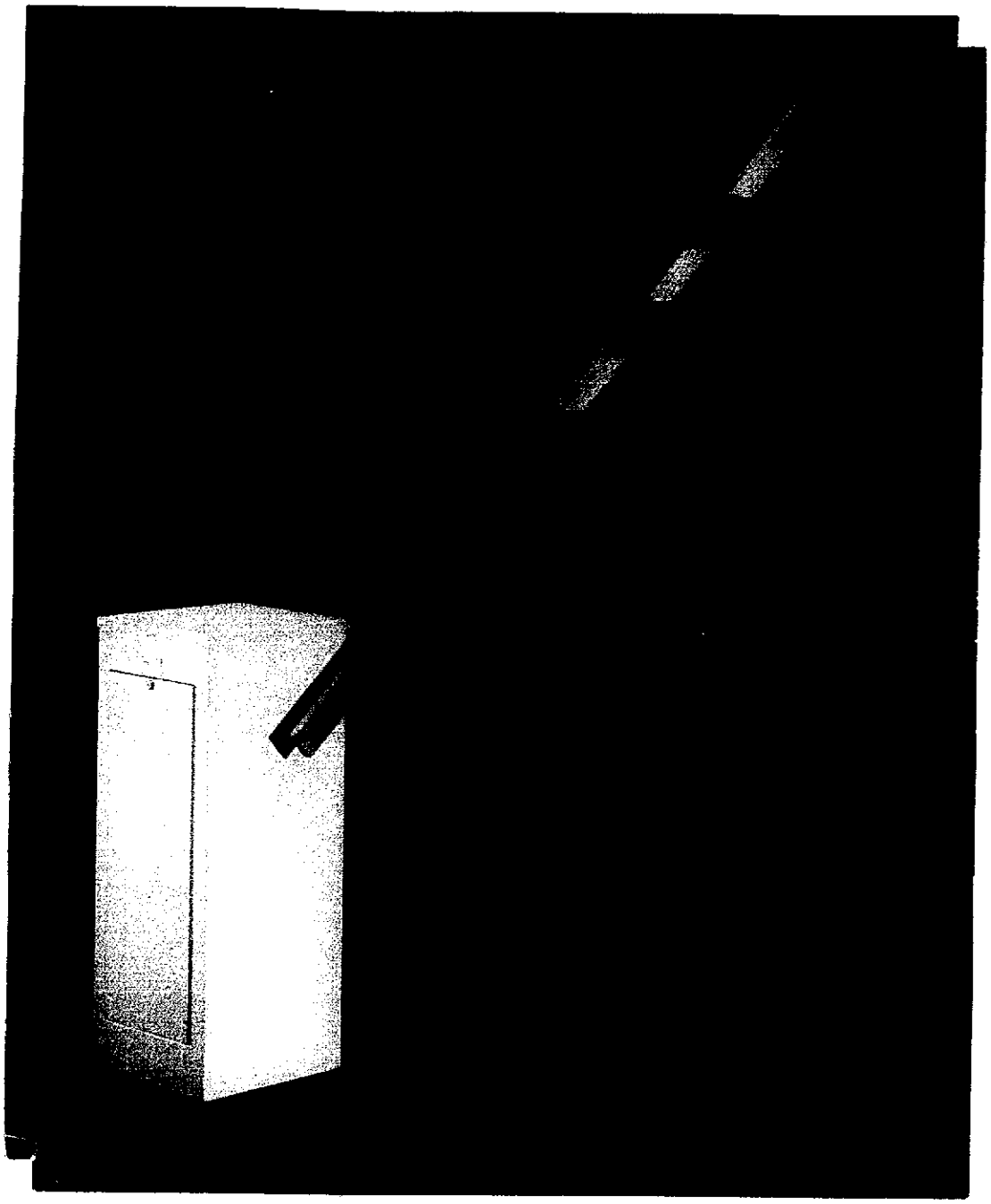

2100 South Oakwood Rd. Oshkosh, WI 54904 920-426-6098 fax:920-426-6083

www.gatekeeper-products.com email: info@gatekeeper-products.com

GATEKEEPER PRODUCTS
A Division of SMC Inc

INDEX

SECTION 1	*HISTORY*
SECTION 2	*PARKING BARRIER GATES*
SECTION 3	*SPECIFICATIONS*
SECTION 4	*OPTIONS*
SECTION 5	*INSTALLATIONS*
SECTION 6	*WIRING OF THE GATEKEEPER OPERATORS*
SECTION 7	*BASE MOUNT*
SECTION 8	*GATE ARM DRAWING*
SECTION 9	*LIMIT ADJUSTMENTS*
SECTION 10	*TROUBLESHOOTING*
SECTION 11	*MAINTENANCE*
SECTION 12	*EMERGENCY OPEN POWER FAILURES*
SECTION 13	*REPLACEMENT PARTS*
WARRANTY	

GATEKEEPER PRODUCTS
A Division of SMC Inc

GATEKEEPER HISTORY

Mayford Geske founded Gatekeeper Products in 1978 under the name Quality Services. Since the beginning, the company has specialized in building only parking gates. The machine has been refined to a level that few products ever reach. Mr. Geske continued to personally sell this operator nationwide until 1995. At this time Mr. Geske chose to retire and sold the company, which was renamed Gatekeeper Products.

Gatekeeper Products, Inc. has carried on the tradition of uncompromised quality, service and customer support. In the fall of 1997 Gatekeeper Products, Inc. was purchased by SMC, Inc. of Oshkosh, WI and has become a division of the metal fabricating and powder coating company. Retaining the existing management of Gatekeeper Products enabled SMC to create a seamless transition with no interruption of service.

The Gatekeeper Products parking gate has assumed a position in the market as a high quality, low maintenance machine offering features not available anywhere else. It is ideal for installations that require the operator to run for years without maintenance. Built to order custom operators are available to allow the end user to fit special or difficult applications. Operators may be ordered with any number or different options.

GATEKEEPER PRODUCTS
A Division of SMC Inc

PARKING BARRIER GATES

A Parking Barrier Gate is a motorized unit that raises a gate arm from horizontal to a vertical position to allow the passage of a motor vehicle. The gates are used for a variety of applications, but they are most commonly used for selective or reserved parking, revenue collection, and controlling traffic.

Belts are used to connect the motor with the pulleys that life the gate arm. The belt-driven gate has four basic parts; the motor, transmission, pulley, and the limit switch. Belt-driven gates are usually priced the least expensive of all gate types and many of these gates are competitively priced and easy to repair.

There are four basic logic designs for the operation of the Gatekeeper Products barrier gate.

SIMPLE LOGIC:

Simple logic is used when the gate is administered by an attendant, or when the gate is used to close off a drive up window, traffic aisle, alleyway, etc. A push button switch or key switch will either open or close the gate. If the button is pushed or the key is turned while the gate is closing, the arm will instantly reverse and return to the open position.

ONE WAY CONTROLLED LOGIC:

With the one-way logic the gate is opened by any of the above-mentioned devices and is closed by a timer and is adjusted from one second to several minutes. As the vehicle drives forward, it will pass a vehicle detection loop buried in the road directly under the arm (this is called a hold loop). The presence of a vehicle over this loop will activate an electronic detector that will prevent the timer from timing out and possibly closing the gate on the vehicle. After the vehicle has cleared the loop, the timer will automatically close the gate at the predetermined time.

ONE WAY FREE LOGIC:

One way free logic is used as an exit for a one-way controlled entrance. A vehicle may exit by driving over a detection loop buried a short distance in front of the gate. This will activate the electronic vehicle detector (open loop) and will open the gate for the passing vehicle. A hold loop is located directly under the arm of the gate and is connected to a second vehicle detector which will prevent the gate arm from closing on the vehicle while the vehicle is present over the top of this loop. When the vehicle has cleared both loops, the timer will close the gate at the predetermined set time. However, if the ate is closing and a vehicle drives over either loop, the gate will return to an open position. Additionally, a vehicle cannot enter from the outside because the hold loop will not open the gate when it is fully closed.

Parking Barrier Gates (continued)...

TWO WAY TRAFFIC-ONE WAY CONTROLLED-ONE WAY FREE:

This logic is used for smaller lots where space conservation is necessary (i.e. parking lots). Usually the entry is controlled and the exit is free. Several of these gates can be used on large lots to enable faster entry and exit. By assigning users to specific gates this can help distribute traffic safely and more evenly.

ADDITIONAL PARKING BARRIER GATE INFORMATION:

Several activating devices can be used on the same gate. A card reader or radio control can be used for regular users, while tokens or coins can be used for guests or visitors. Since gates can have many different automatic controls with the various uses of the gates; there are many choices that owners can choose from. Here are some of the various activating devices that they can use:

Push Button
Card Reader
Key Switch
Radio Control
Ticket Dispenser
Token Acceptor
Coin Accumulator
Photo Cell
Digital Keypad

A typical parking lot will use a controlled entrance and a free exit gate. The entrance gate usually uses some form of activation to open the gate with a hold loop and timer to close the gate after a vehicle has passed the loop. The exit gate on the other hand will use two loops and two vehicle detectors to open until the vehicle has passed the loop.

What works to regulate lot usage for stores, restaurants, and professional offices is to have a free entrance and a token activated exit.

Of course there are many different needs and uses for a barrier or gate system. Our team will be delighted to assist you in designing your parking barrier gate system. Just fax us a description and a sketch of your ideas and we will work with you to choose the right components for your system and the best location to install them.

GATEKEEPER PRODUCTS
A Division of SMC Inc

BARRIER GATES

1201 HEAVY DUTY
Part # 14689-201-000

*DOES NOT INCLUDE SAFETY REVERSE *RECOMMEND MILLER SAFETY EDGE

INDUSTRIAL GATE OPERATOR
THIS MODEL CONTAINS:

- 1/3 H.P. Leeson instant reverse motor
- 60 to 1 Heavy Duty U.S. made gear reducer
- Additional gear reduction with #50 roller chain
- Zinc plated linkages
- 11 Gauge steel cabinet
- 24 vac switching
- Power requirements: 115 vac, 4 amps
- Arm Speed: 10 seconds per cycle
- Dimensions: 44"h x 17"d
- Weight: 240 lbs.
- Baked on powder coated finish (White textured standard)
- Compatible with push buttons, card readers, radio controls, loop detectors, etc.

1301 STANDARD MODEL
Part # 14689-301-000

- 1/3 H.P. Leeson instant reverse motor
- 60 to 1 Heavy Duty U.S. made gear reducer
- Safety Reverse
- Zinc plated linkages
- 11 Gauge steel cabinet
- 24 vac switching
- Power requirements: 115 vac, 4 amp
- Arm Speed: 4 seconds per cycle
- Dimensions: 44"h x 17"d
- Weight: 200 lbs.
- Baked on powder coated finish (White textured standard)
- Compatible with push buttons, card readers, radio controls, loop detectors, etc.

GATEKEEPER PRODUCTS
A Division of SMC Inc

SPECIFICATIONS

DESCRIPTION:	A barrier gate is self-contained automatic arm operator requiring only connection to a 110-volt power source and some form or control switching.
DIMENSIONS OF GATE:	44" X 17" X 17"
WEIGHT:	Approximately 200 lbs.
CABINET:	11 Gauge steel. All corners are welded and finish ground. The top is secured by stainless studs and brass knurled nuts. The door is held closed by a keyed cylinder lock. There are no holes through he cabinet and no exposed fasteners. Four holes are provided in the bottom flange for anchoring the operator to its mounting pad.
FINISH:	A white urethane baked on powder coat, with a textured finish is ultraviolet and scratch resistant and offers an excellent corrosion protection on the gate cabinet.
MOTOR:	A Leeson 1/3 hp. Permanent split phase capacitor with instant reverse motor is used. The motor is made in the USA with a current draw of 6.2 amps at 110-volts, and has a built in thermal overload protector with a manual reset. All internal components are zinc coated for corrosion resistance.
GEAR REDUCER:	Also made in the USA, a Grove Gear cast iron 60-1 gearbox is used.
DRIVE SYSTEM:	A standard V belt and pulleys transfer from the motor to the gear reducer with an adjustable link rod that transfers motion from the gear reducer to the main shaft. This harmonic drive is used to slow the arm travel before it stops in both the open and closed position. The Model 1201 has an additional reduction which uses #50 roller chains.
BEARING:	All bearing are either ball or spherical and have grease fittings. No plain bearings or bushings are used.
SAFETY REVERSE:	This returns the arm to the open position and is standard equipment on all Model 1301 gate operators.

ELECTRICAL: All switches and relays are standard "off the shelf" items with the switching being 24volt. Switching is achieved through relay logic and is resistant to power surges. While, gate arm travel is controlled by limit switches and cams.

DETAILS: All gates are individually built to order and each one is tested before shipment. The color of wooded arms is florescent orange. Aluminum arms with reflective orange and silver stripes are optional.

OPTIONS:
*250 Watt thermostatically controlled heater
*Aluminum arms up to sixteen feet for Model 1301 and up to twenty-six feet for Model 1201.
*Miller Edge safety edge for the gate arm.
*Folding gate arm.
*Warning lights for the arm.
*Reverse rotation arm.
*Reversed cabinet orientation.
*Custom gates are available.

WARRANTY: All gate operators are covers by a 1 year warranty on parts. Only defective parts and normal wear are covered. Damage caused by collisions, lightening, or power surges are not covered.

GATEKEEPER PRODUCTS
A Division of SMC Inc

GATEKEEPER OPTIONS

POWER COATING
A cabinet baked on powder coating is done to the Gatekeeper cabinets. Not only is this paint finish chip and VU resistant, also it will keep the unit from corroding for years. White textured is the standard; however, special paint colors are optional such as Safety Yellow.

THERMOSTATICALLY CONTROLLED HEATER
Assures proper and additional protection against cold and damp weather. This 250-watt heater prevents oil from gelling in the gear reducer during colder months.

TIMER ASSEMBLY
The timer circuit instructs the gate operator to close after remaining open a preset time.

WARNING LIGHT
A red flashing light located near the end of the gate arm is a great safety feature for the gate arm while the arm is in use.

MILLER EDGE KIT
This is the most positive energy stopping device available for the motor-driven doors and gates. It provides the most sensitive, fast acting-reversing signal available.

How does it work?
When touch-activated, the soft foam cushion inside the sensing edge compresses, causing the internal contact elements to meet and immediately send an electrical signal to stop or reverse the motor, eliminating any severe damages to vehicles or pedestrians.
Miller Edge mounting channel is pop riveted to the bottom of an aluminum arm. The Miller Edge is placed on the arm by sliding into a mounting channel. The Miller Edge is generally two feet shorter than the gate arm length. (An aluminum arm is measured from the centerline of the mounting shaft to the end of the arm.) For example, a sixteen foot aluminum arm takes fourteen feet of the Miller Edge.

LOOP DETECTOR
This electronic device will detect the presence of any metal vehicle. The detection is accomplished by the passage of the vehicle over a wire loop imbedded in the roadway. Vehicle loop detectors are a critical part of most revenue control systems in use today. Here are some factors that should be considered upon deciding on the loop detector system:

- Correct selection of size and shape of loops
- Correct loop material
- Best available electronic senor unit

ACCESS OPTIONS:

RADIO CONTROLS	Wireless transmitters that signal a receiver in the operating booth to operate the gate.
CARD READERS	Used to read a card with a magnetic strip upon entering and when verified it signals the operator to cycle.
KEYPAD	A numbered keypad is used to enter a security code. When code is verified it signals the operator to cycle.
KEY SWITCH	Turning a key in a lock cylinder closes a switch, which in turn signals the operator to cycle.

SAFETY EDGE WIRING

WARNING!

BE SURE THE POWER TO THE OPERATOR IS DISCONNECTED BEFORE ATTEMPTING ANY SERVICE.

The wire from the safety edge is routed into the cabinet by placing it in the keyway in the main shaft. It is important that this wire is passed all the way through the ball bearing inside the cabinet. This wire should be wrapped around the shaft twice and then routed with the other wires to the relay box. The wire is then connected to the #10 and the #12 terminals. After the arm is installed, a cable tie should be tightened around the main shaft between the arm and the cabinet to prevent the wire from rubbing on the cabinet.
NOTE It is the installers' duty to test the safety edge for proper operation after making the above connections.

HEATING ASSEMBLY
The heating assembly will come installed in your unit. Set the thermostat at the lowest setting during cold weather. The heater should be turned off during warm weather.

VEHICLE DETECTORS
The vehicle detectors should be connected to the leads inside the gate cabinet marked loop. The detector should be hung on the hook on the left side of the cabinet.

PERFORMED FLIEXIBLE CONDUIT LOOP

INTSTALLATION TIPS

The flexible conduit loop was designed for use in new construction of gravel roadways. The conduit is ribbed non-metallic material providing full protection for the loop contained within.

PREPARATION FOR PAVING OVER

1. Flex conduit into a rectangle shape of the size order.
2. Choose proper location of loop and place loop on ground, keeping the "T" and lead in wire closest to the operator.
3. Cover with a light coating of sand, dirt, or gravel.
4. Protect lead in wire by means of additional length of 1/2" flexible conduit or rigid conduit of non-metallic material. This lead in conduit should also be covered by sand, dirt, or gravel, wherever black top would make conduit.

*PREPARATION FOR CONTRETE**

1. Follow steps 1-3 above.
2. Do not lay loop directly on rebar or wire mesh. Maintain a minimum of three inches from any metal.
3. When installing over rebar or wire mesh, use non-metallic stakes to suspend loop over any metal reinforcement.

*NOTE: You may opt. to wait until cement is poured to float loop into cement maintaining a minimum of three inches from metal reinforcements.

LIMIT SWITCHES

All units do not have two micro switches on each side. The number of switches depends on the type of circuitry needed.

The gate limit switches release to shut off motor in both directions of run. We do this because a micro switch is more constant on release (break) than on activate (make). To properly adjust the space between the micro switch roller and the shaft, lift the roller arm until the switch makes. Slowly lower arm until the switch breaks. At that point you should have some space between the roller and shaft, but no more than 1/8". When you have two switches the switch against the mounting bracket is operated by a cam that has a notch. This breaks that switch before the adjacent switch breaks.

GATEKEEPER PRODUCTS
A Division of SMC Inc

GENERAL INSTALLATION FOR THE GATE OPERATORS

WARNING: *Caution- Be sure to unplug the gate operator before attempting any type of service. This will prevent accidental start up. Serious injury could result if this precaution is not followed.*

LOCATION: It is very important that the gate operator is positioned correctly in order for the gate to operate correctly. The cabinet has two signs attached that indicate which side must face the traffic lane and which way the arm must swing. These signs must be followed or that gate will not operate correctly.

MOUNTING: The gate operator must be securely bolted to its concrete mounting pad. The concrete pad must be at least 20 x 20 inches and should extend below the frost line. All electrical conduits should be in the center of the pad. Center the operator on the pad and mark the mounting holes. Use 1/2 inch anchor bolts to secure the operator to the pad. Use the foot print diagram provided to locate the anchor bolts (use appropriately sized anchor bolts). SEE ATTACHED DIAGRAM IN SECTION 7.

SET-UP: the operator has been shipped in the closed position. The arm should be attached to line up with the arrow on the arm adapter. If the arm is not installed in the correct position, the gate will not operator properly. The electrical box should be hung during operation using the hook on the top of the box and the hole on the right side of the motor shelf.

WEHICLE DETECTORS: the vehicle detector loops should be connected to the leads inside the gate marked loop. The detector should be hung on the hook on the left side of the cabinet.

MOTOR RESET: the motor is equipped with a thermal limit. If the gate fails to operate, check the thermal limit first. The reset button is on the back of the motor. *Be sure to unplug the operator before attempting to reset the motor.*

ADJUSTMENTS: final adjustments to level the arm is made by loosing the clamp on the plastic limit cam and moving the cam slightly. The switch marked OL controls the open limit and the switch marked CL controls the closed. No other adjustments should be necessary.

POWER: power is supplied to the operator by simply plugging it in a 110-volt outlet. This will also supply power to the radio receiver. The heater, if so equipped, also plugs into the same outlet.

HELP: for further information call Gatekeeper Products at (920) 426-6098, from 8 a.m. to 4:30 p.m. central time.

GATEKEEPER PRODUCTS
A Division of SMC Inc

WIRE OF THE GATE OPERATORS

IMPORTANT: PLEASE DETERMINE WHICH MODEL OF THE GATE OPERATOR YOU HAVE BEFORE ANY WIRING IS DONE! THE MODEL DESGNATION IS LOCATED ON THE TOP EDGE OF THE CABINET AND IS MADE VISIBLE BY REMOVING THE TOP OF THE CABINET.

WIRING INSTRUCTIONS FOR MODEL 1301M GATE OPERATOR

Wiring- If a push button is needed; connect it to the number 3 and the number 6 terminal inside the electrical box. The radio receiver has been installed at the factory and requires no additional connections. During operation, the electrical box should be hung from the hole on the right side of the shelf using the hook on the top of the box.

WIRING INSTRUCTIONS FOR MODEL 1301 GATE OPERATOR

Wiring- For two push button operation use terminals 4 and 12 to open and 4 and 6 to close. if a stop button is required, remove the jumper wire between 2 and 4 and install the stop switch across these two terminals. For single button or card reader operation use terminals 4 and 5. During operation, the electrical box should be hung for the hole on the right side of the shelf using the hook on top of the box.

INSTALLATION INSTRUCTIONS FOR 1301 MASTER/SLAVE GATE OPERATOR

Both operators have been shipped I the closed position. The master operator is designed to be installed on the right side of the entrance as you are entering. The slave is installed on the right side of the entrance as you are entering. The slave is installed on the opposite side. In both cases, the arm must be on the entrance side of the operator.
The terminals in the master numbered 1,4,6, and 12 must be connected to the corresponding terminals in the slave.
For two button operation use terminals 4 and 12 to open 4 and 6 to close.
For single button or radio control use numbers 4 and 5.
During operation, the electrical box should be hung from the hole on the right side of the shelf using the hook on top of the box.

GATEKEEPER PRODUCTS
A Division of SMC Inc

BASE MOUNTING

In lieu of digging a 20" x 20" hole to or below the frost line the pinning method shown below has been proved to be very stable. Electrical conduit should be within a 12" square in center of the top as shown in the enclosed drawing.

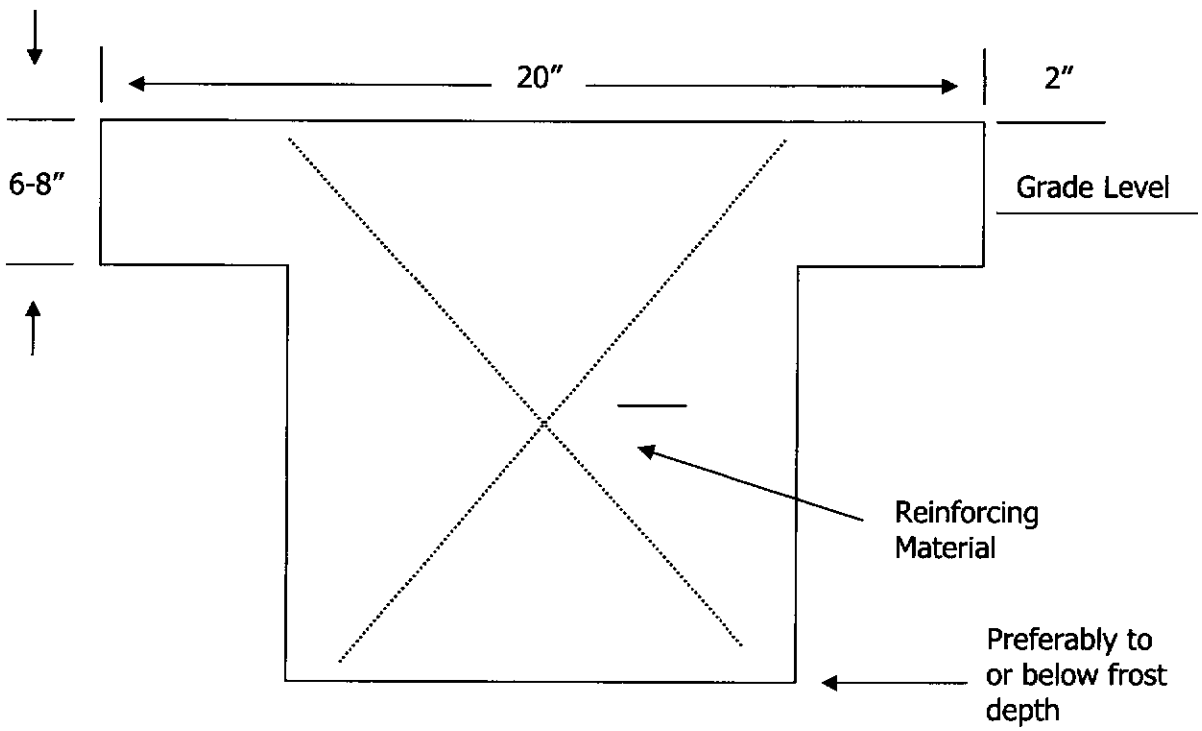

Dashed lines indicate base of cabinet. Electrical, vehicle loop detector loop wires, push button, and any other conduit must be within the 12" x 12" center opening. For easiest mounting set operator in place, mark and drill holes and anchor with raw anchors.

GATEKEEPER PRODUCTS
A Division of SMC Inc

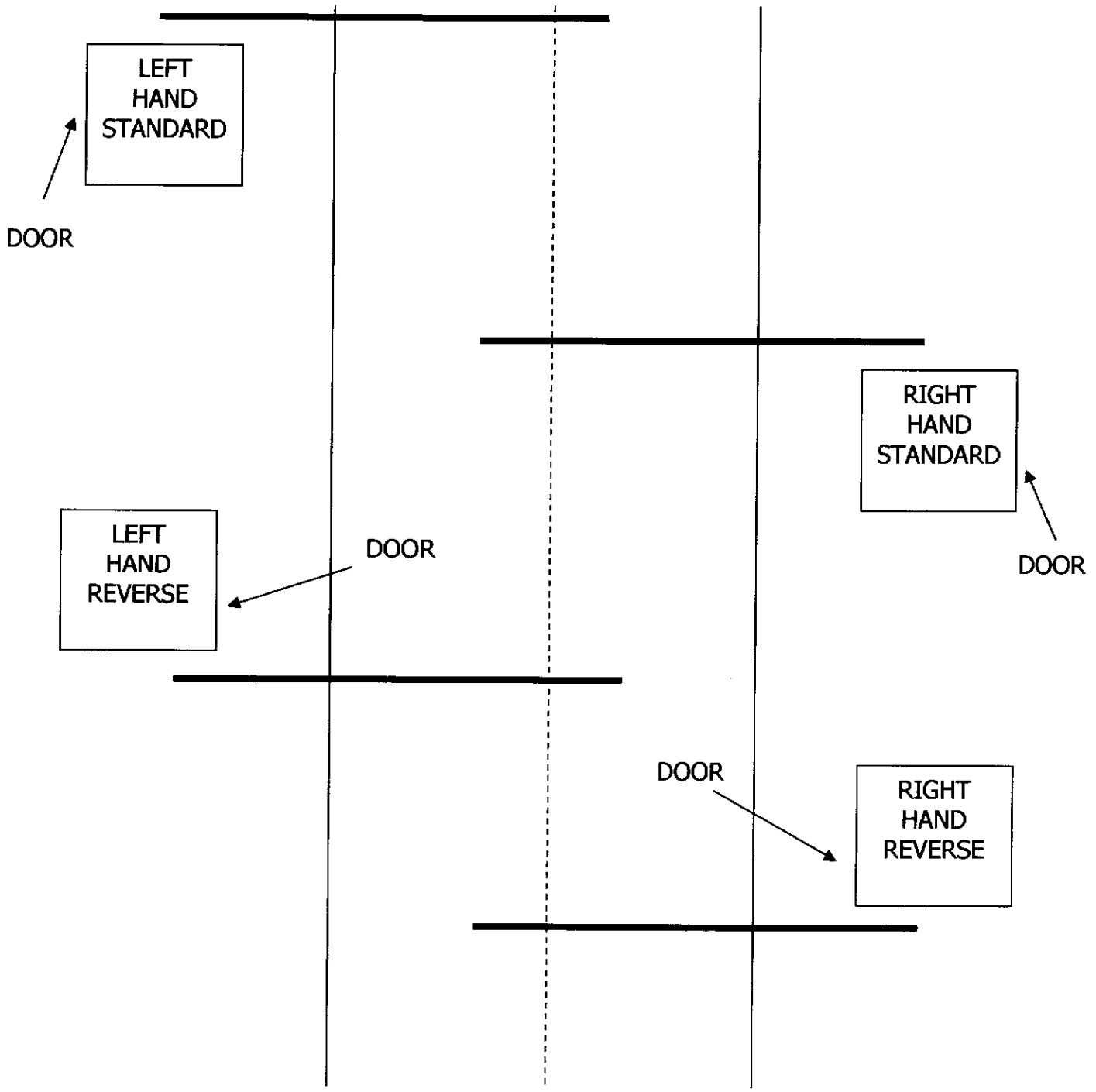

GATEKEEPER PRODUCTS
A Division of SMC Inc

LIMIT ADJUSTMENTS

WARNING!

BE SURE THE POWER TO THE OPERATOR IS DISCONNECTED BEFORE ATTEMPTING ANY SERVICE.

BEFORE ADJUSTING LIMIT CAMS, BE SURE THE POWER IS DISCONNECTED.

NOTE: AFTER ANY LIMIT SWITCH ADJUSTMENTS MAKE SURE ALL THE FASTENERS ARE TIGHT. TURN ON THE POWER AND TEST OPERATION BY USING THE OPEN/CLOSE SWITCH.

ADJUSTMENTS:

The gate switches release to shut off motor in both directions of run. To properly adjust the space between the micro roller and the shaft, first rotate the cam so it is not touching the switch roller. Then lift the roller arm until the switch makes (clicks). Slowly lower the arm until the switch breaks (clicks). At that point, you should have approximately 1/16 to 3/32 of an inch position. When you have two switches side by side, the switch against the mounting bracket will fall into a notch on the cam. This breaks that switch before the adjacent switch breaks.

Final adjustments to level the arm and to stop the arm in a vertical position are made by loosening the clamp on the plastic limit cam and moving the cam slightly. The switch marked OL controls the open limit and the switch marked CL controls the closed limit. No other adjustments should be necessary.

GATEKEEPER PRODUCTS
A Division of SMC Inc

TROUBLE SHOOTING

WARNING!

BE SURE THE POWER TO THE OPERATOR IS DISCONNECTED BEFORE ATTEMPTING ANY SERVICE.

In the event your gate should fail to operate, carefully make the following checks:

- ✓ Check the main power supply, fuses and circuit breakers. Make sure the operator is plugged in.
- ✓ Check the motor circuit breaker located at the back of the motor. Press the button in firmly. You should hear and feel the reset button click.
- ✓ Be sure the operator is unplugged and main power source is off. Check all wiring connections in the electrical box. Make sure that all of the wires are connected and anchored under the screws and that all of the screws and terminals are tight. Check the fuse in the panel. Also, check to make sure that all the connectors are tight on the limit switches.
- ✓ Check for broken wires.

If the gate are goes up and down without stopping, check the following:

- ✓ Check the open limit switch for proper adjustment and operation.

If the limit switches are properly adjusted and the gate continues to run up and down without stopping, you have a faulty limit switch and an immediate replacement should be requested from the factory.

MAINTENANCE

Belt tension should be checked every 90 days.

Bearings and rod ends should be lubricated on a regular basis.

It is recommended that the heater assembly, if so equipped, be turned to the of position in the warmer months.

GATEKEEPER PRODUCTS
A Division of SMC Inc

EMERGENCY OPENING-POWER FAILURE

WARNING!

BE SURE THE POWER TO THE OPERATOR IS DISCONNECTED BEFORE ATTEMPTING ANY SERVICE.

Open the cabinet door and unplug the gate operator. To move the gate arm into the desired position, slip the manual crank over the gearbox shaft and engage the crank in the pulley spokes. Carefully turn the crank until the arm is in the desired position. Immediately remove the manual crank.

WARNING!

THE CRANK MUST BE REMOVED BEFORE POWER IS RESTORED TO THE GATE OR SERIOUS DAMAGE COULD RESULT.

GATEKEEPER PRODUCTS
A Division of SMC Inc

REPLACEMENT PARTS

14689-503-000	TIMER ASSEMBLY
14689-601-400	REPLACEMENT 12' WOODEN ARM
14689-610-005	COUNTERWEIGHTS
14689-620-401	10' ALUMINUM ARM KIT
14689-621-401	12' ALUMINUM ARM KIT
14689-622-401	14' ALUMINUM ARM KIT
14689-623-401	15' ALUMINUM ARM KIT
90516-001-000	SNAP ACTION SWITCH
90516-002-000	RELAY
90516-003-000	HEATER
90516-004-000	THERMOSTAT
90516-005-000	ELECTRICAL CORD
90516-007-000	VEE BELT
90516-008-000	SMALL SHEAVE- PULLEY
90516-009-000	LARGE SHEAVE- PULLEY
90516-010-000	FUSE- AGC 3/4
90516-011-000	MASTER/SLAVE TRANSFORMER
90516-012-000	TIMER RELAY
90516-013-000	FUSE HOLDER
90516-014-000	TOGGEL SWITCH
90516-024-000	TRANSFORMER
90516-025-000	CHICAGO LOCK SERIES 99097
90516-026-000	MOTOR, 1/3 HP
90516-027-000	GEAR REDUCER, WITH LONG SHAFT (1201)
90516-028-000	WHITE DOME CAP
90516-029-000	RIGHT HAND ROD END

REPLACEMENT PARTS... (CONTINUED)

90516-030-000	LEFT HAND ROD END
90516-033-000	BEARING WITH 4 BOLT FLANGE
90516-036-000	NAME PLATE
90516-037-000	REFLECTIVE TAPE 3" X 50 YRDS.
90516-038-000	DIE SPRING 1/2 X 2"
90516-039-000	TIMER
90516-040-000	VEHICLE DETECTOR
90516-044-000	SHAFT COLLAR
90516-045-000	1/4-20 BRASS KNURLED NUT
90516-086-000	MILLER EDGE
90516-087-000	MILLER EDGE- MOUNTING CHANNEL
90516-090-000	RADIO TRANSMITTER
90516-091-000	ADJUSTABLE TIMER
90516-097-000	WARNING LIGHTS FOR ARM
90516-101-000	PUSH BUTTON STATION- INTERIOR
90516-104-000	STOP SIGN 12" X 12"
90516-122-000	GEAR REDUCER WITH CUT SHAFT (1301)
90516-128-000	RADIO RECEIVER

GATEKEEPER PRODUCTS

A Division of SMC Inc

WARRANTY

Gatekeeper Products provides a one-year warranty against all defects in materials or workmanship. Defective materials will be replaced with new materials furnished by the manufacturer, at no cost to the owner for up to one year from the purchase date. This includes damage caused by normal wear. Damage caused by collisions, lightening, power surges or physical damage is not covered under the warranty. The gate arm itself is also not covered under warranty. Gatekeeper Products reserves the right to change specifications and designs without notice, and assures no responsibility for making these modifications on any equipment previously sold.

Industrial Air

AIR COMPRESSOR

60 Gallon Hi-Flo - Single Stage - Cast Iron

FEATURES & BENEFITS

- High air flow, single stage - 14 CFM @ 90 PSI
- Cast iron, three cylinder, oil lubricated pump features
  - One-piece cast iron crankcase
  - Full cast iron cylinder body
  - Durable Swedish stainless steel flex leaf valves
  - Oil level sight glass
  - Easily accessible oil fill
  - 12" cast iron balanced flywheel
  - Large intake filter/silencers
- Heavy duty, 240 volt induction motor for maximum performance and efficiency
- 155 PSI max pressure for optimum tool performance
- Large capacity, 60 gallon ASME* air receiver provides more air for longer run times on air tools such as ratchets, impacts, spray guns, hammers, etc
- Full metal belt guard
- Shipped with synthetic oil for optimum performance and long life
- Supported by our Toll Free Customer Help Line

MODEL SPECIFICATIONS

Tank Size:	60 Gallon ASME*
Maximum Pressure:	155 PSI
CFM @ 40 PSI:	16.1
CFM @ 90 PSI:	14.0
Voltage:	240 Volt
Running HP:	4.7
Certifications:	UL & CSA
Warranty:	2 Year Limited

Dimensions: 38" x 29" x 76" • Weight: 250 lbs. • UPC: 8-46212-00157 8 • Pallet Qty: 1 • Truckload Qty: 54 (53' trailer)

*ASME - American Society of Mechanical Engineers Product style and configuration may vary.

MODEL: ILA4546065

©2010 SANBORN MF

SANBORN

60 Gallon Cast Iron - Oil Lubricated - Belt Drive

FEATURES & BENEFITS

- Cast iron twin cylinder pump features
  - One-piece cast iron crankcase
  - Thermally stable cast iron cylinder body
  - Aluminum head and valve plate
  - Automotive style ball bearings
  - Durable Swedish stainless steel reed valves
  - Oil level sight glass
  - Easily accessible oil fill
  - 12" cast iron balanced flywheel
- Heavy duty induction motor for maximum performance and efficiency
- Large capacity, 60 gallon ASME* air receiver provides more air for longer run times on air tools such as ratchets, impacts, spray guns, hammers, etc.
- Spread voltage motor allows unit to operate on 208 or 240 volt without any wiring changes
- Shipped with synthetic oil for optimum performance and long life
- Equipped with pressure gauge and on/off switch
- Supported by our Toll Free Customer Help Line

MODEL SPECIFICATIONS

Tank Size:	60 Gallon ASME*
Maximum Pressure:	135 PSI
CFM @ 40 PSI:	13.4
CFM @ 90 PSI:	11.5
Voltage:	208-240 Volt
Running HP:	3.7
Certifications:	UL & CSA
Warranty:	2 Year Limited

Dimensions: 30" x 27" x 68" • Weight: 247 lbs. • UPC: TBD

*ASME – American Society of Mechanical Engineers Product style and configuration may vary.

MODEL: SL3706056

©2008 SANBORN MFG. ALL RIGHTS RESERVED

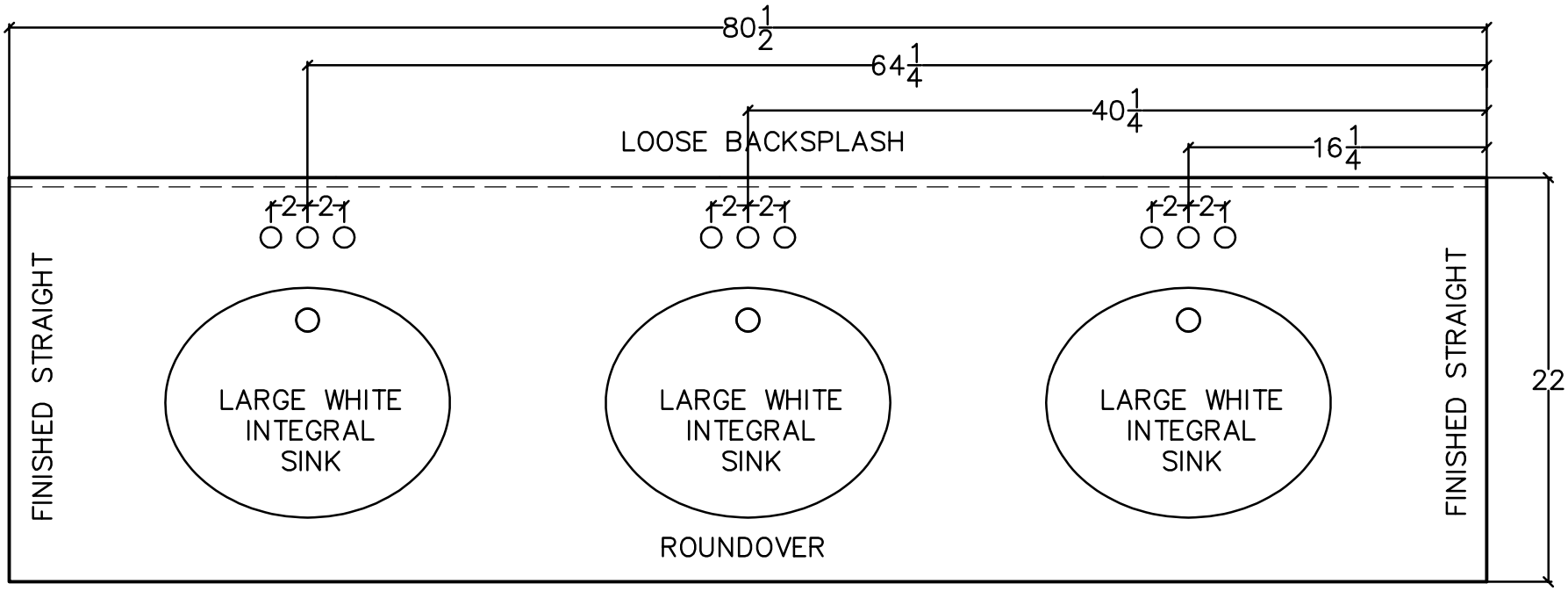

COLOR = MIST
PROFILE = ROUNDOVER
LARGE WHITE VANITY SINK – 3
FAUCET = 4" CENTER SET (2" BETWEEN EACH HOLE)

Countertops Inc.	6111 ALTER RD. EAU CLAIRE , WI 54703 PH. (715)876-6744 FAX (715)876-6743	DRAWING NAME X	SCALE X	REF. X	
			DRAWN BY JDH	SHEET NO. 1	
			DATE X		

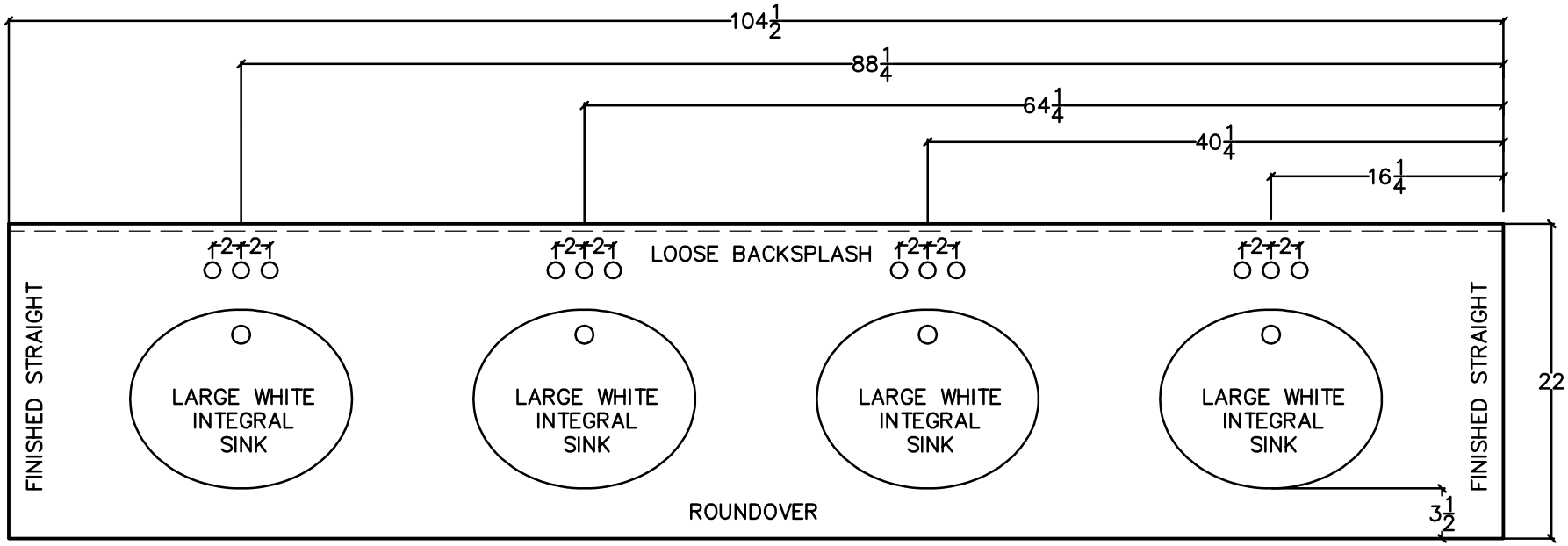

COLOR = MIST
PROFILE = ROUNDOVER
LARGE WHITE VANITY SINK – 4
FAUCET = 4" CENTER SET (2" BETWEEN EACH HOLE)

Countertops Inc.	6111 ALTER RD. EAU CLAIRE , WI 54703 PH. (715)876-6744 FAX (715)876-6743	DRAWING NAME X	SCALE X	REF. X
			DRAWN BY JDH	SHEET NO. 1
			DATE X	

NEU-WATERFALL™

6523

Drinking Fountain
Vitreous China

FEATURES

- ***6523 Neu-Waterfall™***

  6523 Neu-Waterfall™ vitreous china wall-mounted drinking fountain with 6 5/8" high back, elevated bubbler base, integral strainer, and concealed hanger. Less trim.

  Trim: *Trimmed with supply tting consisting of: Pur o angle stream bubbler, automatic stream regulator, push button self-closing valve screwdriver stop with access cover plate. Less trim.*

  Trap: *8-5684 cast brass female "P" trap (1 1/4" I.P.S.) with clean-out plug. (installed on unit). Less trap.*

NOTES

- *Fixture dimensions conform to ANSI/ASME A112.19.2M standard.*

CRANE
PLUMBING
Universal-Rundle

CR/PL© 12/02 Printed in U.S.A.

NEU-WATERFALL™

6523

Vitreous China Drinking Fountain

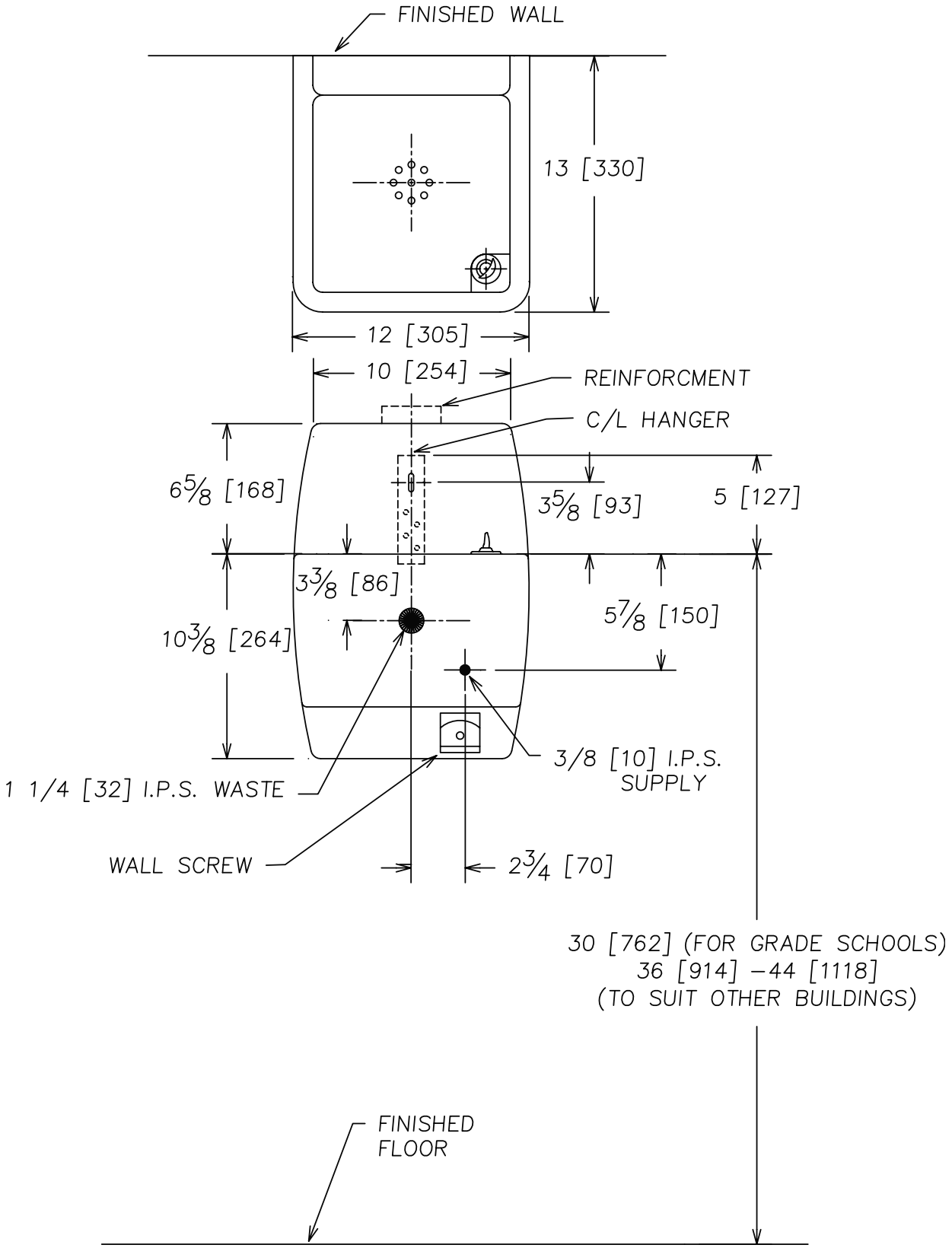

CRANE PLUMBING
Universal-Rundle

IMPORTANT: Roughing-in dimensions may vary ½" and are subject to change or cancellation without prior notice.
No responsibility is assumed for use of superseded or voided leaflets.

CR/PL© 12/02 Printed in U.S.A.

SUBMITTAL

Job Title: **Menards Fans**

Consultant: Carl
Contractor: Menards
Elevation: (ft) 869
Date: 03/26/14
Submitted By: Jason Kuehne

TMS JOHNSON INC
2908 NEVADA AVE N
NEW HOPE , MN 55427-2809
US
Phone: (763)544-5442
Fax: (763)544-5569
Email Address: jeffg@tmsj.com

GREENHECK
Building Value in Air.
P.O. Box 410 Schofield, WI 54476 (715) 359-6171 FAX (715) 355-2399 www.greenheck.com

Model: G-133-A

Direct Drive Centrifugal Roof Exhaust Fan

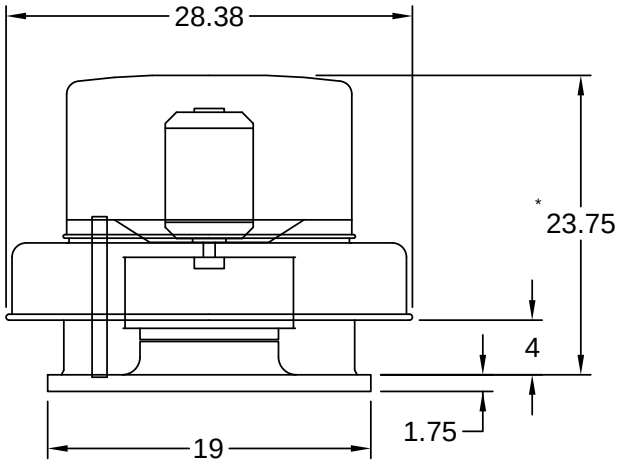

Reference assembly view drawings for actual dimensions with mounted accessories

*Overall height may be greater depending on motor

Dimensional	
Quantity	1
Weight w/o Acc's (lb)	58
Weight w/ Acc's (lb)	84
Max T Motor Frame Size	56
Roof Opening (in.)	14.5 x 14.5

Performance	
Requested Volume (CFM)	2,281
Actual Volume (CFM)	2,276
External SP (in. wg)	0.375
Total SP (in. wg)	0.373
Fan RPM	1725
Operating Power (hp)	0.53
Elevation (ft)	869
Airstream Temp.(F)	70
Air Density (ft3)	0.073
Tip Speed (ft/min)	5,927
Static Eff. (%)	25

Motor	
Motor Mounted	Yes
Size (hp)	1/2
V/C/P	115/60/1
Enclosure	ODP
Motor RPM	1725
Windings	1
NEC FLA* (Amps)	9.8

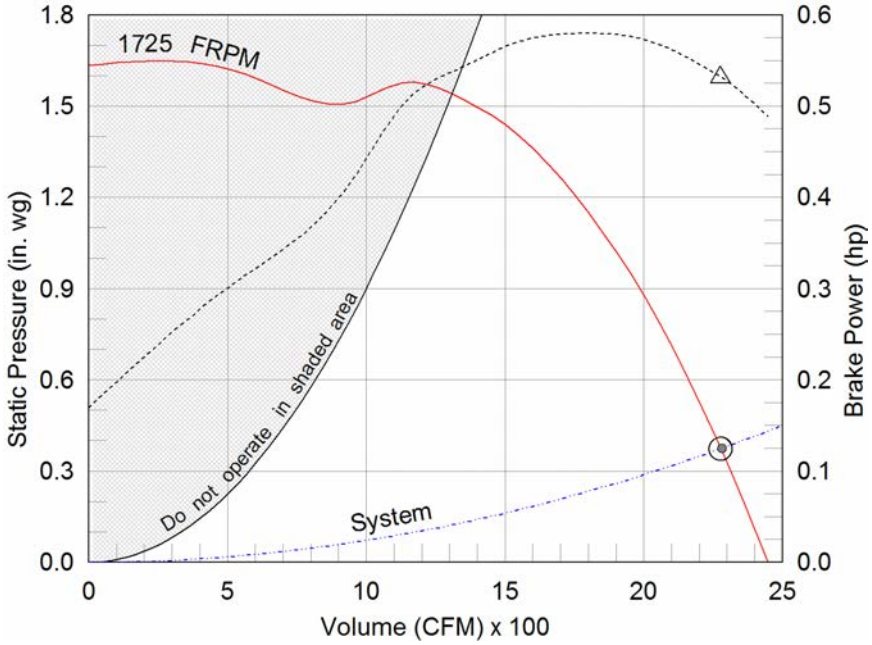

Operating Bhp point
Operating point at Total SP
Operating point at External SP
Fan curve
System curve
Brake horsepower curve

External SP	0.375	in. wg
Direct Drive RPM Adjustment	-0.002	in. wg
Total SP	0.373	in. wg

Sound Power by Octave Band

Sound Data	62.5	125	250	500	1000	2000	4000	8000	LwA	dBA	Sones
Inlet	79	81	81	79	72	70	67	64	80	68	16.5

Notes:

All dimensions shown are in units of in..
*FLA - based on tables 150 or 148 of National Electrical Code 2002. Actual motor FLA may vary, for sizing thermal overload, consult factory.
LwA - A weighted sound power level, based on ANSI S1.4
dBA - A weighted sound pressure level, based on 11.5 dB attenuation per Octave band at 5.0 ft - dBA levels are not licensed by AMCA International
Sones - calculated using AMCA 301 at 5.0 ft

Model: G-133-A

Direct Drive Centrifugal Roof Exhaust Fan

Standard Construction Features:

- Aluminum housing - Backward inclined wheel - Aluminum curb cap with prepunched mounting holes - Birdscreen - Ball bearing motors (sizes 100-180), sleeve bearing motors (sizes 60-95) - Motor isolated on shock mounts - Corrosion resistant fasteners.

Options & Accessories:

Motor with Thermal Overload
UL/cUL 705 Listed - "Power Ventilators"
Roof Curb-Galv., GPI-19-G18, Under Sized 1.5 in. Total
Unit Warranty: 1 Yr (Standard)

Assembly Drawing

Type: Direct Drive Centrifugal Roof Exhaust Fan

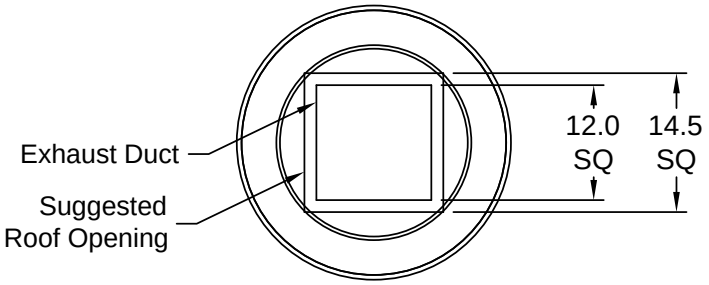

TOP VIEW

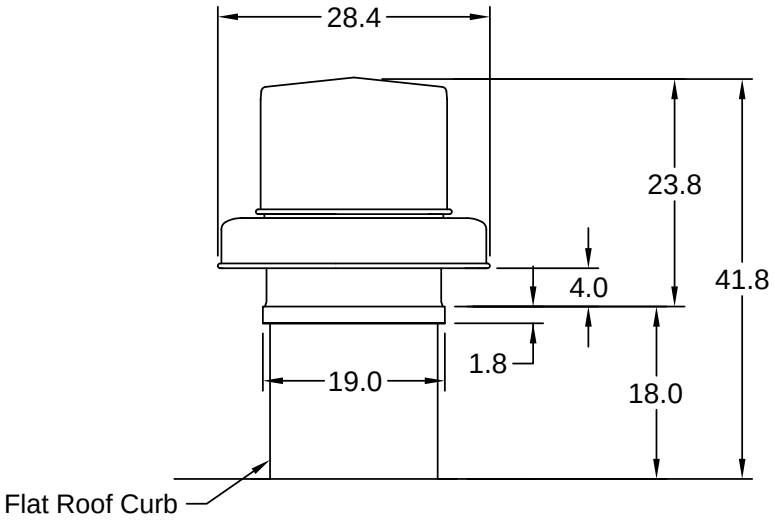

FRONT VIEW

Notes: All dimensions shown are in units of in..

Roof Curb

Model: GPI

Material: Galvanized

Standard Construction Features:

- Roof Curb fits between the building roof and the fan mounted directly to the roof support structure - Constructed of either 18 ga galvanized steel or 0.064 in. aluminum - Straight Sided without a cant - 2 in. mounting flange - 1 in. thick 3 lb density insulation - Height - Available from 8 in. to 42 in. as specified in 0.5 in. increments.

Notes:
- The Maximum roof opening dimension should not be greater than the "Actual" top outside dimension minus 2 in..
- The minimum roof opening dimension should be at least 2.5 in. more than the damper dimension or recommended duct size.
- The Roof Opening Dimension may NOT be the Structural Opening Dimension.
- Damper Tray is optional and must be specified. Tray size is same as damper size.
- Security bars are optional and must be specified. Frames and gridwork are all 10 ga steel. Gridwork is welded to the frame and the frame is welded to the curb. To prevent corrosion, they are coated with Greenheck's high performance Permatector coating.

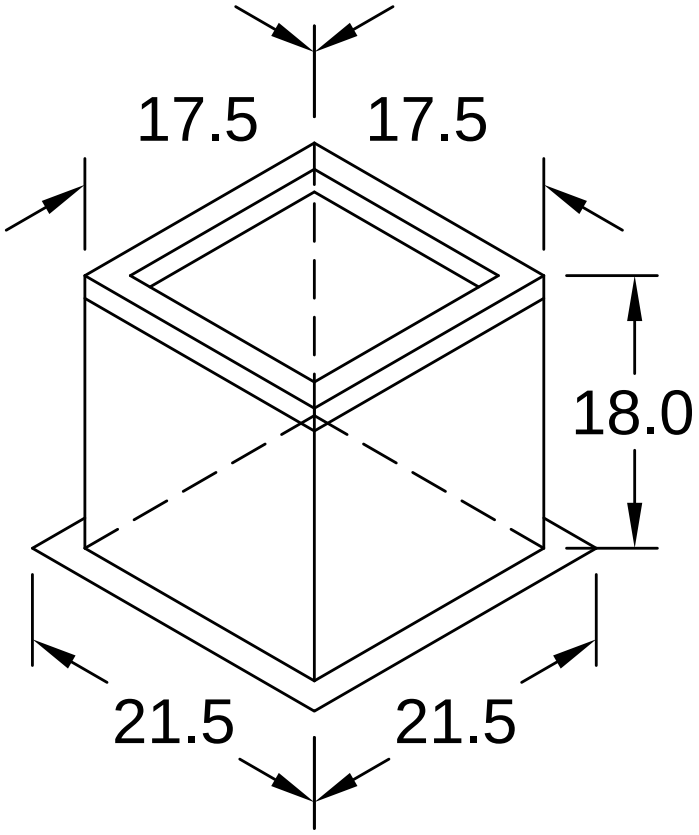

ISOMETRIC VIEW

Notes: All dimensions shown are in units of in.

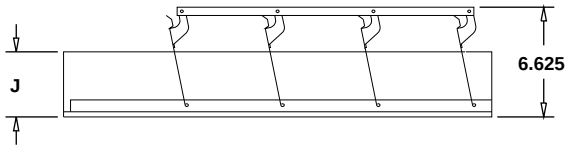

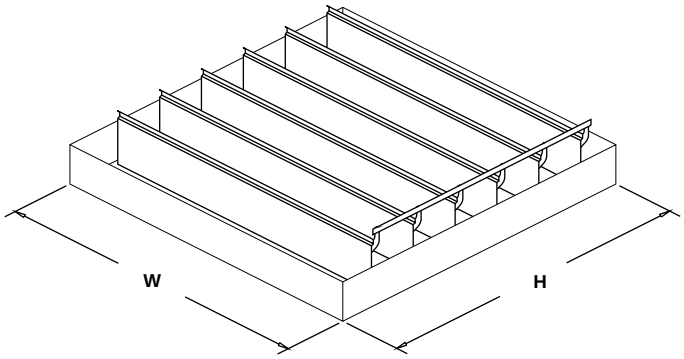

WD-100

Horizontal Mount Exhaust Damper

Application & Design

The model WD-100 is a horizontal mount, flangeless, backdraft damper designed to allow vertical ariflow up and prevent reverse airflow. The dampers are opened by air pressure differential (assisted by springs and closed by gravity). Optional motorpack converts the dampers to motorized operation.

RATINGS
Maximum Pressure: 1 in. wg
Maximum Velocity: 2,500 ft/min
Maximum Temperature: 180.0 F.

Installation instructions available at www.greenheck.com.

Notes: All dimensions shown are in units of inches.

W & H furnished approximately 0.125 in. undersize.

CONSTRUCTION FEATURES

Frame Material:	Galvanized	**Axle Bearings:**	Synthetic
Axle Material:	Steel	**Sizing:**	Nominal

ID #	Tag	Qty	W (in.)	H (in.)	J-Dim. (in.)
1-1	EF-1	1	16.000	16.000	2.5
Tags: EF-1					

Model: G-133-A

Direct Drive Centrifugal Roof Exhaust Fan

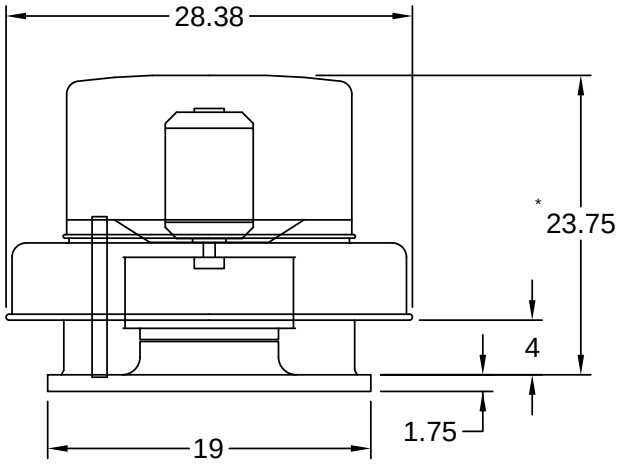

Reference assembly view drawings for actual dimensions with mounted accessories

*Overall height may be greater depending on motor

Dimensional	
Quantity	1
Weight w/o Acc's (lb)	58
Weight w/ Acc's (lb)	84
Max T Motor Frame Size	56
Roof Opening (in.)	14.5 x 14.5

Performance	
Requested Volume (CFM)	2,281
Actual Volume (CFM)	2,276
External SP (in. wg)	0.375
Total SP (in. wg)	0.373
Fan RPM	1725
Operating Power (hp)	0.53
Elevation (ft)	869
Airstream Temp.(F)	70
Air Density (ft3)	0.073
Tip Speed (ft/min)	5,927
Static Eff. (%)	25

Motor	
Motor Mounted	Yes
Size (hp)	1/2
V/C/P	115/60/1
Enclosure	ODP
Motor RPM	1725
Windings	1
NEC FLA* (Amps)	9.8

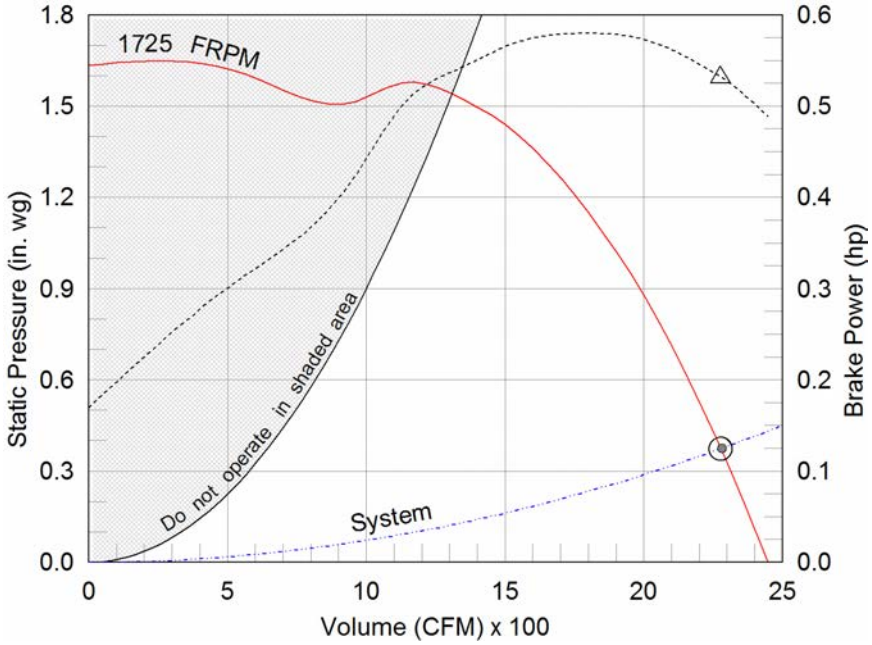

External SP	0.375	in. wg
Direct Drive RPM Adjustment	-0.002	in. wg
Total SP	0.373	in. wg

Sound Power by Octave Band

Sound Data	62.5	125	250	500	1000	2000	4000	8000	LwA	dBA	Sones
Inlet	79	81	81	79	72	70	67	64	80	68	16.5

Notes:

All dimensions shown are in units of in..
*FLA - based on tables 150 or 148 of National Electrical Code 2002. Actual motor FLA may vary, for sizing thermal overload, consult factory.
LwA - A weighted sound power level, based on ANSI S1.4
dBA - A weighted sound pressure level, based on 11.5 dB attenuation per Octave band at 5.0 ft - dBA levels are not licensed by AMCA International
Sones - calculated using AMCA 301 at 5.0 ft

Model: G-133-A

Direct Drive Centrifugal Roof Exhaust Fan

Standard Construction Features:

- Aluminum housing - Backward inclined wheel - Aluminum curb cap with prepunched mounting holes - Birdscreen - Ball bearing motors (sizes 100-180), sleeve bearing motors (sizes 60-95) - Motor isolated on shock mounts - Corrosion resistant fasteners.

Options & Accessories:

Motor with Thermal Overload
UL/cUL 705 Listed - "Power Ventilators"
Roof Curb-Galv., GPI-19-G18, Under Sized 1.5 in. Total
Unit Warranty: 1 Yr (Standard)

Assembly Drawing

Type: Direct Drive Centrifugal Roof Exhaust Fan

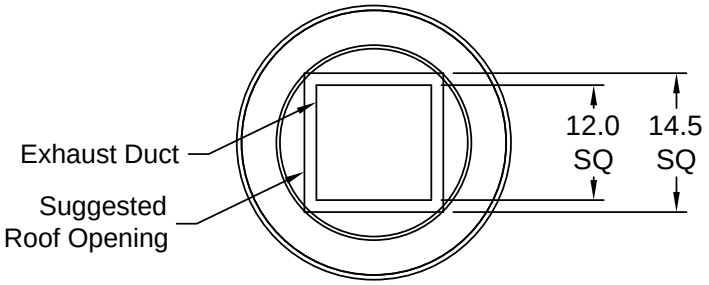

TOP VIEW

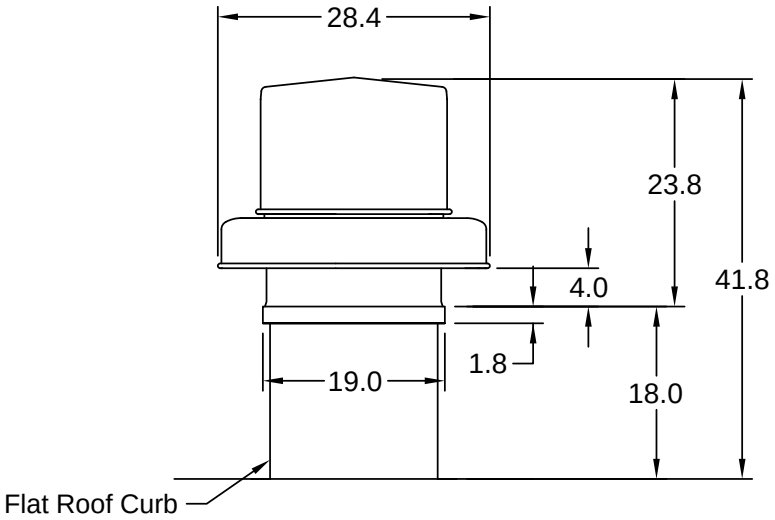

FRONT VIEW

Notes: All dimensions shown are in units of in..

Roof Curb

Model: GPI

Material: Galvanized

Standard Construction Features:

- Roof Curb fits between the building roof and the fan mounted directly to the roof support structure - Constructed of either 18 ga galvanized steel or 0.064 in. aluminum - Straight Sided without a cant - 2 in. mounting flange - 1 in. thick 3 lb density insulation - Height - Available from 8 in. to 42 in. as specified in 0.5 in. increments.

Notes:
- The Maximum roof opening dimension should not be greater than the "Actual" top outside dimension minus 2 in..
- The minimum roof opening dimension should be at least 2.5 in. more than the damper dimension or recommended duct size.
- The Roof Opening Dimension may NOT be the Structural Opening Dimension.
- Damper Tray is optional and must be specified. Tray size is same as damper size.
- Security bars are optional and must be specified. Frames and gridwork are all 10 ga steel. Gridwork is welded to the frame and the frame is welded to the curb. To prevent corrosion, they are coated with Greenheck's high performance Permatector coating.

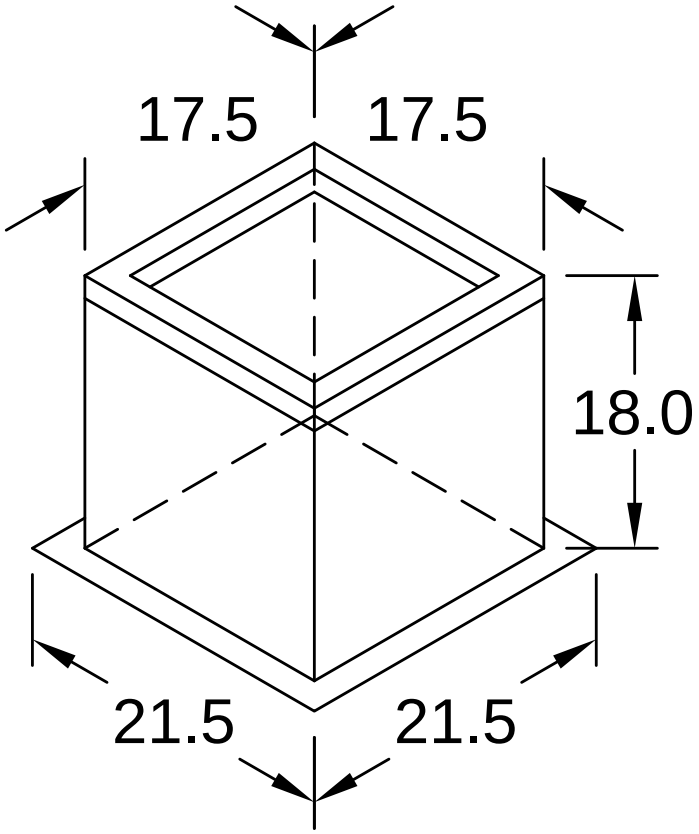

ISOMETRIC VIEW

Notes: All dimensions shown are in units of in.

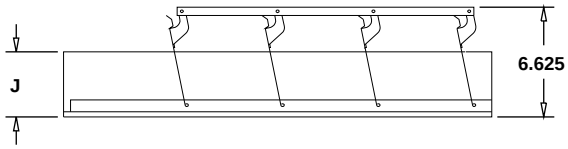

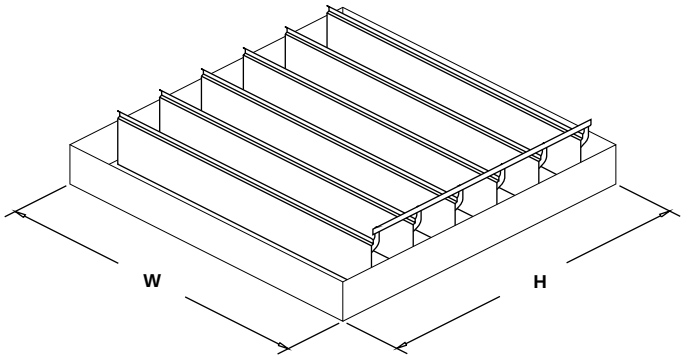

WD-100

Horizontal Mount Exhaust Damper

Application & Design

The model WD-100 is a horizontal mount, flangeless, backdraft damper designed to allow vertical ariflow up and prevent reverse airflow. The dampers are opened by air pressure differential (assisted by springs and closed by gravity). Optional motorpack converts the dampers to motorized operation.

RATINGS
Maximum Pressure: 1 in. wg
Maximum Velocity: 2,500 ft/min
Maximum Temperature: 180.0 F.

Installation instructions available at www.greenheck.com.

Notes: All dimensions shown are in units of inches.

W & H furnished approximately 0.125 in. undersize.

CONSTRUCTION FEATURES

Frame Material:	Galvanized	**Axle Bearings:**	Synthetic
Axle Material:	Steel	**Sizing:**	Nominal

ID #	Tag	Qty	W (in.)	H (in.)	J-Dim. (in.)
2-1	EF-2	1	16.000	16.000	2.5
Tags: EF-2					

Model: G-103-A

Direct Drive Centrifugal Roof Exhaust Fan

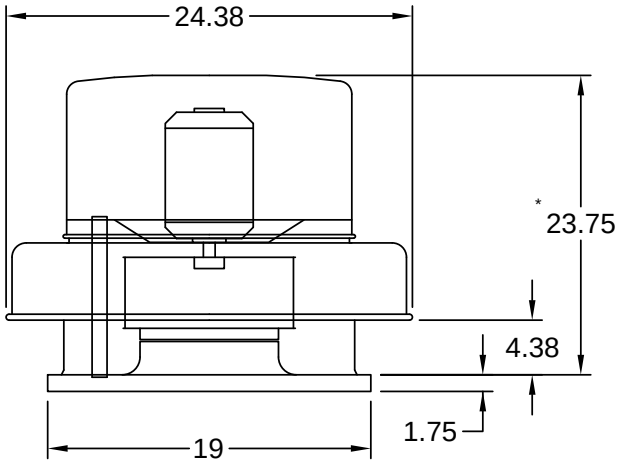

Reference assembly view drawings for actual dimensions with mounted accessories

*Overall height may be greater depending on motor

Dimensional	
Quantity	1
Weight w/o Acc's (lb)	46
Weight w/ Acc's (lb)	77
Max T Motor Frame Size	56
Optional Damper (in.)	12 x 12
Roof Opening (in.)	14.5 x 14.5

Performance	
Requested Volume (CFM)	1,374
Actual Volume (CFM)	1,351
External SP (in. wg)	0.25
Total SP (in. wg)	0.242
Fan RPM	1725
Operating Power (hp)	0.26
Elevation (ft)	869
Airstream Temp.(F)	70
Air Density (ft3)	0.073
Tip Speed (ft/min)	5,024
Static Eff. (%)	20

Motor	
Motor Mounted	Yes
Size (hp)	1/4
V/C/P	115/60/1
Enclosure	ODP
Motor RPM	1725
Windings	1
NEC FLA* (Amps)	5.8

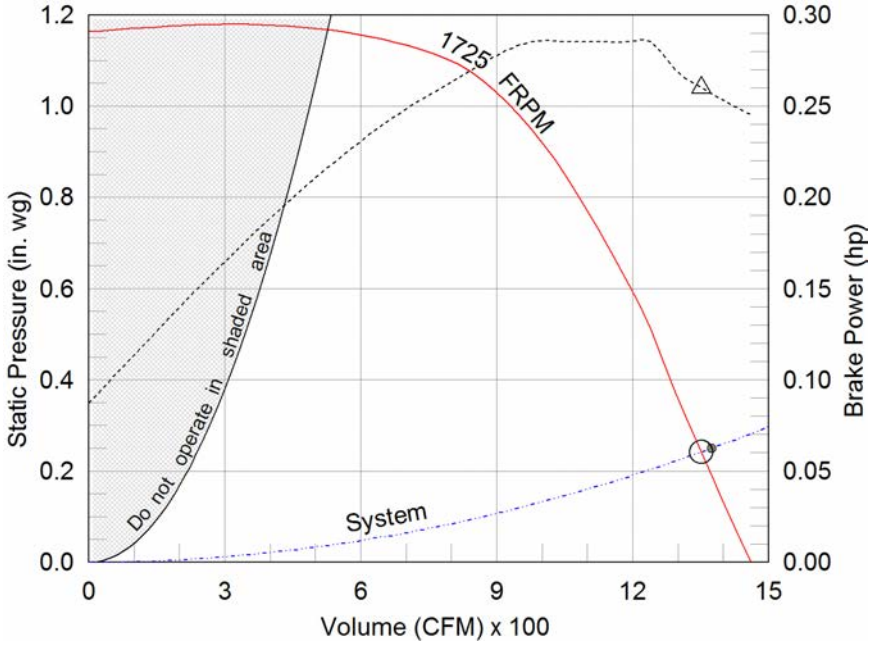

External SP	0.25	in. wg
Direct Drive RPM Adjustment	-0.008	in. wg
Total SP	0.242	in. wg

Sound Power by Octave Band

Sound Data	62.5	125	250	500	1000	2000	4000	8000	LwA	dBA	Sones
Inlet	73	77	77	73	66	65	59	52	74	63	11.5

Notes:

All dimensions shown are in units of in..
*FLA - based on tables 150 or 148 of National Electrical Code 2002. Actual motor FLA may vary, for sizing thermal overload, consult factory.
LwA - A weighted sound power level, based on ANSI S1.4
dBA - A weighted sound pressure level, based on 11.5 dB attenuation per Octave band at 5.0 ft - dBA levels are not licensed by AMCA International
Sones - calculated using AMCA 301 at 5.0 ft

amca CERTIFIED RATINGS SOUND AND AIR PERFORMANCE AIR MOVEMENT AND CONTROL ASSOCIATION INTERNATIONAL, INC. www.amca.org

Model: G-103-A

Direct Drive Centrifugal Roof Exhaust Fan

Standard Construction Features:

- Aluminum housing - Backward inclined wheel - Aluminum curb cap with prepunched mounting holes - Birdscreen - Ball bearing motors (sizes 100-180), sleeve bearing motors (sizes 60-95) - Motor isolated on shock mounts - Corrosion resistant fasteners.

Options & Accessories:

Motor with Thermal Overload
UL/cUL 705 Listed - "Power Ventilators"
Roof Curb-Galv., GPI-19-G18, Under Sized 1.5 in. Total
Damper, WD-100-PB-12X12, Gravity Operated (Loose), Not Coated
Unit Warranty: 1 Yr (Standard)

Assembly Drawing

Type: Direct Drive Centrifugal Roof Exhaust Fan

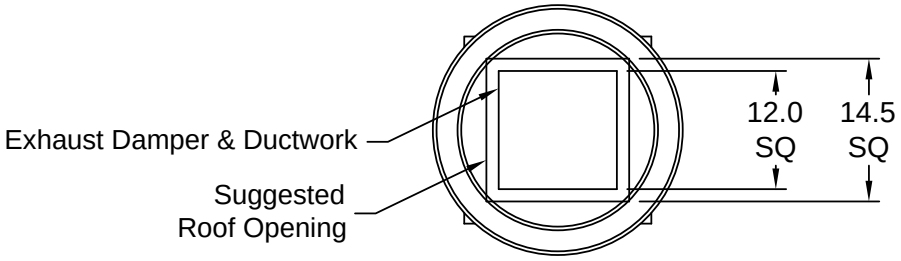

TOP VIEW

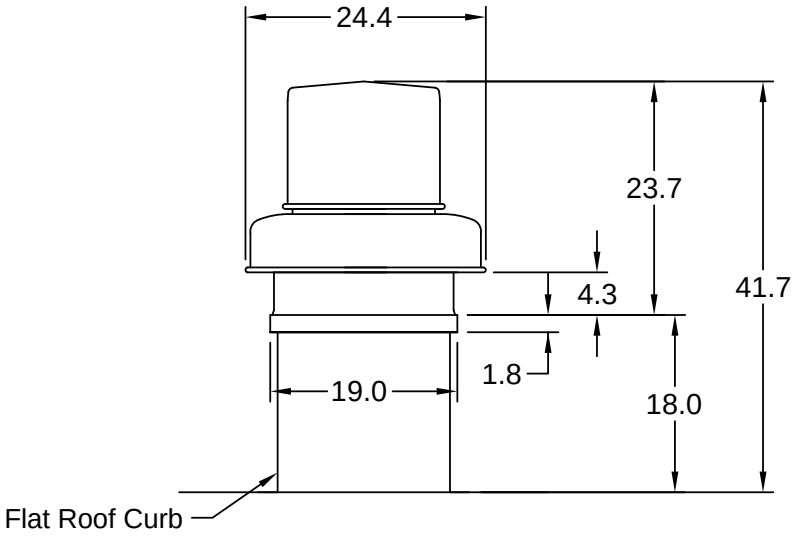

FRONT VIEW

Notes: All dimensions shown are in units of in..

Horizontal Mount Exhaust Damper

Model: WD-100

Standard Construction Features:

- Model WD-100 is a horizontal mount exhaust damper (air flow up) and is constructed of 18 ga galvanized steel with pre-punched mounting holes - Damper blades are 0.025 in. roll formed aluminum with vinyl seals on the closing edge, and spring assisted for ease of opening - Steel axles are 0.188 in. diameter zinc plated mounted in acetal bushings - Synthetic axle bearings

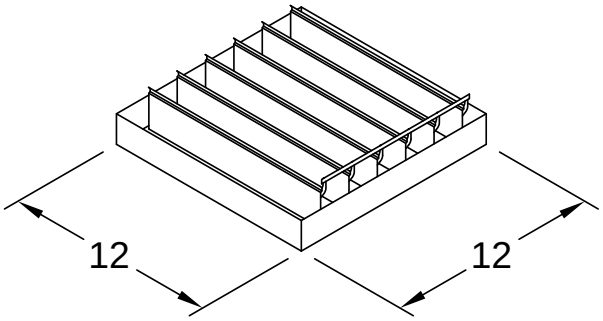

DAMPER

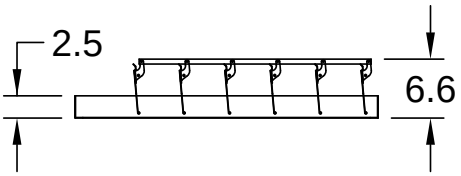

TYP. SECTION VIEW

Notes: All dimensions shown are in units of in.
Width And height furnished approximately 0.125 in. undersize

Roof Curb

Model: GPI

Material: Galvanized

Standard Construction Features:

- Roof Curb fits between the building roof and the fan mounted directly to the roof support structure - Constructed of either 18 ga galvanized steel or 0.064 in. aluminum - Straight Sided without a cant - 2 in. mounting flange - 1 in. thick 3 lb density insulation - Height - Available from 8 in. to 42 in. as specified in 0.5 in. increments.

Notes:
- The Maximum roof opening dimension should not be greater than the "Actual" top outside dimension minus 2 in..
- The minimum roof opening dimension should be at least 2.5 in. more than the damper dimension or recommended duct size.
- The Roof Opening Dimension may NOT be the Structural Opening Dimension.
- Damper Tray is optional and must be specified. Tray size is same as damper size.
- Security bars are optional and must be specified. Frames and gridwork are all 10 ga steel. Gridwork is welded to the frame and the frame is welded to the curb. To prevent corrosion, they are coated with Greenheck's high performance Permatector coating.

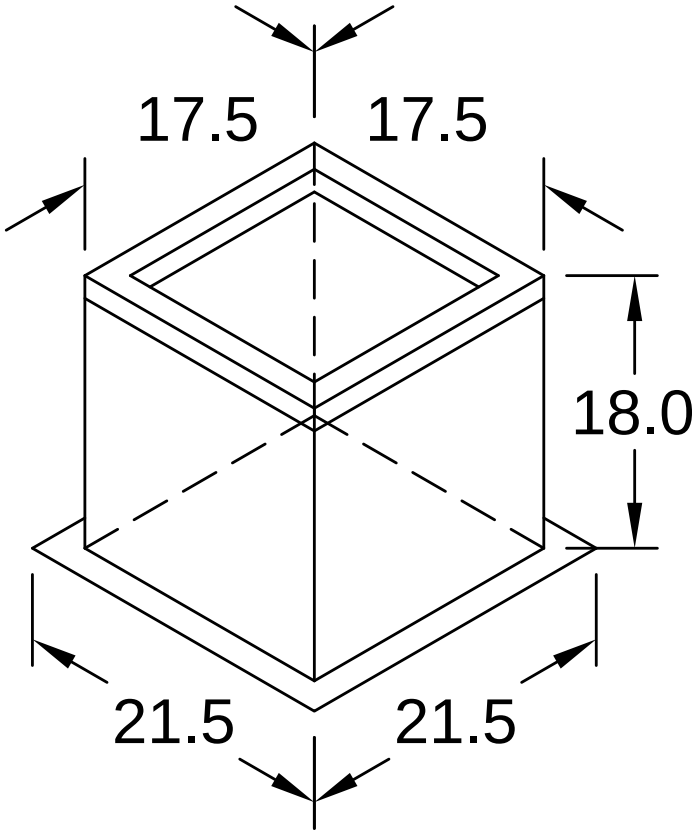

ISOMETRIC VIEW

Notes: All dimensions shown are in units of in.

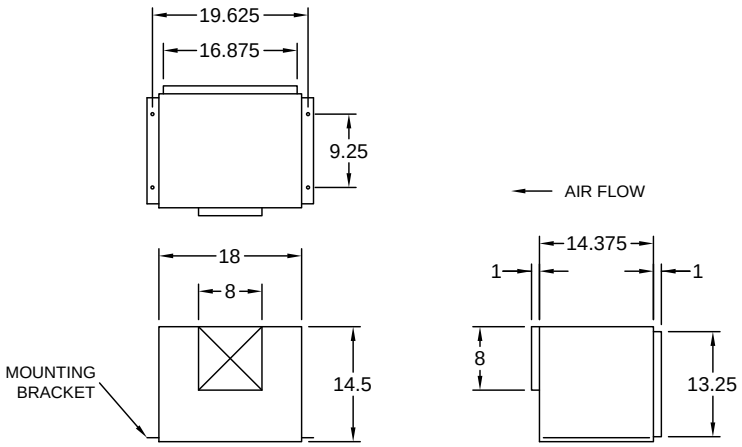

Model: CSP-A410

Inline Cabinet Fan

Standard Construction Features:

- Galvanized steel housing - Sound absorbing insulation - Outlet duct collar with integral back draft damper - Forward curved wheel - Plug type disconnect - Adjustable mounting brackets - Square duct connection - Field rotatable discharge

Options & Accessories:

UL/cUL 507 Listed - Electric Fan
Galvanized Wheel Material

Dimensional	
Quantity	1
Weight w/o Acc's (lb)	36
Weight w/ Acc's (lb)	36

Performance	
Requested Volume (CFM)	300
Actual Volume (CFM)	338
External SP (in. wg)	0.25
Total SP (in. wg)	0.317
Fan RPM	1000
Watts (W)	139
Amps (A)	1.87
Elevation (ft)	869
Airstream Temp.(F)	70
Air Density (ft3)	0.073

Motor	
Motor Mounted	Yes
Watts (W)	139
V/C/P	115/60/1
Enclosure	ODP
NEC FLA* (Amps)	NA

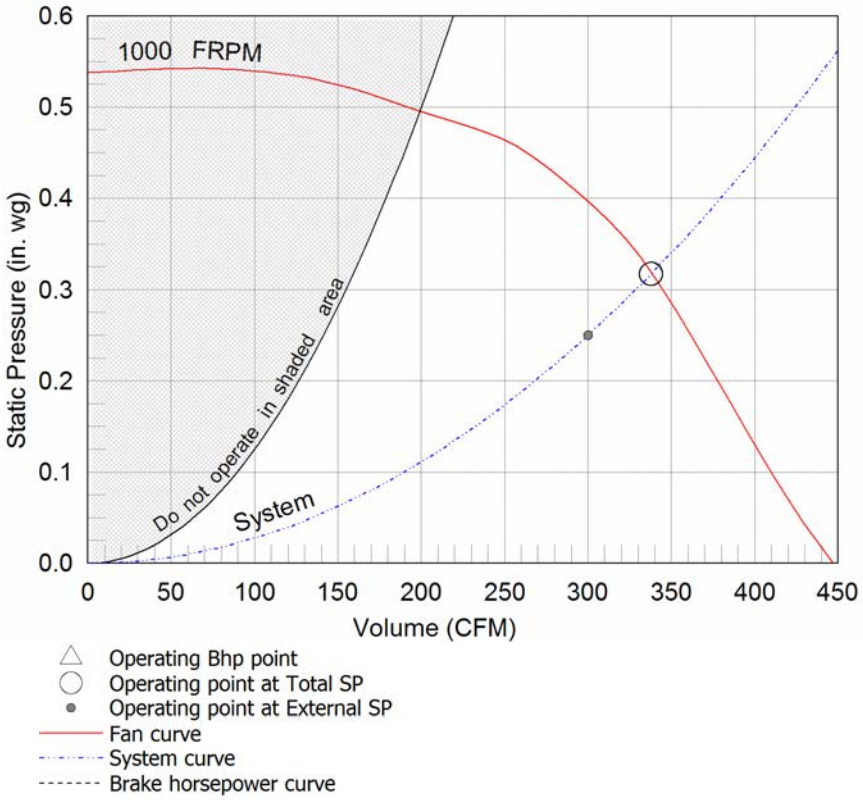

Notes:

All dimensions shown are in units of in..
*FLA is approximate and will vary slightly with the motor.
LwA - A weighted sound power level, based on ANSI S1.4
dBA - A weighted sound pressure level, based on 11.5 dB attenuation per Octave band at 5.0 ft
Sones - calculated using AMCA 301 at 5.0 ft
AMCA certified ratings seal applies to sone ratings only.
Wattage is shown at free air.

Sound Power by Octave Band

Sound Data	62.5	125	250	500	1000	2000	4000	8000	LwA	dBA	Sones
Inlet	60	68	49	36	33	29	26	26	53	39	1.9

FD-150X12

Static Rated Fire Damper

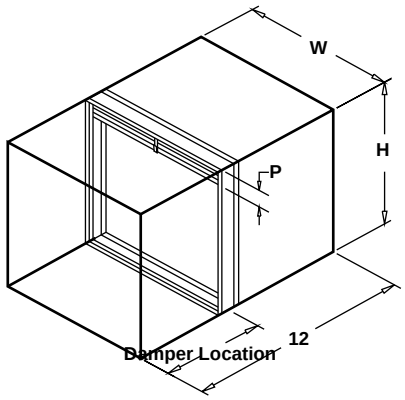

Application & Design

Model FD-150X12 (fire damper with integral 12.000 in. sleeve) is approved for use in walls, floors, and partitions with fire resistance ratings less than 3 hours. This model carries a 1 1/2 hour UL fire damper label. UL-555 classifies static rated fire dampers for use in HVAC systems that are automatically shut down in the event of fire.

UL555 FIRE RESISTANCE RATING
Fire Rating: 1 1/2 hour

Note: When ordering C, CO or CR transitions, they are positioned 1.000 in. from bottom of sleeve.

Notes: All dimensions shown are in units of inches.
W & H furnished approximately 0.25 in. undersized.
(sleeve thickness IS included)

Codes Approved

This model meets the requirements for fire dampers established by:
NFPA Standards 80, 90A & 101.
UL Classified to U.S. and Canadian Safety Standards 555 (Listing #R13317)
IBC (International Building Codes)
CSFM - California State Fire Marshal Fire Damper Listing (#3225-0981:102)
New York City (MEA Listing #260-91-M)

Installation instructions available at www.greenheck.com.

CONSTRUCTION FEATURES

Transition:	A
Mounting:	Horizontal
Closure Device:	Fusible Link
Closure Temp. (F):	165
Sleeve Thickness (ga):	20
Sizing:	Nominal

ID #	Tag	Qty	W (in.)	H (in.)	Sections Wide	Sections High	P-Dim (in.)	Damper Location (K) (in.)	Sleeve Length (in.)
3-1	EF-4	1	16.000	16.000	1	1	2.093	6	12
Tags:									

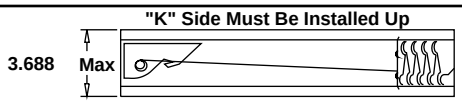

FD-150

Static Rated Fire Damper

Application & Design

Model FD-150 is approved for use in walls, floors, and partitions with fire resistance ratings less than 3 hours. This model carries a 1 1/2 hour UL fire damper label. UL 555 classifies static rated fire dampers for use in HVAC systems that are automatically shut down in the event of fire.

UL555 FIRE RESISTANCE RATING
Fire Rating: 1 1/2 hour

Note: When ordering C, CO or CR transitions, they are positioned 1.000 in. from bottom of sleeve.

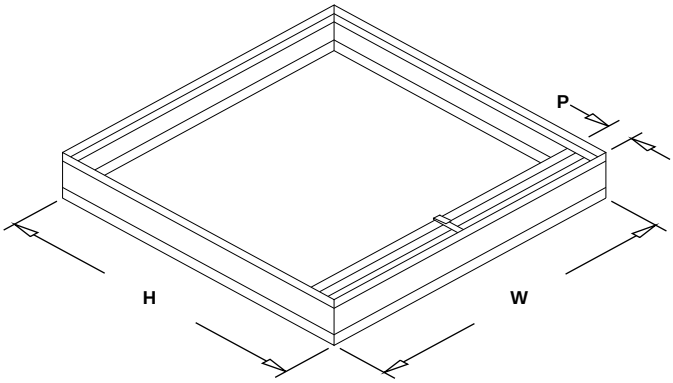

Notes: All dimensions shown are in units of inches.
W & H furnished approximately 0.25 in. undersized. (sleeve thickness is NOT included)

Codes Approved

This model meets the requirements for fire dampers established by:
NFPA Standards 80, 90A & 101.
UL Classified to U.S. and Canadian Safety Standards 555 (Listing #R13317)
IBC (International Building Codes)
CSFM - California State Fire Marshal Fire Damper Listing (#3225-0981:102)
New York City (MEA Listing #260-91-M)

Installation instructions available at www.greenheck.com.

CONSTRUCTION FEATURES

Transition:	A
Mounting:	Horizontal
Closure Device:	Fusible Link
Closure Temp. (F):	165
Sizing:	Nominal

ID #	Tag	Qty	W (in.)	H (in.)	Sections Wide	Sections High	P-Dim (in.)
4-1		1	16.000	16.000	1	1	2.093
Tags:							

EPS10-1 AND EPS10-2 Alarm Pressure Switches

System Sensor EPS10 Series switches are designed for use in wet, dry, deluge, and pre-action automatic sprinkler systems to indicate a discharge from a sprinkler.

Features

- Sensitivity adjustment wheel, no special tools required
- Reinforced diaphragm resists pressure spikes
- Two conduit entrances
- Both one- and two-switch models available

The EPS10-1 has a single SPDT switch while the EPS10-2 model contains two SPDT switches. The EPS10 Series features field adjustable pressure sensitivity to provide an alarm response between 4 and 20 psi. It is factory set to respond at 4 – 8 psi on rising or falling pressure. The pressure adjustment wheel requires no special tools and does not affect switch synchronization on the EPS10-2. The EPS10 Series switches are NEMA 4 rated.

Agency Listings

LISTED S739

ULC CS169

FM APPROVED 3005863

7770-1209:147

MEA approved 167-93-E

VdS G4020028-27

Specifications, EPS10-1 and EPS10-2

Architectural/Engineering Specifications EPS10-1 (SPDT), EPS10-2 (2/SPDT)

Model shall be an EPS10-1 or EPS10-2 pressure type waterflow switch as manufactured by System Sensor of St. Charles, IL. They shall be installed on the sprinkler system with connection as shown on the drawings and/or as specified herein. Pressure switches shall be of the bellows-activated type. Switches shall have a maximum service pressure rating of 250 psi and shall be factory adjusted to operate at a pressure of 4 – 8 psi. There shall be one (1) or two (2) SPDT contacts rated at 10.0 Amp @ 125/250 VAC and 2.5 Amp @ 6/12/24 VDC. The contractor shall furnish and install, where indicated on the plans, pressure switches according to appropriate NFPA standards. Switches shall be provided with a ½˝ NPT male pressure connection to be connected to the alarm check valve of a "wet" sprinkler system, into the intermediate chamber of a "dry" system, or to a pre-action or deluge valve. They shall be activated by any flow of water equal to or in excess of the discharge from one sprinkler head. Switches shall provide 1 knockout type and 1 open hole for ½˝ conduit fitting attachment and a ground screw provision for electrical grounding. The switch enclosure shall be weatherproof and carry a UL 4x/NEMA 4 rating when used with proper electrical fittings and conduit. The cover shall incorporate tamper-resistant screws. The unit shall be listed by Underwriters Laboratories, Inc. and approved by Factory Mutual.

Specifications, EPS10-1 and EPS10-2 (continued)

Physical/Operating Specifications			
Maximum Operating Pressure	250 psi	**Operating Temperature Range**	Indoor or outdoor use: –40°F to 160°F (–40°C to 71°C)
Maximum Adjustment Pressure Range	4 to 20 psi	**Cover Tamper Switch**	UL Models: Optional P/N 546-8000 ULC Models: Factory Installed
Differential	Approximately 3 psi throughout range	**Enclosure**	Rated UL 4x, NEMA 4 for indoor or outdoor use
Factory Setting	Operates at rising pressure 4 to 8 psi	**Shipping Weight**	1.2 lbs. (.54 Kg)
Switch Contact Ratings	EPS10-1: One set SPDT (Form C) EPS10-2: Two sets SPDT (Form C) 10.0 A, ½ HP @ 125/250 VAC 2.5 A @ 6/12/24 VDC	**Service Use**	Automatic Sprinkler: NFPA 13 One or Two Family Dwelling: NFPA 13D Residential Occupancies up to 4 Stories: NFPA 13R National Fire Alarm Code: NFPA 72
Pressure Connection	½″ NPT male glass reinforced nylon	**Warranty**	3 years
Dimensions	5.12″ H × 3.325″ W × 4.250″ L (13.0 cm × 8.4 cm × 10.8 cm)		

Typical Sprinkler Applications

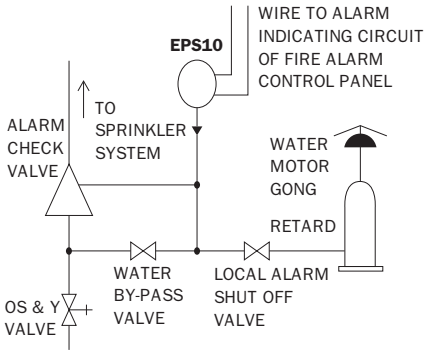

WET SYSTEM

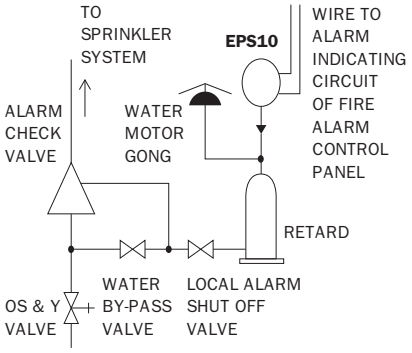

WET SYSTEM

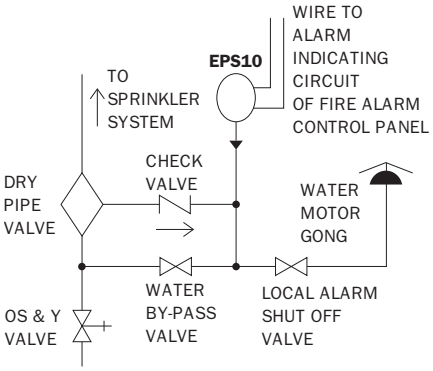

DRY SYSTEM

Pressure Switch Basic Dimensions

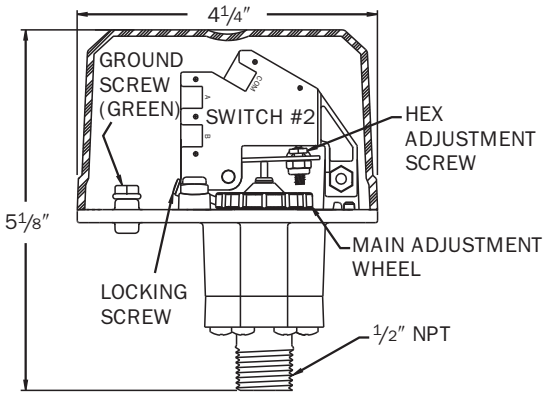

Electrical Connections

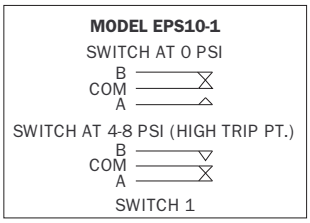

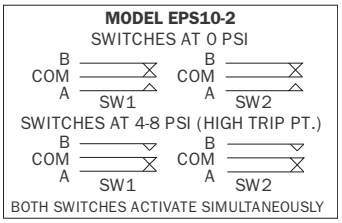

Ordering Information

Part No.	Description
EPS10-1	Alarm Waterflow Pressure Switch, One SPDT, 4–20 PSI
EPS10-2	Alarm Waterflow Pressure Switch, Two SPDT, 4–20 PSI
EPSA10-1	ULC/Canadian Version
EPSA10-2	ULC/Canadian Version
Replacement Parts	
S07-66-02	Replacement Tamper Screws for Cover of EPS
WFDW	Replacement Tamper Proof Wrench for Cover of EPS
546-8000	Cover Tamper Switch for EPS Series

SYSTEM SENSOR®

3825 Ohio Avenue • St. Charles, IL 60174
Phone: 800-SENSOR2 • Fax: 630-377-6495

©2006 System Sensor.
Product specifications subject to change without notice. Visit systemsensor.com for current product information, including the latest version of this data sheet.

A05-0176-009 • 9/06 • #1676

EPS40-1 AND EPS40-2 Supervisory Pressure Switches

System Sensor EPS40 Series switches are designed for use in dry pipe systems or pressure tanks and water pressure supplies of automatic water control valves.

Features

- Sensitivity adjustment wheel, no special tools required
- Reinforced diaphragm resists pressure spikes
- Two conduit entrances
- Both one- and two-switch models available

Agency Listings

S739 · 118f/01 · 0X0A7.AY · CS169 · G4020028 · 7770-1209:147 · 167-93-E

The EPS40-1 has a single SPDT switch while the EPS40-2 model contains two SPDT switches. The EPS40 Series features field adjustable pressure sensitivity to provide an alarm response between 10 and 100 psi. All models are factory set for use in a nominal 40 psi system. The EPS40-1 is factory set to respond at 30 psi at decreasing pressure while the EPS40-2 is factory set to respond at 50 psi on rising pressure and 30 psi at decreasing pressure. The pressure adjustment wheel requires no special tools and does not affect switch synchronization on the EPS40-2. The EPS40-1 and EPS40-2 supervisory pressure switches are NEMA 4 rated.

Specifications, EPS40-1 and EPS40-2

Architectural/Engineering Specifications EPS40-1 (SPDT), EPS40-2 (2/SPDT)

Model shall be an EPS40-1 or EPS40-2 pressure type waterflow switch as manufactured by System Sensor of St. Charles, IL. They shall be installed on the sprinkler system with connection as shown on the drawings and/or as specified herein. Pressure switches shall be of the bellows-activated type. Switches shall have a maximum service pressure rating of 250 psi and shall be adjustable from 10 – 100 psi. There shall be one (1) or two (2) SPDT contacts rated at 10.0 Amp @ 125/250 VAC and 2.5 Amp @ 6/12/24 VDC. The contractor shall furnish and install, where indicated on the plans, pressure switches according to appropriate NFPA standards. Switches shall be provided with a ½˝ NPT male pressure connection to be connected into the air supply line on the system side of any shut-off valve. Switches shall provide 1 knockout type and 1 open hole for ½˝ conduit fitting attachment and a ground screw provision for electrical grounding.
The switch enclosure shall be weatherproof and carry a UL 4x/NEMA 4 rating when used with proper electrical fittings and conduit. The cover shall incorporate tamper-resistant screws. The unit shall be listed by Underwriters Laboratories, Inc., the California State Fire Marshal, MEA, CSFM, LPCB, VdS and approved by Factory Mutual.

Specifications, EPS40-1 and EPS40-2 (continued)

Physical/Operating Specifications			
Maximum Operating Pressure	250 psi	**Operating Temperature Range**	Indoor or outdoor use: –40°F to 160°F (–40°C to 71°C)
Maximum Adjustment Pressure Range	10 to 100 psi	**Cover Tamper Switch**	UL Models: Optional P/N 546-8000 ULC Models: Factory Installed
Differential	Approximately 3 psi @ 10 psi, 6 psi @ 100 psi	**Enclosure**	Rated UL 4x, NEMA 4 for indoor or outdoor use
Factory Setting	EPS40-1 operates at decreasing pressure at 30 psi EPS40-2 operates at increasing pressure at 50 psi and decreasing pressure at 30 psi	**Shipping Weight**	1.2 lbs. (.54 Kg)
Switch Contact Ratings	EPS10-1: One set SPDT (Form C) EPS10-2: Two sets SPDT (Form C) 10.0 A, ½ HP @ 125/250 VAC 2.5 A @ 6/12/24 VDC	**Service Use**	Automatic Sprinkler: NFPA 13 One or Two Family Dwelling: NFPA 13D Residential Occupancies up to 4 Stories: NFPA 13R National Fire Alarm Code: NFPA 72
Pressure Connection	½″ NPT male	**Warranty**	3 years
Dimensions	5.12″ H × 3.325″ W × 4.250″ L (13.0 cm × 8.4 cm × 10.8 cm)		

Typical Sprinkler Applications

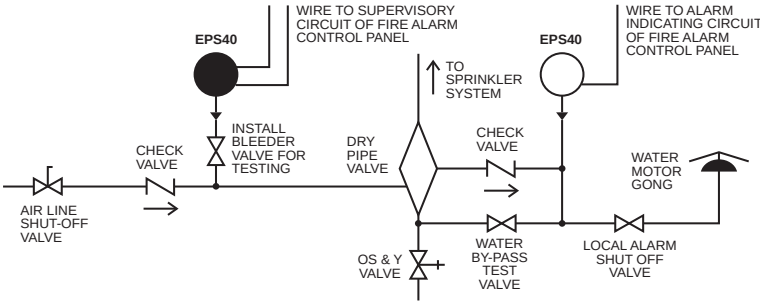

DRY SYSTEM

Electrical Connections

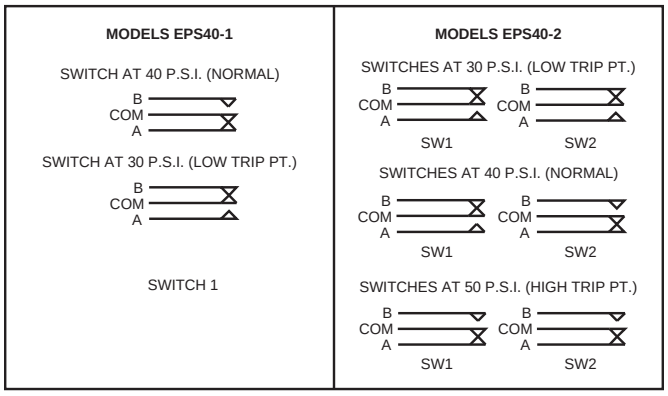

Pressure Switch Basic Dimensions

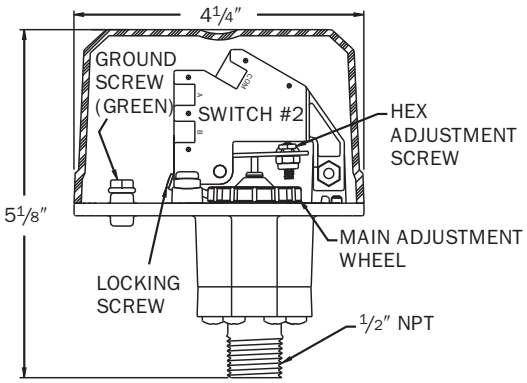

Ordering Information

Part No.	Description
EPS40-1	Low Pressure Supervisory Switch, One SPDT, 10–100 PSI
EPS40-2	High/Low Pressure Supervisory Switch, Two SPDT, 10–100 PSI
EPSA40-1	Low Pressure Supervisory Switch, One SPDT, 10–100 PSI (ULC Model)
EPSA40-2	High/Low Pressure Supervisory Switch, Two SPDT, 10–100 PSI (ULC Model)
Replacement Parts	
S07-66-XX	Replacement Tamper Screws for Cover of EPS
WFDW	Replacement Tamper Proof Wrench for Cover of EPS
546-8000	Cover Tamper Switch for EPS Series

SYSTEM SENSOR®
3825 Ohio Avenue • St. Charles, IL 60174
Phone: 800-SENSOR2 • Fax: 630-377-6495

©2006 System Sensor.
Product specifications subject to change without notice. Visit systemsensor.com for current product information, including the latest version of this data sheet.
A05-0177-010 • 9/06 • #1676

WFD Series Waterflow Detector

System Sensor's WFD series is compatible with schedule 10 through 40 steel pipe, sizes 2˝ through 8˝, and can be mounted in a vertical or horizontal position.

Features

- Two-inch conduit openings in new WFD30-2 models
- UL listed models are NEMA 4 rated
- Sealed retard mechanism immune to dust and other contaminants
- Visual switch activation
- Field replaceable retard mechanism and SPDT switches
- Rugged, dual SPDT switches enclosed in a durable terminal block
- Accommodates up to 12 AWG wire
- Designed for both indoor/outdoor use
- 100 percent synchronization activates both alarm panel and local bell
- Tamper resistant cover screws

Robust Construction. The WFD series consists of a rugged, NEMA 4 rated enclosure. Designed for both indoor and outdoor use, the WFD series operates across a wide temperature range, from 32°F to 120°F.

Reliable Performance. UL listed models are equipped with tamper resistant cover screws to prevent unauthorized entry. Inside, two sets of SPDT (Form C) synchronized switches are enclosed in a durable terminal block to assure reliable performance.

False Alarm Immunity. The WFD series incorporates a mechanical retard feature, which minimizes the risk of false alarm due to pressure surges or air trapped in the sprinkler system. In addition, the mechanical retard's unique sealed design is immune to dust and other contaminants.

Simplified Operation. The WFD series is designed to simplify installation. Two conduit openings permit easy attachment to the local alarm system. The retard mechanism and dual SPDT switches are field-replaceable.

Agency Listings

UL LISTED S739 · ULC CS169 · 7770-1209:140 · MEA approved 167-93-E · FM APPROVED 1W9A2.AH

Waterflow Detector Specifications

Engineering Specifications

Vane-type waterflow detectors shall be installed on system piping as designated on the drawing and/or as specified herein. Detectors shall mount on any clear pipe span of the appropriate nominal size, either a vertical upflow or horizontal run, at least 6″ from any fittings which may change water direction, flow rate, or pipe diameter or no closer than 24″ from a valve or drain. Detectors shall have a sensitivity in the range of 4 to 10 gallons per minute and a static pressure rating of 450 psi* for 2″ – 8″ pipes. The detector shall respond to waterflow in the specified direction after a preset time delay which is field adjustable. The delay mechanism shall be a sealed mechanical pneumatic unit with visual indication of actuation. The actuation mechanism shall include a polyethylene vane inserted through a hole in the pipe and connected by a mechanical linkage to the delay mechanism. Outputs shall consist of dual SPDT switches (Form C contacts). Two conduit entrances for standard fittings of commonly used electrical conduit shall be provided on the detectors. A grounding provision is provided. Unless noted, enclosures shall be NEMA 4 listed by Underwriters Laboratories Inc. All detectors shall be listed by Underwriters Laboratories Inc. for indoor or outdoor use.

Standard Specifications

Static Pressure Rating	450 PSI*	**Operating Temperature Range**	32°F to 120°F (0°C to 49°C)
Maximum Surge	18 Feet Per Second (FPS)	**Enclosure Rating***	NEMA 4 – suitable for indoor/outdoor use
Triggering Threshold Bandwidth (Flow Rate)	4–10 GPM	**Cover Tamper Switch**	Standard with ULC models, optional for UL models, part no. 546-7000
Conduit Entrances	Two openings for ½″ conduit. One open, one knock-out type	**Service Use**	Automatic Sprinkler: NFPA-13 One or Two Family Dwelling: NFPA 13D Residential Occupancies up to 4 Stories: NFPA 13R National Fire Alarm Code: NFPA-72
Contact Ratings	Two sets of SPDT (Form C) 10.0 A, ½ HP @ 125/250 VAC 2.5 A @ 6/12/24 VDC	**U.S. Patent Numbers**	3,845,259 4,782,333 5,213,205
Compatible Pipe	Steel water pipe, schedule 10 through 40	**Warranty**	3 Years

WFDE Field Wiring Diagram

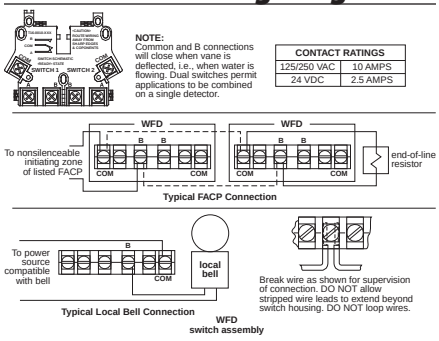

Delay Adjustment Dial

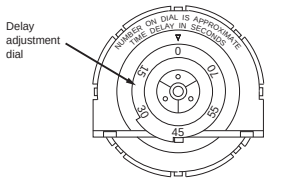

NOTE: Retard time may exceed 90 seconds.
Adjust and verify that time does not exceed 90 seconds.

Overall Dimensions, Installed

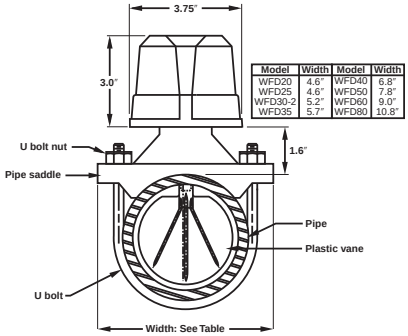

Model	Width	Model	Width
WFD20	4.6″	WFD40	6.8″
WFD25	4.6″	WFD50	7.8″
WFD30-2	5.2″	WFD60	9.0″
WFD35	5.7″	WFD80	10.8″

Ordering Information

UL Model	ULC Model	Pipe Size	Hole Size	Shipping Weight
WFD20	WFD20A	2″	1¼″	4.2 lbs.
WFD25	WFD25A	2½″	1¼″	4.3 lbs.
WFD30-2	WFD30-2A	3″	2″	4.5 lbs.
WFD35	WFD35A	3½″	1¼″	4.7 lbs.
WFD40	WFD40A	4″	2″	5.2 lbs.
WFD50	WFD50A	5″	2″	6.3 lbs.
WFD60*	WFD60A	6″	2″	6.8 lbs.
WFD80*	WFD80A	8″	2″	7.5 lbs.
Accessories				
A3008-00	Retard mechanism			
A77-01-02	Terminal block			
546-7000	Tamper proof switch kit			
WFDW	Tamper proof wrench for cover			
WFDN4	Gasket kit			

*Maximum pressure rating 400 psi as approved by Factory Mutual.

SYSTEM SENSOR®

3825 Ohio Avenue • St. Charles, IL 60174
Phone: 800-SENSOR2 • Fax: 630-377-6495

©2007 System Sensor.
Product specifications subject to change without notice. Visit systemsensor.com for current product information, including the latest version of this data sheet.

A05-0180-011 • 3/07 • #1676

OSY2
Supervisory Switch

System Sensor's OSY2 is used to monitor the open position of an Outside Screw and Yoke (OS&Y) type gate valve.

Features

- NEMA 3R rated enclosure
- User-friendly mounting bracket fits newer valve yokes
- Single side conduit entry does not require right angle fittings
- Adjustable length actuator eliminates the need for cutting the shaft
- Accommodates up to 12 AWG wire
- Three position switch monitors vandal and valve close signals
- Two SPDT contacts are enclosed in a durable terminal block for added strength
- 100% synchronization activates both alarm panel and local bell simultaneously

Robust Construction. The OSY2 consists of a rugged housing, intended for indoor and outdoor use. When installed with the actuator in the vertical position, the OSY2 is NEMA 3R rated per UL.

Application Flexibility. The OSY2 features a user-friendly mounting bracket and adjustable shaft to permit mounting to most OS&Y valves, ranging in size from 1″ to 12″. Its right angle design and wide bracket span provides maximum clearance for valve components, to accommodate troublesome valves. Removing the OSY2's gate valve bracket allows the unit to monitor side-bracket style pressure reducing valves.

Simplified Operation. Installation is made easier with the OSY2's single side conduit entrance. By providing a direct conduit pathway to the electrical source, right angle fittings are not required. Installation is further simplified by the OSY2's adjustable length actuator, which eliminates the need for cutting the shaft.

Reliable Performance. The OSY2 is equipped with tamper resistant cover screws to prevent unauthorized entry. Inside, two sets of SPDT (Form C) synchronized switches are enclosed in a durable terminal block to assure reliable performance.

Agency Listings

S739 CS169 OW6A8.AY 167–93–E 7770–1209:217

OSY2 Specifications

Architectural/Engineering Specifications

Model shall be model number OSY2 supervisory switch as manufactured by System Sensor. OSY2 shall be installed on each valve as designated on the drawings and/or as specified herein. Switches shall be mounted so as not to interfere with the normal operation of the valve and shall be adjusted to operate within two revolutions of the valve control or when the stem has moved no more than one-fifth of the distance from its normal position. The mechanism shall be contained in a weatherproof die cast metal housing, which shall provide a side entrance for ½˝ conduit and incorporate the necessary facilities for attachment to the valve. A grounding provision is provided. The switch assembly shall include two switches each with a rated capacity of 10 Amp @ 125/250VAC and 2.5 Amp @ 24VDC. The cover shall contain tamper-resistant screws for which a security wrench will be provided with each switch. The OSY2 shall be Underwriters Laboratories listed for indoor or outdoor use. The OSY2 shall be Factory Mutual, CSFM, and MEA approved.

Physical Specifications		Operating Specifications	
Overall Switch Dimensions	5¾˝H x 3½˝W x 3¼˝D (14.6cm x 8.9cm x 8.2cm)	**Contact Ratings**	Two sets of SPDT (Form C) 10.0 A @ 125/250VAC; 2.5 @ 6/12/24VDC
Shipping Weight	2.8 lbs. (1.3 kg)	**Enclosure Rating**	UL indoor/outdoor NEMA 3R when mounted with the actuator vertical
Operating Temperature Range	32ºF to 120ºF (0ºC to 49ºC) NOTE: The OSY2 will operate from –40ºF to 120ºF (–40ºC to 49ºC); however UL does not test control valve supervisory switches below 32ºF (0ºC).	**Cover Tamper Switch**	Standard with ULC model Optional for UL model, part no. 546-7000
Maximum Stem Extension	2⅝˝ (6.7cm)	**Service Use**	Automatic Sprinkler: NFPA 13 One or Two Family Dwelling: NFPA 13D Residential Occupancies up to 4 stories: NFPA 13R National Fire Alarm code: NFPA 72
Bracket Span	¼˝H x 6¾˝W x 1˝D (5.7cm x 17.1cm x 2.5cm)	**Warranty**	3 years
Conduit Entrances	One single side open for ½˝ conduit	**U.S. Patent Nos.**	5,478,038; 5,213,205

Electrical Connections for OSY2

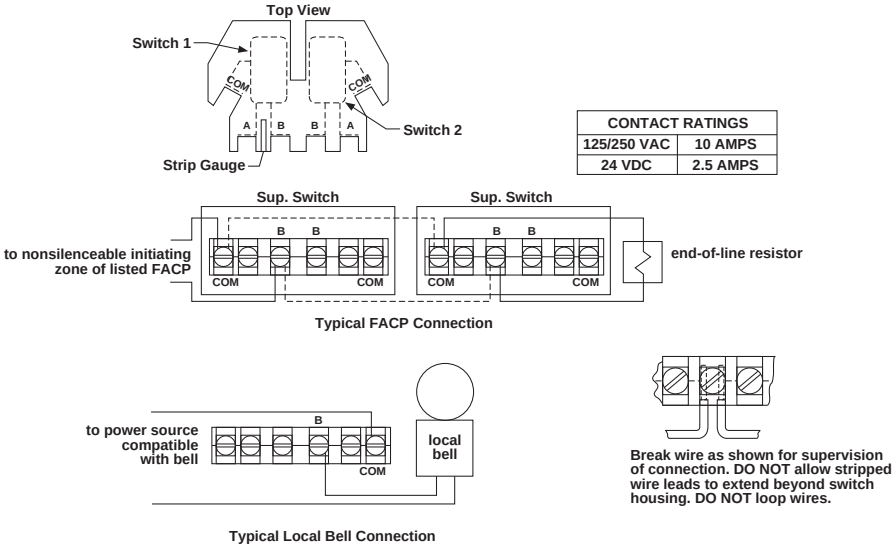

CONTACT RATINGS	
125/250 VAC	10 AMPS
24 VDC	2.5 AMPS

OSY2 Mounting

The following are examples of acceptable mounting positions:

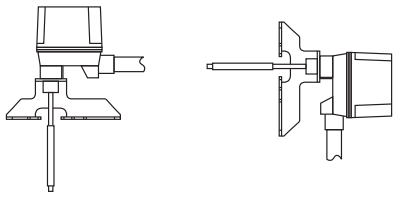

Actuator Vertical (Down) Actuator Horizontal

The following mounting position is not acceptable:

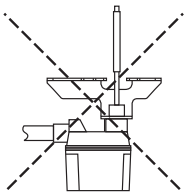

Actuator Vertical (Pointing Up)

Ordering Information

Part No.	Description
OSY2	Outside Screw and Yoke valve supervisory switch
OSY2A	Outside Screw and Yoke valve supervisory switch (ULC model)
Accessories	
OSYRK	Replacement hardware kit (wrenches, screw pack and J–hooks)
546-7000	Cover tamper switch kit
S07-66-XX	Tamper screws for cover
WFDW	Replacement tamper proof wrench for cover
HEXW	Replacement hex wrench

SYSTEM SENSOR®

3825 Ohio Avenue • St. Charles, IL 60174
Phone: 800-SENSOR2 • Fax: 630-377-6495

©2006 System Sensor.
Product specifications subject to change without notice. Visit systemsensor.com for current product information, including the latest version of this data sheet.

A05-0196-009 • 11/06 • #1676

POTTER
The Symbol of Protection

BELLS
PBA-AC & MBA-DC

UL, ULC, and FM Approved

Sizes Available: 6" (150mm), 8" (200mm) and 10" (250mm)

Voltages Available: 24VAC
120VAC
12VDC (10.2 to 15.6) Polarized
24VDC (20.4 to 31.2) Polarized

Service Use: Fire Alarm
General Signaling
Burglar Alarm

Environment: Indoor or outdoor use (See Note 1)
-40° to 150°F (-40° to 66°C)
(Outdoor use requires weatherproof backbox.)

Termination: AC Bells - 4 No. 18 AWG stranded wires
DC Bells - Terminal strip

Finish: Red powder coating

Optional: Model BBK-1 weatherproof backbox
Model BBX-1 deep weatherproof backbox

These vibrating type bells are designed for use as fire, burglar or general signaling devices. They have low power consumption and high decibel ratings. The unit mounts on a standard 4" (101mm) square electrical box for indoor use or on a model BBK-1 weatherproof backbox for outdoor applications. Weatherproof backbox model BBK-1, Stock No. 1500001.

ALL DC BELLS ARE POLARIZED AND HAVE BUILT-IN TRANSIENT PROTECTION:

Size inches (mm)	Voltage	Model Number	Stock Number	Current (Max.)	Typical dB at 10 ft. (3m) (2)	Minimum dB at 10 ft. (3m) (1)
6 (150)	12VDC	MBA126	1750070	.12A	85	76
8 (200)	12VDC	MBA128	1750080	.12A	90	77
10 (250)	12VDC	MBA1210	1750060	.12A	92	78
6 (150)	24VDC	MBA246	1750100	.06A	87	77
8 (200)	24VDC	MBA248	1750110	.06A	91	79
10 (250)	24VDC	MBA2410	1750090	.06A	94	80
6 (150)	24VAC	PBA246	1806024	.17A	91	78
8 (200)	24VAC	PBA248	1808024	.17A	94	77
10 (250)	24VAC	PBA2410	1810024	.17A	94	78
6 (150)	120VAC	PBA1206	1806120	.05A	92	83
8 (200)	120VAC	PBA1208	1808120	.05A	99	84
10 (250)	120VAC	PBA12010	1810120	.05A	99	86

Notes:
1. Minimum dB ratings are calculated from integrated sound pressure measurements made at Underwriters Laboratories as specified in UL Standard 464. UL temperature range is -30° to 150°F (-34° to 66°C).
2. Typical dB ratings are calculated from measurements made with a conventional sound level meter and are indicative of output levels in an actual installation.

Potter Electric Signal Company • 2081 Craig Road, St. Louis, MO, 63146-4161 • Phone: 800-325-3936/Canada 888-882-1833 • www.pottersignal.com

DIMENSIONS
INCHES (mm)

FIG. 1 **BELLS**

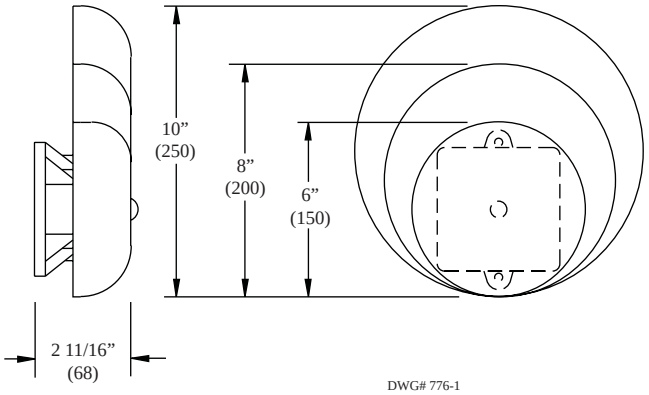

FIG. 2 **WEATHERPROOF BACKBOX**

BOX HAS ONE THREADED 1/2" CONDUIT ENTRANCE

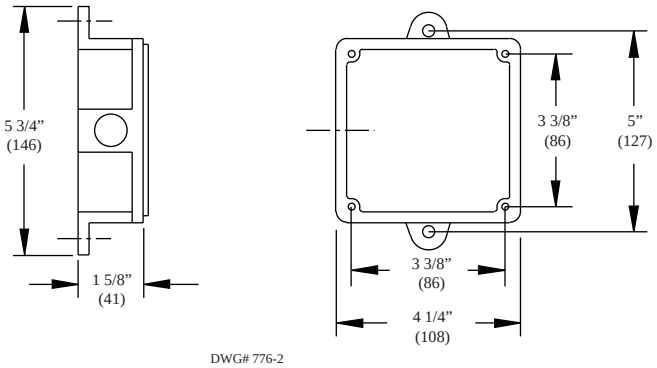

FIG. 3 **WIRING (REAR VIEW)**

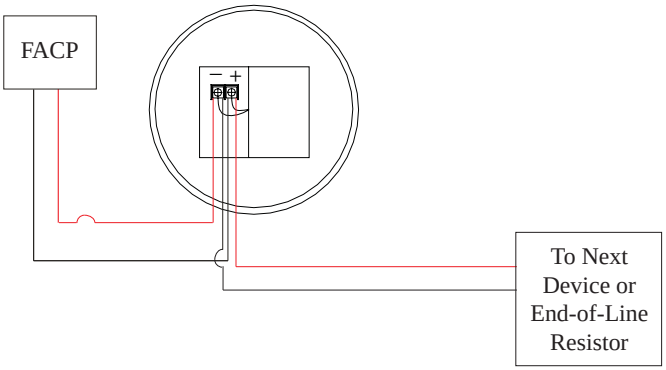

A.C. BELLS

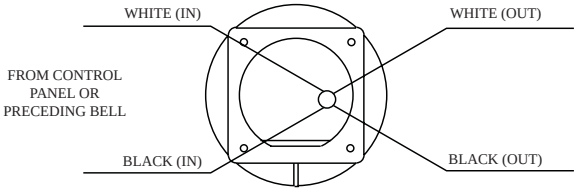

CAUTION:
WHEN ELECTRICAL SUPERVISION IS REQUIRED USE IN AND OUT LEADS AS SHOWN.

NOTES:

1. WHEN USING AC BELLS, TERMINATE EACH EXTRA WIRE SEPARATELY AFTER LAST BELL.
2. END-OF-LINE RESISTOR IS NOT REQUIRED ON AC BELLS.

DWG# 776-3

INSTALLATION

1. The bell shall be installed in accordance with NFPA 13, 72, or local AHJ. The top of the device shall be no less than 90" AFF and not less than 6" below the ceiling.
2. Remove the gong.
3. Connect wiring (see Fig. 3).
4. Mount bell mechanism to backbox (bell mechanism must be mounted with the striker pointing down).
5. Reinstall the gong (be sure that the gong positioning pin, in the mechanism housing, is in the hole in the gong).
6. Test all bells for proper operation and observe that they can be heard where required (bells must be heard in all areas as designated by the authority having jurisdiction).

Larger View

SLA7006056

This oil lubricated belt drive unit is an evolution of 40 years of proven technology. Designed with the professional in mind. This unit is a 60 gallon vertical stationary compressor that features a cast iron twin cylinder pump and industry leading 155 PSI max pressure.

FEATURES

- Cast iron twin cylinder pump features
  One-piece cast iron crankcase
  Thermally stable cast iron cylinder body
  Aluminum head & valve plate
  Automotive style ball bearings
  Durable Swedish stainless steel reed valves
  Oil level sight glass Easily accessible oil fill
  12" cast iron balanced flywheel
- Shipped with synthetic oil for optimum performance and long life
- Industry leading 155 PSI max pressure
- Large capacity, 60 gallon air receiver provides more air for longer run times on air tools such as ratchets, impacts, spray guns, hammers, etc
- Spread voltage motor allows unit to operate on 208 or 240 volt without any wiring changes
- Equipped with pressure gauge and on/off switch

SPECS

Tank

- **Size:** 60 Gallons
- **Style:** Vertical Stationary
- **ASME Approved:** Yes

CFM

- 13.4 CFM's @ 40 PSI
- 11.5 CFM's @ 90 PSI

Pressure

- **Operating Pressure:** 125-155 PSI
- **Maximum Pressure:** 155 PSI

Power

- **Source:** Electric
- **Horsepower:** 3.7
- **Engine Manufacturer:**
- **Volt/Amp/Phase:** 208/240/0/

Sizing

- **Dimensions** (LxWxH): 30 x 27 x 68
- **Weight:** 247 Pounds

- **Limited Warranty:** 2 year limited
- **Certification:** CSA,UL

Accessories

- **Included:** No

Owners Manual (PDF)

FEATURED ACCESSORIES

COOPER Notification

Series MT and MT Strobe Multitone Electronic Appliances

SERIES MT STROBE

MT4-115-WH

SERIES MT-12/24

Description:

The Wheelock Series MT and MT Strobe Multitone electronic appliances offer a choice of eight (8) nationally and internationally recognized alerting sounds: Horn, Bell, March Time Horn, Code-3 Tone, Code-3 Horn, Slow Whoop, Siren or Hi/Lo Tone. The Code-3 Horn and tone patterns are engineered to comply with NFPA/ANSI Temporal Pattern specifications without requiring additional equipment. With MT and MT Strobe appliances, one alarm appliance meets most of your signaling needs. The MT strobes can be synchronized using the Wheelock SM, DSM Sync Modules, Wheelock Power Supplies or other manufacturers panel incorporating the Wheelock Patented Sync Protocol.

The MT Strobes are designed for ADA applications while meeting or exceeding the latest requirements of NFPA 72, ANSI 117.1, UFC and UL Standard 1971 as well as meeting ADA requirements concerning photosensitive epilepsy.

Each MT and MT Strobe appliance has two installer selective sound output levels: STANDARD dBA and HIGH dBA. Non-strobe versions provide selectable voltage capability in one unit, 12VDC or 24VDC. Strobe versions are specific for either 12VDC or 24VDC and all models may be used with filtered or unfiltered (full-wave-rectified) input voltages. Separate input terminals are available, shunt wires are provided to enable both tone and strobe to operate simultaneously from a single input.

The Series MT Multitone Strobe appliances are UL Listed for indoor wall mount applications under Standard 1971 for Signaling Devices for the Hearing Impaired and under Standard 464 for Audible Signaling Appliances.

Features:

- Approvals include: UL Standard 1971, UL Standard 464, California State Fire Marshal (CSFM), New York City (MEA), Factory Mutual (FM) and Chicago (BFP) See approvals by model in Specifications and Ordering Information
- Designed to meet or exceed ADA/NFPA/UFC/ANSI Standards and Accessibility Guidelines
- Complies with OSHA 29, Part 1910.165
- Series MT appliances have IN and OUT wiring terminations that accept two #12 to #18 American Wire Gauge (AWG) wires at each terminal. Inputs are polarized for compatibility with standard reverse polarity type supervision
- One alarm appliance with (8) eight selective signals to provide superior sound penetration for various ambient and wall conditions with two field selectable sound output levels
- Code-3 Horn and Tone meet ANSI/NFPA temporal pattern for standard emergency evacuation signaling
- Audible and strobe can operate from a single NAC circuit or from separate NAC circuits with any of the (8) eight audible sounds
- MT Strobe models are available with Wheelock patented MCW Multi-Candela strobes with field selectable candela settings at 15/30/75/110cd or with single candela 1575cd strobes. Synchronize using the Wheelock Sync Modules or panels with built-in Wheelock Patented Sync Protocol
- Selectable input voltage on non-strobe versions. Strobe versions are factory set for either 12 or 24VDC, with wide-Listed voltage range, filtered (DC) and FWR
- No additional trimplate required for flush mounting

For Weatherproof MTWP See Data Sheet S9004

E5946

THE CITY OF NEW YORK DEPARTMENT OF BUILDINGS MEA 151-92-E

7135-0785:118 (MT4)
7125-0785:155 (MT)
7125-0758:156 (MTWP)

FM APPROVED

NOTE: All CAUTIONS and WARNINGS are identified by the symbol ⚠. All warnings are printed in bold capital letters .
⚠ WARNING: PLEASE READ THESE SPECIFICATIONS AND INSTALLATION INSTRUCTIONS CAREFULLY BEFORE USING, SPECIFYING OR APPLYING THIS PRODUCT. FAILURE TO COMPLY WITH ANY OF THESE INSTRUCTIONS, CAUTIONS AND WARNINGS COULD RESULT IN IMPROPER APPLICATION, INSTALLATION AND/OR OPERATION OF THESE PRODUCTS IN AN EMERGENCY SITUATION, WHICH COULD RESULT IN PROPERTY DAMAGE, AND SERIOUS INJURY OR DEATH TO YOU AND/OR OTHERS.

General Notes:

- Strobes are designed to flash at 1 flash per second minimum over their "Regulated Voltage Range" (16-33v for 24VDC units and 8-17.5v for 12VDC units). Regulated Voltage Range is the newest terminology used by UL to identify the listed voltage range.
- All candela ratings represent minimum effective Multitone Strobe intensity based on UL Standard 1971.
- MT Strobe models are UL Standard 1971 Listed for indoor use with a temperature range of 32°F to 120°F (0°C to 49°C) and maximum humidity of 93% ±2%. The MT-12/24, MTWP and MT4 models and listed for outdoor use at -31°F to 150°F (-35°C to 66°C) and maximum humidity of 95% (See Data Sheet S9004 or Installation Instruction Sheet P84150 for more detail on MTWP). MTWP and MT4 strobes are listed under UL 1638.
- MT Audible is UL Standard 464 Listed.

Alarm Tones

TONE	ALARM TONES PATTERN DESCRIPTION
HORN	BROADBAND HORN (Continuous)
BELL	1560 Hz MODULATED (0.07 sec. ON/Repeat)
MARCH TIME HORN	HORN (0.25 sec. ON/0.25 sec. OFF/Repeat
CODE-3 HORN	HORN (ANSI S3.41 Temporal Pattern)
CODE-3 TONE	500 Hz (ANSI S3.41 Temporal Pattern)
SLOW WHOOP	500-1200 Hz SWEEP (4.0 sec. ON/0.5 sec. OFF/Repeat)
SIREN	600-1200 Hz SWEEP (1.0 sec. ON/Repeat)
HI/LO	1000/800 Hz (0.25 sec. ON/Alternate)

Table 1: dBA and Current Ratings for Multitone Audible Portion

	RMS Current (amps)										dBA @ 10ft (UL Reverberant)					
	24 VDC				12 VDC				120 VAC		24 VDC		12 VDC		120 VAC	
	HI Output		STD Output		HI Output		STD Output		HI Output	STD Output	HI Output	STD Output	HI Output	STD Output	HI Output	STD Output
	@ 24 VDC	UL max*	@ 24 VDC	UL max*	@ 24 VDC	UL max*	@ 24 VDC	UL max*	UL max*	UL max*						
Horn	0.074	0.108	0.033	0.044	0.145	0.176	0.023	0.034	0.050	0.042	92	87	90	77	85	82
Bell	0.040	0.053	0.018	0.024	0.077	0.095	0.014	0.020	0.041	0.039	86	80	85	69	82	75
March Time Horn	0.067	0.104	0.033	0.038	0.109	0.142	0.023	0.034	0.050	0.040	89	84	89	74	85	79
Code-3 Horn	0.069	0.091	0.026	0.035	0.100	0.142	0.023	0.034	0.050	0.042	88	83	88	73	82	75
Code-3 Tone	0.061	0.075	0.026	0.035	0.088	0.105	0.015	0.021	0.042	0.040	85	80	84	70	79	75
Slow Whoop	0.069	0.098	0.028	0.037	0.100	0.142	0.025	0.035	0.050	0.042	90	89	89	75	85	82
Siren	0.080	0.104	0.027	0.036	0.122	0.152	0.021	0.030	0.045	0.041	89	84	89	75	85	82
HI/LO	0.044	0.057	0.020	0.026	0.089	0.114	0.018	0.026	0.042	0.039	86	81	86	71	82	79

Table 2: Strobe Current Ratings

	RMS Current (amps)						
Model	MT-121575	MT-241575	MTWP-2475	MT-24MCW			
Candela	1575cd	1575cd	180cd	15cd	30cd	75cd	110cd
@ 24VDC	0.152	0.060	0.094	0.041	0.063	0.109	0.140
UL max*	0.255	0.090	0.138	0.060	0.092	0.165	0.220

Note: If the strobe and audible operate on the same circuit, add the strobe current from Table 2 to the audible current from Table 1.

* RMS current ratings are per UL average RMS method. UL max current rating is the maximum RMS current within the listed voltage range (16-33v for 24v units). For strobes the UL max current is usually at the minimum listed voltage (16v for 24v units). For audibles the max current is usually at the maximum listed voltage (33v for 24v units). For unfiltered FWR ratings, see installation instructions.

Wiring Diagrams (for all models)

MT SIGNAL

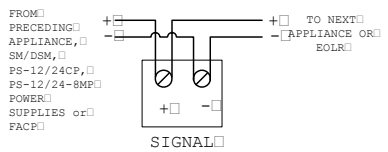

AUDIBLE SIGNAL AND STROBE OPERATE INDEPENDENTLY

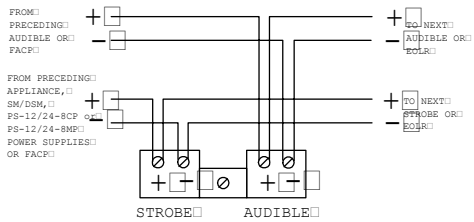

AUDIBLE SIGNAL AND STROBE OPERATE IN UNISON. RED AND BLACK SHUNT-WIRES ARE SUPPLIED.

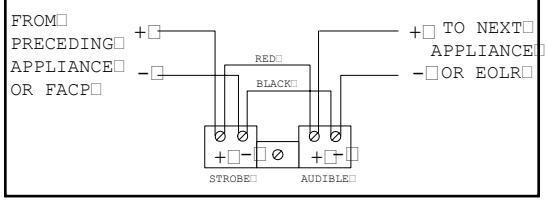

Specifications and Ordering Information

Model Number	Order Code	Input Voltage	Rated Candela	Mounting Options***	Agency Approvals				
					UL	MEA	CSFM	FM	BFP
MT-12/24-R	5023	12/24	-	D,E,F,L,M,O,P,R	X	X	X	X	X
MT-12/24-W	5024	12/24	-	D,E,F,L,M,O,P,R	X	X	X	X	X
MT-241575W-FR#	8422	24	15 (75 on AXIS)	D,E,F,L,M,O,P,R	X	X	X	X	*
MT-24MCW-FR	3301	24	15/30/75/110	D,E,F,L,M,O,P,R	X	*	X	*	*
MT-24MCW-FW	3303	24	15/30/75/110	D,E,F,L,M,O,P,R	X	*	X	*	*
MT-121575W-FR#	8421	12	15 (75 on AXIS)	D,E,F,L,M,O,P,R	X	X	X	X	*
MT-121575W-NW	9747	12	15 (75 on AXIS)	D,E,F,L,M,O,P,R	X	X	X	X	*
MTWP-2475W-FR**	8420	24	180 @ 77°F (25°C)	M	X	X	X	X	*
MTWP-2475W-NW**	9744	24	180 @ 77°F (25°C)	M	X	X	X	X	*
MT4-115-R	6223	120 VAC	-	D,E,J,K,N,O,R	X	X	X	X	X
MT4-115-S	6142	120 VAC	-	D,E,J,K,N,O,R	X	X	X	X	X
MT4-115-WH-VFR##	6224	120 VAC	15	D,E,J,K,N,O,R	X	X	X	X	X
MT4-12/24-R	5308	12/24	-	D,E,J,K,N,O,R	X	*	*	*	*
MT4-12/24-S	7997	12/24	-	D,E,J,K,N,O,R	X	*	*	*	*

NOTE: **MTWP-2475W is Weatherproof and rated for 180 cd @ 77°F (25°C). See Data Sheet S9004 or Installation Instruction P84150.
***For additional information on mounting please refer to Data Sheet S7000.
1575 strobes are UL Listed for 15cd with 75cd on AXIS.
Series WH Strobe is listed for UL Standard 1638 only. See Instruction Sheet P83160.

*Pending

⚠WARNING: CONTACT WHEELOCK FOR THE CURRENT "INSTALLATION INSTRUCTIONS" P82467 MT-12/24, P84155 MT w/Strobe P84150 MTWP WEATHERPROOF "GENERAL INFORMATION" SHEET (P82380) ON THESE PRODUCTS. THESE DOCUMENTS DO UNDERGO PERIODIC CHANGES. IT IS IMPORTANT THAT YOU HAVE CURRENT INFORMATION ON THESE PRODUCTS. THESE MATERIALS CONTAIN IMPORTANT INFORMATION THAT SHOULD BE READ PRIOR TO SPECIFYING OR INSTALLING THESE PRODUCTS, INCLUDING:

- **TOTAL CURRENT REQUIRED BY ALL APPLIANCES CONNECTED TO SYSTEM SECONDARY POWER SOURCES.**
- **FUSE RATINGS ON NOTIFICATION APPLIANCE CIRCUITS TO HANDLE PEAK CURRENTS FROM ALL APPLIANCES ON THOSE CIRCUITS.**
- **COMPOSITE FLASH RATE FROM MULTIPLE STROBES WITHIN A PERSON'S FIELD OF VIEW.**
- **THE VOLTAGE APPLIED TO THESE PRODUCTS MUST BE WITHIN THEIR RATED INPUT VOLTAGE RANGE.**
- **INSTALLATION IN OFFICE AREAS AND OTHER SPECIFICATION AND INSTALLATION ISSUES.**
- **USE STROBES ONLY ON CIRCUITS WITH CONTINUOUSLY APPLIED OPERATING VOLTAGE. DO NOT USE STROBE ON CODED OR INTERRUPTED CIRCUITS IN WHICH THE APPLIED VOLTAGE IS CYCLED ON AND OFF AS THE STROBE MAY NOT FLASH.**
- **FAILURE TO COMPLY WITH THE INSTALLATION INSTRUCTIONS OR GENERAL INFORMATION SHEETS COULD RESULT IN IMPROPER INSTALLATION, APPLICATION, AND/OR OPERATION OF THESE PRODUCTS IN AN EMERGENCY SITUATION,WHICH COULD RESULT IN PROPERTY DAMAGE AND SERIOUS INJURY OR DEATH TO YOU AND/OR OTHERS.**
- **CONDUCTOR SIZE (AWG), LENGTH AND AMPACITY SHOULD BE TAKEN INTO CONSIDERATION PRIOR TO DESIGN AND INSTALLATION OF THESE PRODUCTS, PARTICULARLY IN RETROFIT INSTALLATIONS.**

Wheelock products must be used within their published specifications and must be PROPERLY specified, applied, installed, operated, maintained and operationally tested in accordance with their installation instructions at the time of installation and at least twice a year or more often and in accordance with local, state and federal codes, regulations and laws. Specification, application, installation, operation, maintenance and testing must be performed by qualified personnel for proper operation in accordance with all of the latest National Fire Protection Association (NFPA), Underwriters' Laboratories (UL), National Electrical Code (NEC), Occupational Safety and Health Administration (OSHA), local, state, county, province, district, federal and other applicable building and fire standards, guidelines, regulations, laws and codes including, but not limited to, all appendices and amendments and the requirements of the local authority having jurisdiction (AHJ).

Architects and Engineers Specifications

The notification appliance shall be a Wheelock Series MT audible/visual appliance or equivalent. Notification appliance shall be electronic and use solid state components. Electromechanical alternatives are not approved. Each electronic appliance shall provide eight (8) field selectable alarm tones. The tones shall consist of: HORN, BELL, MARCH TIME HORN, CODE-3 HORN, CODE-3 TONE, SLOW WHOOP, SIREN and HI/LO. Tone selection shall be by durable dip switch assembly and not clips or jumpers. The Multitone Audible appliance shall be UL Listed under Standard 464 for Audible Signal Appliances. The audible and the strobe shall be able to operate from a single NAC circuit while producing any of these tones. The appliance shall provide two output sound levels: STANDARD and HIGH dBA. The HIGH dBA setting shall provide a minimum 5 dBA increase in sound output at nominal voltage. The HIGH anechoic dBA measurement at 10 feet at the alarm HORN SETTING shall be 99 dBA minimum. Operating voltages shall be either 12 VDC or 24 VDC using filtered power or unfiltered power supply (full-wave-rectified). All models shall have provisions for standard reverse polarity type supervision and IN/OUT field wiring using terminals that accept #12 to #18 AWG wiring.

Combination audible/visual appliances shall incorporate a Xenon flashtube enclosed in a rugged Lexan® lens or equivalent with solid state circuitry. Strobe shall produce a flash rate of one (1) flash per second minimum over the voltage range. The MT strobe intensity shall be rated per UL and Listed under Standard 1971 for Signaling Devices for the Hearing Impaired for 1575cd multi-candela with field selectable 15/30/75/110 candela settings. The 1575 candela strobe shall be specified when 15 candela or with 75 candela intensity on-axis is required. Strobe Models shall incorporate circuitry for synchronized strobe flash and shall be designed for compatibility with Wheelock SM, DSM Sync Modules, Wheelock Power Supplies or other manufacturers panels with built-in Wheelock Patented Sync Protocol. The strobes shall not drift out of synchronization at any time during operation. If the module fails to operate (i.e., contacts remain closed), the strobes shall revert to a non-synchronized default flash rate. Strobe activation shall be via independent input or from the same input circuit as the audible.
The combination audible/visual appliances shall be installed indoors and may be surface or flush mounted. They shall mount to standard electrical hardware requiring no additional trimplate or adapter. The aesthetic appearance shall not have any mounting holes or screw heads visible when the installation is completed. The appliance shall be finished in a textured red color.

The Series MT-12/24, MTWP and MT4 appliances may be installed indoor or outdoor with the proper back box.

NOTE: Due to continuous development of our products, specifications and offerings are subject to change without notice in accordance with Wheelock Inc. standard terms and conditions.

NEMA Member

WE ENCOURAGE AND SUPPORT NICET CERTIFICATION
3 YEAR WARRANTY
Made in USA

S2000 MT 10/07

NJ Location
273 Branchport Ave.
Long Branch, NJ 07740
P: 800-631-2148
F: 732-222-8707
www.coopernotification.com

FL Location
7565 Commerce Ct.
Sarasota, FL 34243
P: 941-487-2300
F: 941-487-2389

VA Location
P: 877-459-7726
F: 703-294-6560

Cooper Notification is Wheelock® MEDC SAFEPATH® WAVES Roam Secure

COOPER Notification

STORE CLEANOUTS

834-4PNR

ON-GRADE ADJUSTABLE CLEANOUT

834 series — Finish Line™

Item # Submitted	
Job Name	
Location	
Engineer	
Contractor	
PO#	TAG

SPECIFICATION

Sioux Chief 834 series Finish Line adjustable on-grade cleanout shall be used where necessary in drainage systems. Cleanout shall allow adjustment of 1.25" before the concrete pour, and 1.25" after the concrete pour. Cleanout shall have a Sch. 40 hub connection, which conforms to ASTM D2665 (PVC) or D2661 (ABS). Connection to drainage system shall be made with a solvent weld joint to ABS/PVC pipe. Cleanout cover shall meet applicable load requirements for intended use. Cleanout shall include a 3 ½" slotted, polypropylene cleanout plug, situated in base adapter.

834-4PNQ

MATERIALS

ring/cover: nickel-bronze, 304 stainless steel, tenzalloy
head adapter: ABS with threaded brass inserts
coring sleeve: ABS
coring plug: high-impact polymer
cleanout plug: slotted, polypropylene
base adapter: ABS or PVC

COVER LOAD RATING

nickel: 4,000 lbs. (medium duty)
stainless steel: 4,000 lbs. (medium duty)
tenzalloy: 1,250 lbs. (light duty)

DIMENSIONS

A: connection size	3" or 4" Sch. 40 hub
B: ring/cover diameter	
round	6½"
square	6 11/16"
C: adapter height	
3" hub	4⅜"
4" hub	4⅝"
D: pre-pour adjustable height	
3" hub	5¼"–6½"
4" hub	5½"–6¾"
E: post-pour adjustable height	0"–1¼"
F: cleanout plug	3½" MIP thread

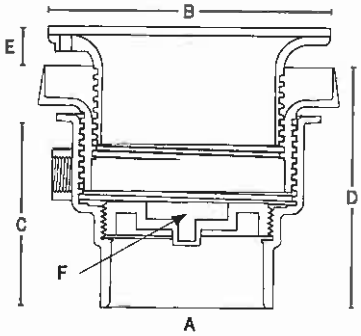

Models 834-3DiR, 834-3DNQ, 834-3DNR, 834-4DiR, 834-4DNQ, 834-4DNR are UPC listed

Create Item Number

834-ABCD

e.g. 834-4PNR = Finish Line cleanout with 4" Sch. 40 hub connection with round nickel-bronze ring and cover

A — CONNECTION SIZE
- ☐ 3 — 3" Sch. 40 hub
- ☐ 4 — 4" Sch. 40 hub

B — CONNECTION TYPE
- ☐ A — ABS base adapter
- ☐ P — PVC base adapter

C — RING & COVER
- ☐ NR — round nickel-bronze
- ☐ NQ — square nickel-bronze
- ☐ SR — round stainless steel
- ☐ SQ — square stainless steel
- ☐ TR — round tenzalloy
- ☐ TQ — square tenzalloy

D — OPTIONS (FACTORY INSTALLED)
- ☐ V — vandal-resistant cover screws
- ☐ S — stamped cover, specify letters
- ☐ Z — complies with the Buy American Act[1]
- ☐ C — carpet marker

1 only available on cleanouts with round nickel covers

ACCESSORIES
- ☐ 832-S4 — shim kit
- ☐ 832-EX4 — ductile iron extension nipple
- ☐ 832-W — locating bristle kit

STORE DRAINS

832-4PNR

ON-GRADE ADJUSTABLE FLOOR DRAIN

832 series — Finish Line™

Item # Submitted	
Job Name	
Location	
Engineer	
Contractor	
PO#	TAG

SPECIFICATION

Sioux Chief 832 series Finish Line adjustable on-grade floor drain shall be used where necessary in drainage systems. Floor drain shall allow adjustment of 1.25" before the concrete pour, and 1.25" after the concrete pour. Floor drain shall have a Sch. 40 hub connection, which conforms to ASTM D2665 (PVC) or D2661 (ABS). Connection to drainage system shall be made with a solvent weld joint to ABS/PVC pipe. Strainer of floor drain shall fasten into female threaded brass inserts. Strainer shall be heel-proof and meet applicable load requirements for intended use. Trap primer port shall be threaded ½" FIP for knockout connection.

832-4PNQ

MATERIALS

ring/strainer: nickel-bronze, 304 stainless steel
head adapter: ABS with threaded brass inserts
coring sleeve: ABS
coring plug: high-impact polymer
base adapter: ABS or PVC

STRAINER LOAD RATING

nickel-bronze: 1,000 lbs. (light duty, pedestrian traffic)
stainless steel: 2,000 lbs. (light duty, pedestrian traffic)

STRAINER FREE-AREA

round: 11.75 in²
square: 16.4 in²

DIMENSIONS

A: connection size	2"*, 3", or 4" Sch. 40 hub
B: ring/strainer diameter	
round	6½"
square	7"
C: adapter height	
2" hub	4⅝"
3" hub	4⅜"
4" hub	4⅝"
D: pre-pour adjustable height	
2" hub	5½"–6¾"
3" hub	5¼"–6½"
4" hub	5½"–6¾"
E: post-pour adjustable height	
round	0"–1¼"
square	5/16"–1¼"
F: trap primer port	½" FIP thread for knockout connection

*2" hub connection is factory installed 2" × 3" bushing in 3" hub model.

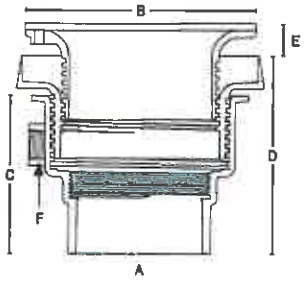

Models 832-2ANR, 832-2PNR, 832-2ANQ, 832-2PNQ, 832-36ANR, 832-36PNR, 832-36ANQ, and 832-36PNQ are UPC listed

Create Item Number

832-ABCD

e.g. 832-36PNR = Finish Line drain with 3" Sch. 40 hub connection with round nickel-bronze ring and strainer

A — CONNECTION SIZE
- ☐ 2 — 2" Sch. 40 hub
- ☐ 36 — 3" Sch. 40 hub
- ☐ 4 — 4" Sch. 40 hub

B — CONNECTION TYPE
- ☐ A — ABS base adapter
- ☐ P — PVC base adapter

C — RING & STRAINER
- ☐ NR — round nickel-bronze
- ☐ NQ — square nickel-bronze
- ☐ SR — round stainless steel
- ☐ SQ — square stainless steel

D — OPTIONS (FACTORY INSTALLED)
- ☐ V — vandal-resistant strainer screws
- ☐ E — 1⅜" extended strainer rim [1]
- ☐ H — hinged strainer
- ☐ B — complies with Buy American Act [1]

1 Available only on round nickel-bronze ring & strainer.

ACCESSORIES
- ☐ 832-UM — stainless steel debris bucket
- ☐ 832-S4 — shim kit
- ☐ 863-FA — aluminum condensate funnel
- ☐ 863-FN — nickel-bronze condensate funnel
- ☐ 863-FNO — oval nickel-bronze condensate funnel
- ☐ 832-EX4 — ductile iron extension nipple
- ☐ 832-W — locating bristle kit

GARDEN CENTER DRAINS

842-4PI

ON-GRADE ADJUSTABLE FLOOR DRAIN

842 series

Item # Submitted _____
Job Name _____
Location _____
Engineer _____
Contractor _____
PO# _____ TAG _____

SPECIFICATION

Sioux Chief 842 Series adjustable floor drain shall be used where necessary in drainage systems. Floor drain shall have a Sch. 40 hub connection, which conforms to ASTM D2665 (PVC) or D2661 (ABS). Connection to drainage system shall be made with a solvent weld joint to ABS/PVC pipe. Strainer of floor drain shall fasten into female threaded brass inserts. Strainer shall meet applicable load requirements for intended use. Trap primer port shall be threaded ½" FIP for knockout connection.

842-36PI

MATERIALS

ring/strainer: cast iron
top housing: ABS with threaded brass inserts
adapter body: ABS or PVC

STRAINER LOAD RATING

cast iron strainer: 7,500 lbs. (heavy duty)

STRAINER FREE-AREA

2" drain	6.81 in²
3" drain (standard top)	6.81 in²
3" drain (large top)	9.58 in²
4" drain	9.58 in²

DIMENSIONS

A: connection size	2" × 3", 3" × 4", or 4" Sch. 40 hub *
B: top diameter	
2" drain	6⅛"
3" drain (standard top)	6⅛"
3" drain (large top)	6⅝"
4" drain	6⅝"
C: overall height	
2" drain	4¾"–5½"
3" drain (standard top)	4¾"–5½"
3" drain (large top)	5½"–6⅝"
4" drain	5¾"–6⅞"
D: trap primer port	½" FIP thread for knockout connection

* Adapters fit over 2"/inside 3" pipe, or over 3"/inside 4" pipe

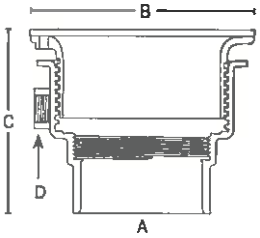

ONLY Items 842-4Pi and 842-4AI are UPC listed

Create Item Number

842-AB

e.g. 842-36Pi = 3" PVC drain with large top round cast iron strainer and ring

A CONNECTION
- ☐ 2 2" Sch. 40 hub
- ☐ 3 3" Sch. 40 hub (standard top)
- ☐ 36 3" Sch. 40 hub (large top)
- ☐ 4 4" Sch. 40 hub

B ADAPTER
- ☐ Ai ABS adapter
- ☐ Pi PVC adapter

ACCESSORIES
- ☐ 863-FA aluminum condensate funnel
- ☐ 863-FN nickel condensate funnel
- ☐ 863-FNO oval nickel condensate funnel
- ☐ 842-UM 4⅝" stainless steel sediment screen [1]

1 use with 842-4_ or 842-36_ only

GENERAC® | INDUSTRIAL POWER

100 - 400 Amps, 600 VAC

Automatic Transfer Switches

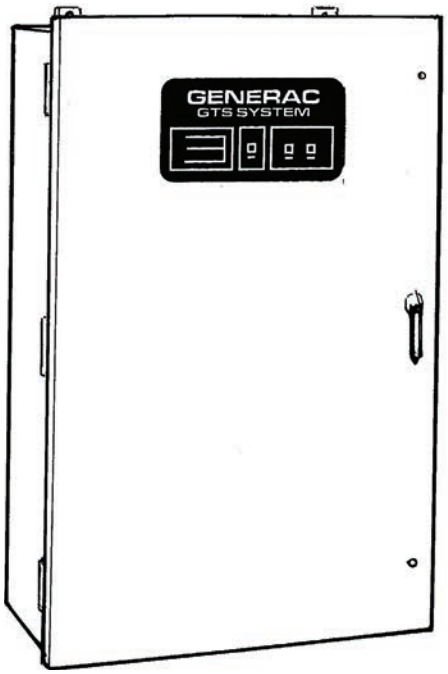

- **Standard time delay neutral will reduce switchover problems.**
- **Logic control with inphase monitor regulates switch functions and allows adjustable switch settings with LED indicators.**
- **Control switches located on the front of the door for ease of operation.**
- **All switches are UL 1008 listed and CSA certified.**
- **Electrically-operated, mechanically-held and interlocked main contacts with break before make design for fast, positive connections.**
- **Rated for all classes of load, 100% equipment rated, both inductive and resistive with no derations.**
- **2, 3, and 4 Pole 600 VAC contactors.**
- **160 millisecond transfer time.**

Standard Features

- Single coil design, electrically operated and mechanically held
- Programmable exerciser
- Main contacts are silver alloy to resist welding and sticking
- Conformal coating protects all printed circuit boards
- Indicating LED's for switch position—Normal, Emergency, and Standby Operating
- NEMA 1 enclosure with hinged door and key-locking handle
- Three-position switch—Fast Test, Auto, Normal Test
- Arc chutes on main contacts

Optional Accessories

- NEMA 12 enclosure
- NEMA 3R enclosure
- NEMA 4 & 4X enclosure
- Exterior AC meter package
- Controls accessible through door in door design on NEMA type 3R and 4 enclosures – key lock provided on access door
- 4-pole design for neutral isolation
- Single or double sets of auxiliary contacts
- Preferred source selector switch
- Manual 3 position selector switch
- Remote automatic control circuit
- Signal before transfer contacts
- Return to normal timer bypass

GENERAC | INDUSTRIAL POWER

GTS Control Systems

LOGIC CONTROL w / Inphase Monitor	
Utility Voltage	
Dropout	75-95% (Adj.)
Pickup	85-95% (Adj.)
Line Interrupt	0.1-10 Sec. (Adj.)
Engine Minimum Run	5-30 Min. (Adj.)
Engine Warmup	5 Sec.-3 Min. (Adj.)
Return to Utility	1-30 Min. (Adj.)
Engine Cooldown	1-30 Min. (Adj.)
Standby Voltage	85-95% (Adj.)
Standby Frequency	80-90% (Adj.)
Time Delay Neutral	0.1-10 Sec. (Adj.)
Transfer on Exercise	On/Off Switch
Warmup Timer Bypass	On/Off Switch
Time Delay Neutral Bypass	On/Off Switch
Inphase Monitor	On/Off Switch

Withstand Current - 600 Volt GTS Series

GTS Rated Amps	100	150	200	300	400
FUSE PROTECTED					
Maximum RMS Symmetrical Fault Current – Amps	200,000	200,000	200,000	200,000	200,000
Maximum Fuse Size – Amps	200	400	400	600	600
Fuse Class	J,T	J,T	J,T	J,T	J,T
CIRCUIT BREAKER PROTECTED (See separate sheet for specific circuit breakers)					
Maximum RMS Symmetrical Fault Current – Amps	14,000	25,000	25,000	35,000	35,000
Protective Device Continuous Rating (Max) – Amps	150	300	300	600	600

- Tested in accordance with the withstand and closing requirements of UL 1008 and CSA Standards
- Current ratings are listed @ 480 VAC

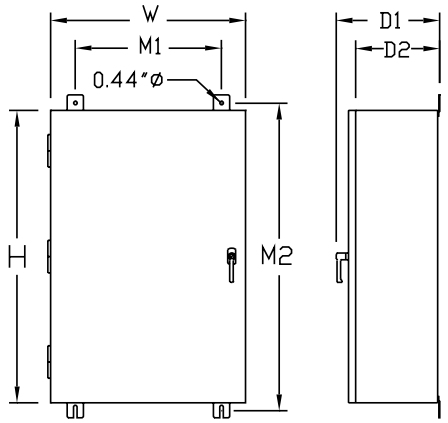

Unit Dimensions

GTS Rated Amps	Voltage	Enclosure Height H	Enclosure Width W	Wall Mount Bolt Pattern M1	Wall Mount Bolt Pattern M2	Enclsoure Depth D1	Enclsoure Depth D2	Weight (lbs.)
100	All	36	24	18	37.5	12.7	10	180
150-200	120/240	36	24	18	37.5	12.7	10	185
150-200	120/208	36	24	18	37.5	12.7	10	185
150-200	277/480	48*	30*	24	49.5	14.8	12	265
150-200	600	48*	30*	24	49.5	14.8	12	265
300-400	120/240	36	24	18	37.5	12.7	10	245
300-400	120/208	36	24	18	37.5	12.7	10	245
300-400	277/480	48*	30*	24	49.5	14.8	12	325
300-400	600	48*	30*	24	49.5	14.8	12	325

* Note: On NEMA 1 enclosures only, door overlaps enclosure – door dimensions are 48.8 H X 30.8 W. All dimensions in inches.

Terminal Lug Wire Ranges

GTS RATED AMPS	CONTACTOR TERMINALS (1 LUG PER POLE) LUG WIRE RANGE	NEUTRAL BAR* # LUGS	NEUTRAL BAR* LUG WIRE RANGE	GROUND LUG (1 PROVIDED) LUG WIRE RANGE
100	2/0 – 14 AWG	4	2/0 – 14 AWG	2/0 – 14 AWG
150	400MCM – 4 AWG	4	350MCM – 6 AWG	350MCM – 6 AWG
200	400MCM – 4 AWG	4	350MCM – 6 AWG	350MCM – 6 AWG
300	600MCM – 4 AWG or 2 – [250MCM – 1/0 AWG]	4	600MCM – 4 AWG [250MCM – 1/0 AWG]**	350MCM – 6 AWG 350MCM – 6 AWG
400	600MCM – 4 AWG or 2 – [250MCM – 1/0 AWG]	4	600MCM – 4 AWG [250MCM – 1/0 AWG]**	350MCM – 6 AWG

* Not included in GTS with switched neutral. ** Allowable wire range in brackets is for 2 wires per lug.

©2013 Generac Power Systems, Inc. All rights reserved. All specifications are subject to change without notice. Bulletin 094700000S-B / Printed in U.S.A. 06/25/13

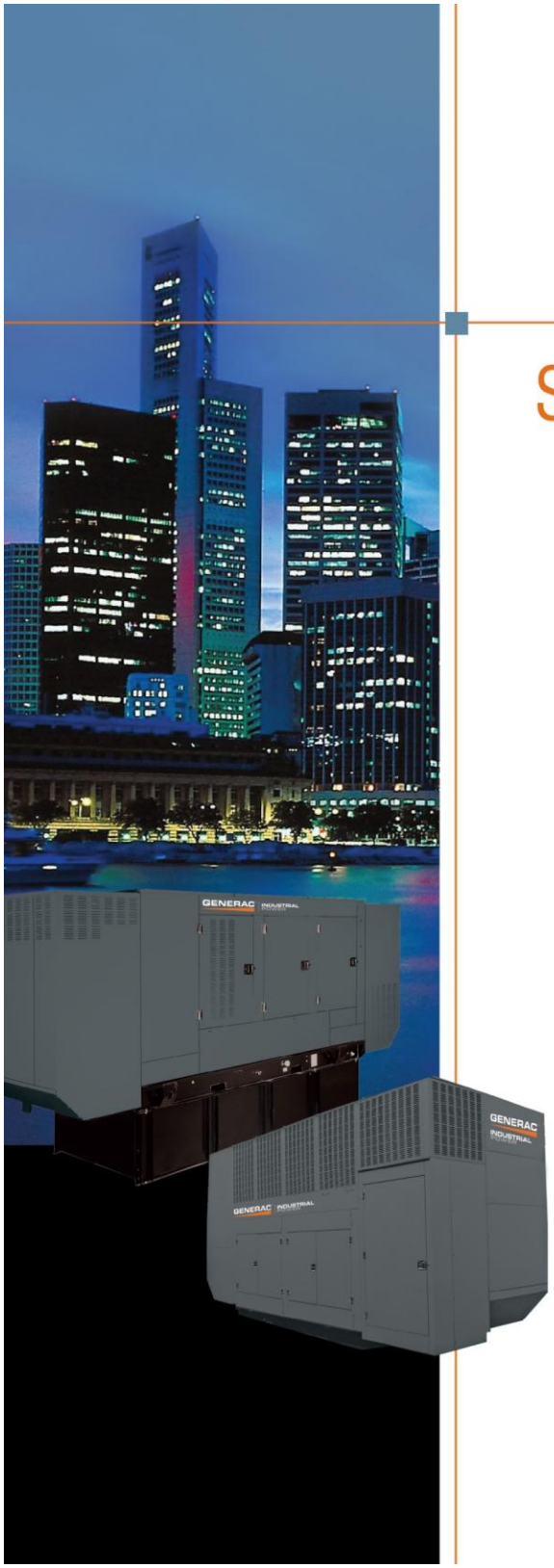

May 1, 2014

SUBMITTAL PACKAGE

2014 Menard, Inc. New Store Bid

Prepared by: Meghan Burke
National Account Manager
Office: 262-544-4811 Ext. 4086
Mobile: 262-442-1935

GENERAC | INDUSTRIAL POWER

Generac Power Systems, Inc.
S45 W29290 Hwy. 59
Waukesha, Wisconsin 53189

P (262) 544-4811
F (262) 968-3791

Date: May 1, 2014

To: Menard, Inc

Attn:

Reference: Menard, Inc. NG100kW 4-16-14 Bid

We are pleased to offer the following quote for the 2014 New Store Bid. In an effort to provide competitive pricing, we analyzed your discounts from 2009 – 2013, while taking into consideration operating and material cost increases over the past 5 years. In 2014, Generac has committed to an increase in service levels offered to National accounts. We look forward to providing strategic partnership and working with Menards' to achieve your business continuity plans.

Quantity 1 - Generac industrial gas engine driven generator, naturally aspirated 9.0L V-8 engine, consisting of the following features and accessories:

- Fuel system - **Natural gas**
- SG0100GG189.0N18HPYYE
- Stationary Emergency-Standby rated
- **100 kW** Rating , synchronous alternator, wired for 120/208 VAC 3 Phase, 60 HZ
- Permanent magnet excitation
- H-100 Control Panel
    - Meets NFPA 99 and 110 requirements
    - Temp Range -40 to 70 degrees C
    - Digital microprocessor:
        - Two 4 line x 20 displays, full system status
        - 3 phase sensing, +/-0.25% digital voltage regulation
        - RS232, RS485 and Canbus remote ports
        - Waterproof connections
        - All engine sensors are 4-20 ma for minimal interference
        - Programmable I/O
        - Built-in PLC for special applications
    - Engine function monitoring and control:
        - Full range standby operation; Programmable auto crank, Emergency Stop, Auto-Off-Manual switch
        - Isochronous governor, +/-0.25% frequency regulation
        - Full system status on all AC output and engine function parameters
        - Service reminders, trending, fault history (alarm log)
        - I2T function for full generator protection
        - Selectable low-speed exercise
    - HTS transfer switch function monitoring and control
    - 2-wire start controls for any 2-wire transfer switch
- Electronic governor Frequency regulation, isochronous Steady state regulation +/-0.25%
- 400A UL mainline circuit breaker
- Standard weather protective enclosure
    - Industrial Grey enclosure, powder paint finish

Generac Power Systems, Inc.
S45 W29290 Hwy. 59
Waukesha, Wisconsin 53189

P (262) 544-4811
F (262) 968-3791

- Catalyst muffler - installed
- 110AH, 925 CCA, group 31
    - battery w/rack-installed
- 10AMP battery charger-installed
- Battery charging alternator
- Battery cables
- Battery tray
- Fuel shut-off solenoid valve
- Solenoid activated starter motor
- Air cleaner and oil filter with internal bypass
- Oil and antifreeze
- Oil and radiator drain extensions
- Vibration isolators between engine/alternator and base frame
- Standard flex exhaust
- Air duct adapter
- Block Heater 1500W
- 21 Light remote annunciator - surface mount
- 120V GFCI & 240V Outlet
- Standard set of 3 manuals
- Listed to standard UL2200
- EPA Certified
- Flex fuel line
- STD 2-year limited warranty
- Standard Electronic Governor
- SCAQMD Compliant

Generac Power Systems, Inc.
S45 W29290 Hwy. 59
Waukesha, Wisconsin 53189

P (262) 544-4811
F (262) 968-3791

Quantity 1 - 1 One automatic transfer switch consisting of the following typecode and components:

- GTS010W-3G2LDNAY
- Rated at **100 amps**, 3 Pole constructionOperating at 60 HZ, 208 Volts 3 phase, with 2-wire start circuit
- Utility voltage sensing controls: * Drop-out and pick-up * Utility interrupt delay
- Adjustable logic controls * Minimum standby voltage * Minimum standby frequency * Engine warmup * Inphase monitor * Time delay neutral * Return to utility * Engine cooldown * Transfer on exercise
- Remote auto control
- NEMA 1 Enclosure
- Standard set of 3 manuals
- UL 1008 listed
- CSA Certified
- Standard 2 Year warranty

Quantity 1 - 1 One automatic transfer switch consisting of the following typecode and components:

- GTS030W-3G2LDNAY
- Rated at **300 amps**, 3 Pole constructionOperating at 60 HZ, 208 Volts 3 phase, with 2-wire start circuit
- Utility voltage sensing controls: * Drop-out and pick-up * Utility interrupt delay
- Adjustable logic controls * Minimum standby voltage * Minimum standby frequency * Engine warmup * Inphase monitor * Time delay neutral * Return to utility * Engine cooldown * Transfer on exercise
- Remote auto control
- NEMA 1 Enclosure
- Standard set of 3 manuals
- UL 1008 listed
- CSA Certified
- Standard 2 Year warranty

Notes

Estimated Delivery: Shipping lead time is 6 weeks
Prices valid until 12/31/14
FOB: Jobsite

Terms and Conditions

Net 30 days, subject to review and approval by our Credit Dept. Payment obligations are not dependent or contingent upon the manner in which purchaser may receive payment from others. No retainage against this order will be permitted unless agreed to ahead of time. Warranty is invalid without factory start up.
Start up will be done during normal business hours. Additional charges will be applied to start ups requested on weekends or off normal business hours.

Generac Power Systems, Inc.
S45 W29290 Hwy. 59
Waukesha, Wisconsin 53189

P (262) 544-4811
F (262) 968-3791

Generac Pre-Startup Checklist

This generator Pre-Startup Checklist must be completed e-mailed to gsat@generac.com within 2 weeks of the requested schedule date. Generac will then have the local service dealer coordinate the startup date/time with the contact listed below within 3 business days.

Generac Contact

Michael.Ramps@generac.com
Inside Sales Representative
Generac Power Systems
262-544-4811 Ext. 4528

Objective of Form

This form was designed as a process improvement to aid the installing contractor in being prepared for the generator system start-up. The contractor is responsible to ensure that all installation work is completed prior to scheduling a technician to perform the system start-up, on-site testing, and basic operator instruction. **In the event that the start-up cannot be completed or requires additional work on the scheduled date due to inadequate site readiness, all costs associated with any return visits to complete such work will be charged to the contractor.**

Site Information

Site Name and # _____

Site Contact _____ **Generator Serial #** _____

Site Address _____

City, ST Zip _____ **Transfer Switch Serial # (s)** _____

Mobile Phone # _____ _____

Generac Power Systems, Inc.
S45 W29290 Hwy. 59
Waukesha, Wisconsin 53189

P (262) 544-4811
F (262) 968-3791

GENERAC

Initial applicable boxes

YES	NO	N/A	GENERAL
			Is the unit secured to the pad and grounded as required by NEC Article 250?
			Is there a minimum of 3 feet of clearance on all sides of the unit to allow for ease of maintenance and proper ventilation?
			Is the starting battery located in the battery tray (battery supplied with the generator set)?
			Are there any visible oil or coolant leaks?
			Is there any visible damage to the products?
			Is the Utility Power available? A start-up cannot be performed without the Utility Power present and will be reclassified as a prime power unit for warranty purposes.
			Will a transfer test be allowed at time of the initial start up? Start up cannot be completed without a transfer test. NOTE: In order to properly test generator, all facility load possible must be available.

YES	NO	N/A	ELECTRICAL
			Load conductors between generator output breakers and transfer switch (es) are installed and terminated?
			Have the remote annunciator and remote start leads been run? Are they sufficient size for the distance they must travel? Remote annunciator wires must be in a shielded cable.
			Are the generator load conductors, remote start leads, remote annunciator, A.C. leads to the battery charger and block heater run in separate conduits? The A.C. and D.C. leads must be separated.
			Is normal power available and connected at the automatic transfer switch (es)?
			Is the building load connected to automatic transfer switch (es)?
			Is 120vac, 15amp power supply is provided for the coolant heaters and battery charger?
			Has the GFI plug been wired? This supplies power to the pre-mounted battery chargers. NOTE: Do not connect batteries until the tech has approved as the battery will discharge if connected prior to approval.
			Are the transfer switch A.C. conductors terminated correctly? NOTE: The utility power source must be connected to N1, N2 & N3; emergency power source - E1, E2 & E3 and the load center - L1, L2 & L3.

Generac Power Systems, Inc.
S45 W29290 Hwy. 59
Waukesha, Wisconsin 53189

P (262) 544-4811
F (262) 968-3791

Initial applicable boxes

YES	NO	N/A	FUEL SYSTEMS
			Diesel Units - Has fuel been delivered and put into the sub-base or day tank?
			Gaseous Units - Natural gas and/or LPG fuel supply is connected and turned on?
			Gaseous Units - Fuel piping is the appropriate size based on full-load CFH demand (see specification sheet).
			Gaseous Units - Primary regulator(s) and flexible fuel line(s) are installed?
			Gaseous Units - Manual shut-off valve and any applicable safety valves are installed per local codes and standards (supplied and installed by contractor)?
			Gaseous Units - Fuel pressure is available and adequate at the generator set service regulator (see specification sheet)?
			Gaseous Units - Service regulator is adjusted correctly and sized to meet CFH of Generator Set?

YES	NO	N/A	INDOOR INSTALL
			Has the exhaust flex connector been properly sized to prevent high engine backpressure?
			Is the exhaust pipe installed with a downward slope to prevent water or condensation from entering the exhaust manifold or head?
			If the exhaust pipe is installed with hinges or mounts, are they tight and of correct size and grade through a wall or partition?
			Is an NFPA approved wall thimble installed around the exhaust pipe at any point it passes through a wall or partition (supplied and installed by contractor)?
			Is the exhaust system outlet located in place where it would prevent entry of exhaust gas or fumes into nearby buildings or structures?
			Has proper inlet & outlet air vents been installed. NOTE: Radiators must be ducted to outside of room.

NOTES AND COMMENTS

Signature of Contractor _____ **Date** _____

Signature of Dealer _____ **Date** _____

NOTES:
1. CONTROL PANEL, (OPTIONAL BATTERY CHARGER INSIDE).
2. 120V, 20A, GFCI & 250V, 15A OUTLET (OPTIONAL).
3. CONNECTION POINTS FOR CONTROL WIRES PROVIDED IN THE LOW VOLTAGE CONNECTION BOX (USE LOW VOLTAGE STUB-UP AREA).
4. BATTERY (12 VOLT NEGATIVE GROUND SYSTEM).
5. MAIN LINE CIRCUIT BREAKER (MLCB), AC LOAD LEADS.
6. CENTER OF GRAVITY AND WEIGHT MAY CHANGE DUE TO UNIT OPTIONS.

7. ENGINE SERVICE CONNECTIONS:
   INLET NATURAL GAS & LP VAPOR: 1-1/4" FEMALE NPT COUPLING
   INLET LP LIQUID: 1/4" NPT
   OIL DRAIN: 1/2" FEMALE NPT COUPLING
   FLEX PIPE OUTLET: 2.5" I.D.
   EXHAUST OUTLET: 2.5" O.D.
   ***** SEE GENERATOR SIZING GUIDE FOR FUEL PIPE SIZING TO SUIT APPLICATION *****

8. AUXILARY AC CONNECTION FOR UNIT OPTIONS ARE LOCATED IN HIGH VOLTAGE CONNECTION BOX. UNLESS AN OPTIONAL LOAD CENTER IS INSTALLED.
9. OXYGEN SENSOR (EQUIPPED) MUST BE MOUNTED BETWEEN ENGINE OUTLET AND CATALYST INLET AS SHOWN. IF ELBOW IS REQUIRED ONLY SINGLE ELBOW MY BE USED.
10. EXHAUST PIPES MAY BE ROTATED TO ALLOW MUFFLER TO POINT OUT TO THE RIGHT OR LEFT SIDE OF GENERATOR.
11. CATALYST MUST BE MOUNTED IN DESCRIBED POSITION. FAILING TO FOLLOW THESE INSTRUCTIONS WHEN INSTALLING A CERTIFIED ENGINE IN A PIECE OF STATIONARY EQUIPMENT VIOLATES FEDERAL LAW 40CFR 1068.105(b), SUBJECT TO FINES OR PENALTIES AS DESCRIBED IN THE CLEAN AIR ACT.
12. GENERATOR SET MUST BE INSTALLED SUCH THAT FRESH COOLING AIR IS AVAILABLE AND DISCHARGE AIR FROM THE RADIATOR IS NOT RECIRCULATED.
13. BOTTOM OF GENERATOR SET MUST BE ENCLOSED TO PREVENT PEST INTRUSTION AND RECIRCULATION OF DISCHARGE AIR AND/OR IMPROPER COOLING AIR FLOW.
14. EXHAUST SYSTEM MAXIMUM BACK PRESSURE: 37 INCHES H20.
15. INSTALL EXHAUST BLANKETS ALONG THIS LINE, BLANKETS SHOULD NOT COVER OXYGEN SENSOR.
16. MOUNTING BOLTS OR STUDS TO CONCRETE SHALL BE 5/8-11 GRADE 5. (USE STANDARD SAE TORQUE SPECS)

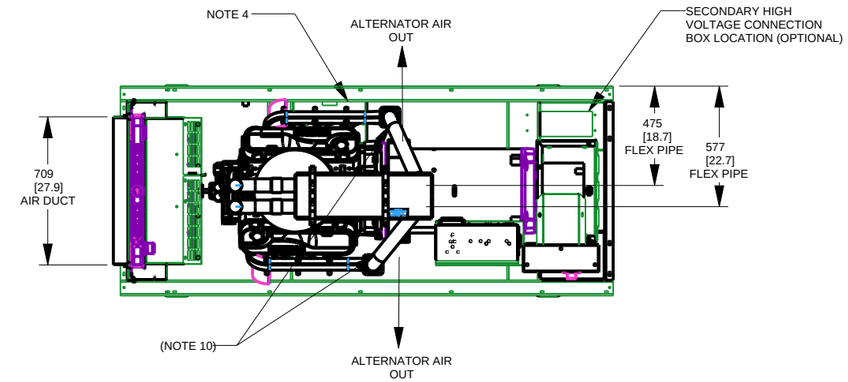

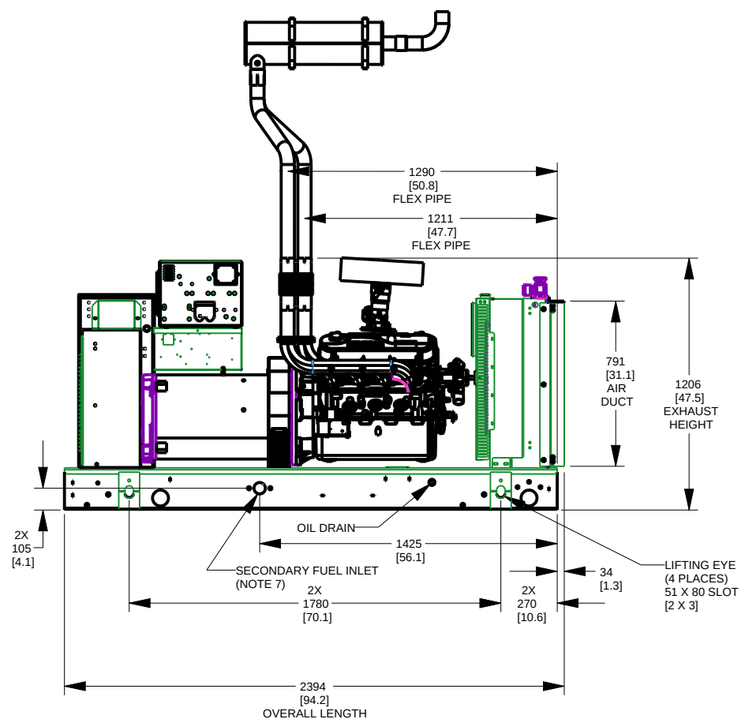

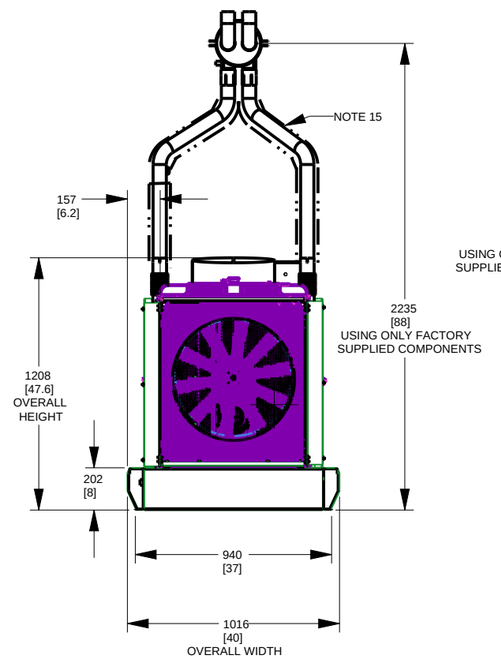

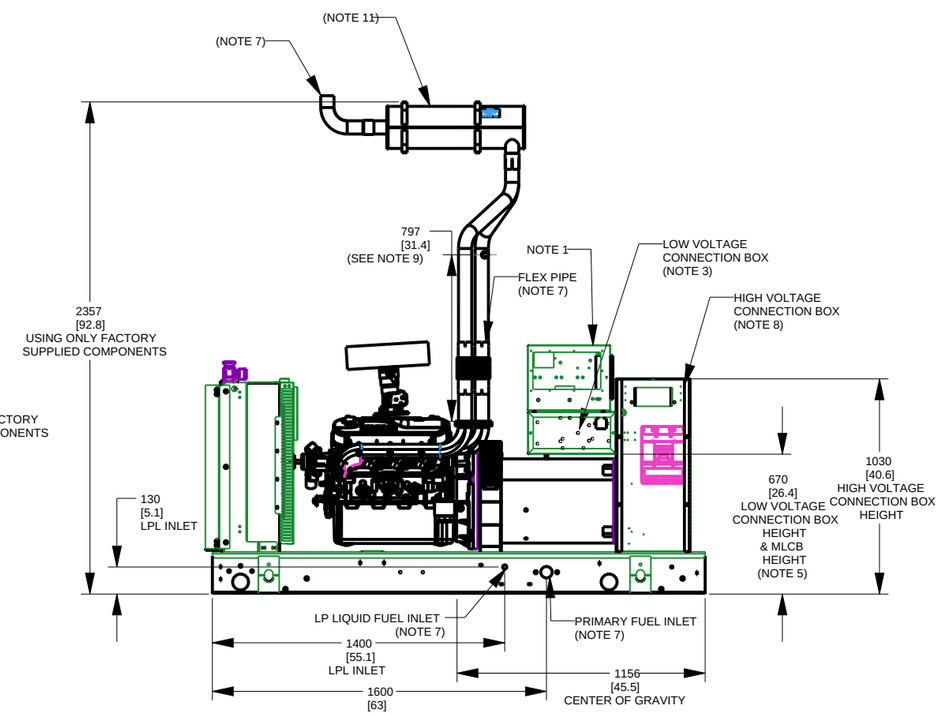

WEIGHT DATA:
GENERATOR AS SHOWN: 936.2 KG [2064 LBS]
SHIPPING SKID HEIGHT: 170 MM [6.7"]

DRAWING CREATED FROM PRO/ENGINEER 3D FILE. ECO MODIFICATION TO BE APPLIED TO SOLID MODEL ONLY.

INSTALLATION DRAWING

GENERAC POWER SYSTEMS OWNS THE COPYRIGHT OF THIS DRAWING WHICH IS SUPPLIED IN CONFIDENCE AND MUST NOT BE USED FOR ANY PURPOSE OTHER THAN FOR WHICH IT IS SUPPLIED WITHOUT THE EXPRESS WRITTEN CONSENT OF GENERAC POWER SYSTEMS.
©GENERAC POWER SYSTEMS 2012

ELECTRONICALLY APPROVED
INSIDE WINDCHILL

GENERAC

TITLE
INSTALL OPENSET G9.0L 100KW

ISSUE DATE:

SIZE	CAGE NO	DWG NO	REV
B		0K0383	E
SCALE 0.035	WT-KG	SHEET 1 of 2	

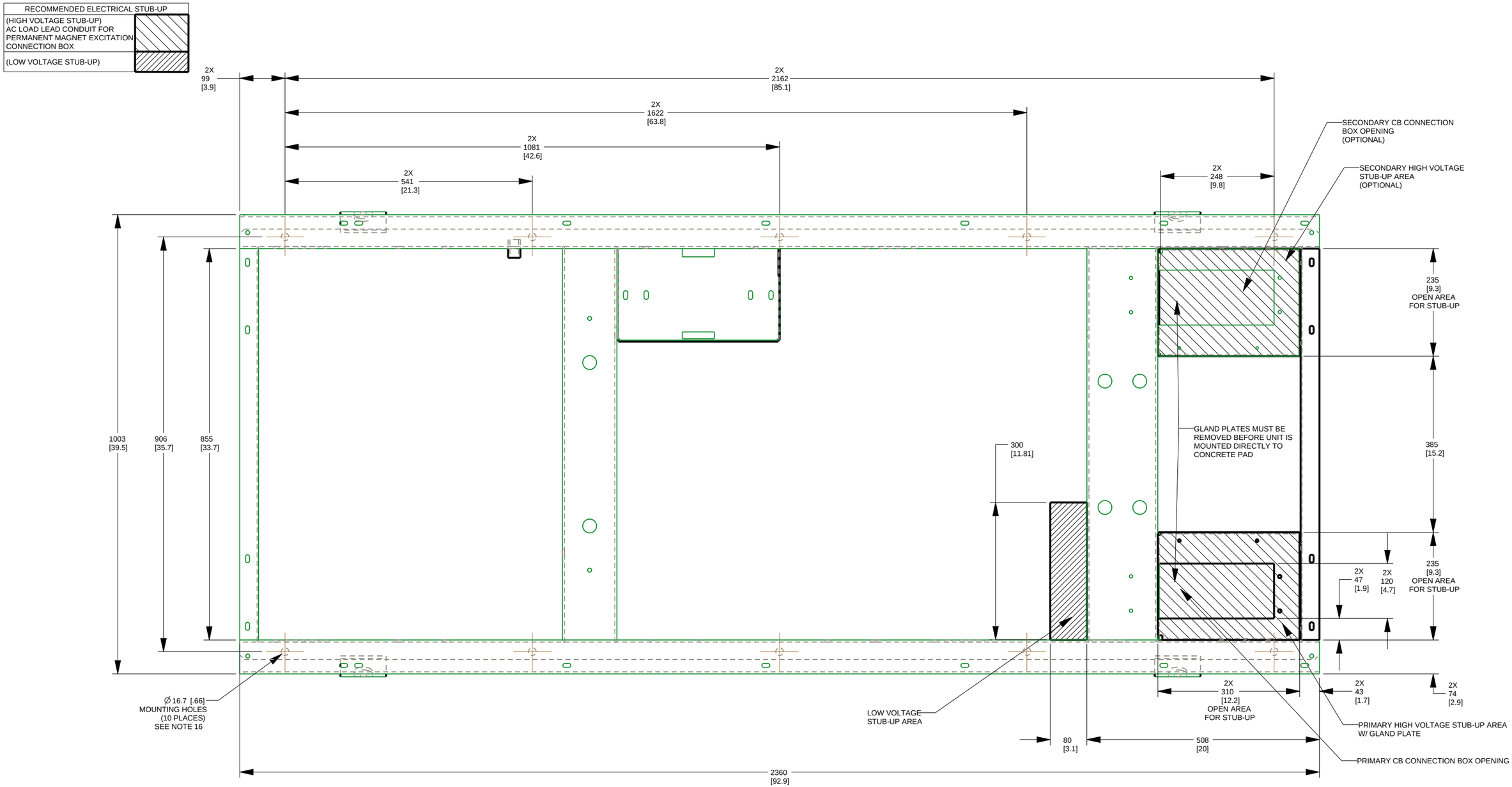

DRAWING CREATED FROM PRO/ENGINEER 3D FILE. ECO MODIFICATION TO BE APPLIED TO SOLID MODEL ONLY.

INSTALLATION DRAWING

GENERAC POWER SYSTEMS OWNS THE COPYRIGHT OF THIS DRAWING WHICH IS SUPPLIED IN CONFIDENCE AND MUST NOT BE USED FOR ANY PURPOSE OTHER THAN FOR WHICH IT IS SUPPLIED WITHOUT THE EXPRESS WRITTEN CONSENT OF GENERAC POWER SYSTEMS.
©GENERAC POWER SYSTEMS 2012

ELECTRONICALLY APPROVED
INSIDE WINDCHILL

GENERAC

TITLE

INSTALL STUB-UP VIEW G9.0L 100KW

ISSUE DATE:

SIZE	CAGE NO	DWG NO	REV
B		0K0383	E
SCALE 0.120	WT-KG		SHEET 2 of 2

GENERAC® | INDUSTRIAL POWER

SG100 100 kW

SG100

9.0L

Industrial Spark-Ignited Generator Set

EPA Certified Stationary Emergency

Standby Power Rating

100 kW 125 kVA 60 Hz

Prime Power Rating*

90 kW 113 kVA 60 Hz

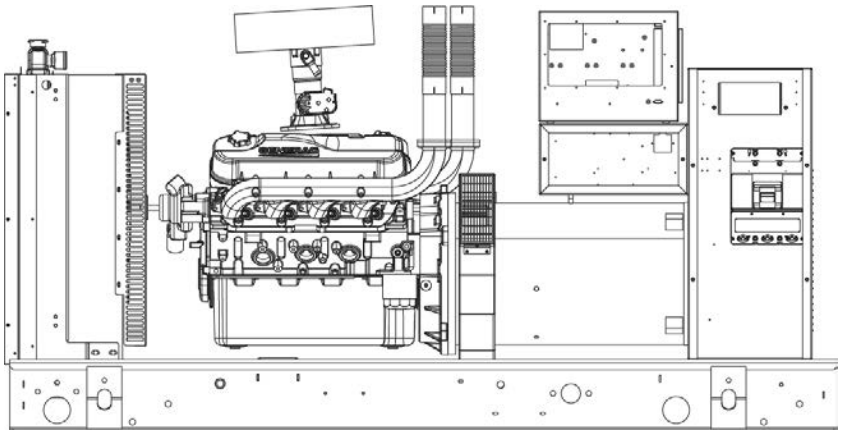

*EPA Certified Prime ratings are not available in the U.S. or its Territories

Image used for illustration purposes only

Codes and Standards

Generac products are designed to the following standards:

UL2200, UL508, UL142, UL498

NFPA70, 99, 110, 37

NEC700, 701, 702, 708

ISO9001, 8528, 3046, 7637, Pluses #2b, 4

NEMA ICS10, MG1, 250, ICS6, AB1

ANSI C62.41

IBC 2009, CBC 2010, IBC 2012, ASCE 7-05, ASCE 7-10, ICC-ES AC-156 (2012)

Powering Ahead

For over 50 years, Generac has led the industry with innovative design and superior manufacturing.

Generac ensures superior quality by designing and manufacturing most of its generator components, including alternators, enclosures and base tanks, control systems and communications software.

Generac's gensets utilize a wide variety of options, configurations and arrangements, allowing us to meet the standby power needs of practically every application.

Generac searched globally to ensure the most reliable engines power our generators. We choose only engines that have already been proven in heavy-duty industrial application under adverse conditions.

Generac is committed to ensuring our customers' service support continues after their generator purchase.

GENERAC | INDUSTRIAL POWER

SG100

Standard Features

ENGINE SYSTEM

General

- Oil Drain Extension
- Air Cleaner
- Fan Guard
- Stainless Steel flexible exhaust connection
- Critical Exhaust Silencer
- Factory Filled Oil
- Radiator duct adapter (open set only)

Fuel System

- Primary and Secondary Fuel Shutoff
- Flexible Fuel Line - NPT Connection

Cooling System

- Closed Coolant Recovery System
- UV/Ozone resistant hoses
- Factory-installed Radiator
- Radiator drain extension
- 50/50 Ethylene glycol antifreeze

Engine Electrical System

- Battery charging alternator
- Battery Cables
- Battery Tray
- Solenoid activated starter motor
- Rubber-booted engine electrical connections

ALTERNATOR SYSTEM

- UL2200 GENprotect™
- Class H insulation material
- 2/3 Pitch
- Skewed Stator
- Brushless Excitation
- Sealed Bearings
- Amortisseur winding
- Full load capacity alternator

GENERATOR SET

- Internal Genset Vibration Isolation
- Separation of circuits - high/low voltage
- Separation of circuits - multiple breakers
- Wrapped Exhaust Piping
- Standard Factory Testing
- 2 Year Limited Warranty (Standby rated Units)
- 1 Year Warranty (Prime rated units)
- Silencer mounted in the discharge hood (enclosed only)

ENCLOSURE (if selected)

- Rust-proof fasteners with nylon washers to protect finish
- High performance sound-absorbing material
- Gasketed doors
- Stamped air-intake louvers
- Air discharge hoods for radiator-upward pointing
- Stainless steel lift off door hinges
- Stainless steel lockable handles
- Rhino Coat™ - Textured polyester powder coat

CONTROL SYSTEM

Control Panel

- Digital H Control Panel - Dual 4x20 Display
- Programmable Crank Limiter
- 7-Day Programmable Exerciser
- Special Applications Programmable PLC
- RS-232/485
- All-Phase Sensing DVR
- Full System Status
- Utility Monitoring
- Low Fuel Pressure Indication
- 2-Wire Start Compatible
- Power Output (kW)
- Power Factor
- kW Hours, Total & Last Run
- Real/Reactive/Apparent Power
- All Phase AC Voltage
- All Phase Currents
- Oil Pressure
- Coolant Temperature
- Coolant Level
- Engine Speed
- Battery Voltage
- Frequency
- Date/Time Fault History (Event Log)
- Isochronous Governor Control
- Waterproof/sealed Connectors
- Audible Alarms and Shutdowns
- Not in Auto (Flashing Light)
- Auto/Off/Manual Switch
- E-Stop (Red Mushroom-Type)
- NFPA110 Level I and II (Programmable)
- Customizable Alarms, Warnings, and Events
- Modbus protocol
- Predictive Maintenance algorithm
- Sealed Boards
- Password parameter adjustment protection
- Single point ground
- 15 channel data logging
- 0.2 msec high speed data logging
- Alarm information automatically comes up on the display

Alarms

- Oil Pressure (Pre-programmable Low Pressure Shutdown)
- Coolant Temperature (Pre-programmed High Temp Shutdown)
- Coolant Level (Pre-programmed Low Level Shutdown)
- Low Fuel Pressure Alarm
- Engine Speed (Pre-programmed Over speed Shutdown)
- Battery Voltage Warning
- Alarms & warnings time and date stamped
- Alarms & warnings for transient and steady state conditions
- Snap shots of key operation parameters during alarms & warnings
- Alarms and warnings spelled out (no alarm codes)

SG100

Configurable Options

ENGINE SYSTEM

General

- ○ Engine Block Heater
- ○ Oil Heater
- ○ Air Filter Restriction Indicator
- ○ Stone Guard (Open Set Only)

Engine Electrical System

- ○ 10A UL battery charger
- ○ 2.5A UL battery charger
- ○ Battery Warmer

GENERATOR SET

- ○ Gen-Link Communications Software (English Only)
- ○ Extended Factory Testing (3 Phase Only)
- ○ IBC Seismic Certification
- ○ 8 Position Load Center
- ○ 2 Year Extended Warranty
- ○ 5 Year Warranty
- ○ 5 Year Extended Warranty

ENCLOSURE

- ○ Standard Enclosure
- ○ Level 1 Sound Attenuation
- ○ Level 2 Sound Attenuation
- ○ Steel Enclosure
- ○ Aluminum Enclosure
- ○ 150 MPH Wind Kit
- ○ 12 VDC Enclosure Lighting Kit
- ○ 120 VAC Enclosure Lighting Kit
- ○ AC/DC Enclosure Lighting Kit
- ○ Door Alarm Switch

ALTERNATOR SYSTEM

- ○ Alternator Upsizing
- ○ Anti-Condensation Heater
- ○ Tropical coating
- ○ Permanent Magnet Excitation

CIRCUIT BREAKER OPTIONS

- ○ Main Line Circuit Breaker
- ○ 2nd Main Line Circuit Breaker
- ○ Shunt Trip and Auxiliary Contact
- ○ Electronic Trip Breakers

CONTROL SYSTEM

- ○ 21-Light Remote Annunciator
- ○ Remote Relay Panel (8 or 16)
- ○ Oil Temperature Sender with Indication Alarm
- ○ Remote E-Stop (Break Glass-Type, Surface Mount)
- ○ Remote E-Stop (Red Mushroom-Type, Surface Mount)
- ○ Remote E-Stop (Red Mushroom-Type, Flush Mount)
- ○ Remote Communication - Modem
- ○ Remote Communication - Ethernet
- ○ 10A Run Relay
- ○ Ground fault indication and protection functions

Engineered Options

ENGINE SYSTEM

- ○ Coolant heater ball valves
- ○ Fluid containment pans

ALTERNATOR SYSTEM

- ○ 3rd Breaker Systems

GENERATOR SET

- ○ Special Testing
- ○ Battery Box

ENCLOSURE

- ○ Motorized Dampers
- ○ Enclosure Ambient Heaters

CONTROL SYSTEM

- ○ Spare inputs (x4) / outputs (x4) - H Panel Only
- ○ Battery Disconnect Switch

Rating Definitions

Standby – Applicable for a varying emergency load for the duration of a utility power outage with no overload capability.
Prime – Applicable for supplying power to a varying load in lieu of utility for an unlimited amount of running time. A 10% overload capacity is available for 1 out of every 12 hours. The Prime Power option is only available on International applications.

Power ratings in accordance with ISO 8528-1, Second Edition dated 2005-06-01, definitions for Prime Power (PRP) and Emergency Standby Power (ESP).

GENERAC | INDUSTRIAL POWER

SG100 application and engineering data

ENGINE SPECIFICATIONS

General

Make	Generac
Cylinder #	8
Type	V
Displacement - L (Cu In)	8.9L (540)
Bore - mm (in)	114.31 (4.5)
Stroke - mm (in)	107.15 (4.25)
Compression Ratio	10.5:1
Intake Air Method	Naturally Aspirated
Number of Main Bearings	5
Connecting Rods	Forged
Cylinder Head	Cast Iron
Cylinder Liners	No
Ignition	High Energy
Pistons	Aluminum Alloy
Crankshaft	Steel
Lifter Type	Hydraulic Roller
Intake Valve Material	Steel Alloy
Exhaust Valve Material	Stainless Steel
Hardened Valve Seats	Yes

Engine Governing

Governor	Electronic
Frequency Regulation (Steady State)	+/- 0.25%

Lubrication System

Oil Pump Type	Gear
Oil Filter Type	Full-flow spin-on cartridge
Crankcase Capacity - L (qts)	8.5 (8.0)

Cooling System

Cooling System Type	Pressurized Closed
Water Pump Flow - gpm (lpm)	26 (98)
Fan Type	Pusher
Fan Speed (rpm)	2330
Fan Diameter mm (in)	558 (22)
Coolant Heater Wattage	1500
Coolant Heater Standard Voltage	120 V

Fuel System

Fuel Type	Natural Gas, Propane Vapor
Carburetor	Down Draft
Secondary Fuel Regulator	Standard
Fuel Shut Off Solenoid	Standard
Operating Fuel Pressure	11" - 14" H2O

Engine Electrical System

System Voltage	12 VDC
Battery Charging Alternator	Standard
Battery Size	See Battery Index 0161970SBY
Battery Voltage	12 VDC
Ground Polarity	Negative

ALTERNATOR SPECIFICATIONS

Standard Model	390 mm
Poles	4
Field Type	Revolving
Insulation Class - Rotor	H
Insulation Class - Stator	H
Total Harmonic Distortion	<5%
Telephone Interference Factor (TIF)	< 50
Standard Excitation	Brushless
Bearings	Sealed Ball
Coupling	Direct Drive
Prototype Short Circuit Test	Yes

Voltage Regulator Type	Full Digital
Number of Sensed Phases	All
Regulation Accuracy (Steady State)	+/- 0.25%

SG100 operating data

POWER RATINGS

	Natural Gas		Propane Vapor	
Single-Phase 120/240 VAC @1.0pf	100 kW	Amps: 417	100 kW	Amps: 417
Three-Phase 120/208 VAC @0.8pf	100 kW	Amps: 347	100 kW	Amps: 347
Three-Phase 120/240 VAC @0.8pf	100 kW	Amps: 301	100 kW	Amps: 301
Three-Phase 277/480 VAC @0.8pf	100 kW	Amps: 150	100 kW	Amps: 150
Three-Phase 346/600 VAC @0.8pf	100 kW	Amps: 120	100 kW	Amps: 120

STARTING CAPABILITIES (sKVA)

sKVA vs. Voltage Dip

		480VAC						208/240VAC					
Alternator	kW	10%	15%	20%	25%	30%	35%	10%	15%	20%	25%	30%	35%
Standard	100	79	118	157	197	236	275	59	89	118	148	177	206
Upsize 1	130	116	174	232	290	348	406	87	131	174	218	261	305

FUEL CONSUMPTION RATES*

Natural Gas – ft³/hr (m³/hr)	
Percent Load	Standby
25%	391 (11.1)
50%	669 (19.0)
75%	904 (25.6)
100%	1116 (31.6)

Propane Vapor – ft³/hr (m³/hr)	
Percent Load	Standby
25%	157.4 (4.5)
50%	269.9 (7.6)
75%	364.4 (10.3)
100%	449.8 (12.7)

*Fuel supply installation must accommodate fuel consumption rates at 100% load.

COOLING

		Standby
Air Flow (inlet air combustion and radiator)	ft³/min (m³/min)	5797 (164.2)
Coolant Flow per Minute	gpm (lpm)	26 (98)
Coolant System Capacity	gal (L)	6.0 (22.7)
Heat Rejection to Coolant	BTU/hr	390,000
Max. Operating Air Temp on Radiator	ºF (ºC)	122 (50)
Maximum Radiator Backpressure	in H_2O	0.5

COMBUSTION AIR REQUIREMENTS

		Standby
Flow at Rated Power	cfm (m3/min)	282 (7.9)

ENGINE

		Standby
Rated Engine Speed	rpm	1800
Horsepower at Rated kW**	hp	149
Piston Speed	ft/min (m/min)	1275 (389)
BMEP	psi	125

** Refer to "Emissions Data Sheet" for maximum bHP for EPA and SCAQMD permitting purposes.

EXHAUST

		Standby
Exhaust Flow (Rated Output)	cfm (m³/min)	866 (24.5)
Maximum Recommended Back Pressure	inHg	1.5
Exhaust Temp (Rated Output)	ºF (ºC)	1230 (666)
Exhaust Outlet Size (Open Set)	in	2.5" I.D Flex x 2 (No Muffler)

Deration – Operational characteristics consider maximum ambient conditions. Derate factors may apply under atypical site conditions. Please consult a Generac Power Systems Industrial Dealer for additional details. All performance ratings in accordance with ISO3046, BS5514, ISO8528 and DIN6271 standards.

GENERAC | INDUSTRIAL POWER

SG100 dimensions, weights, and sound levels

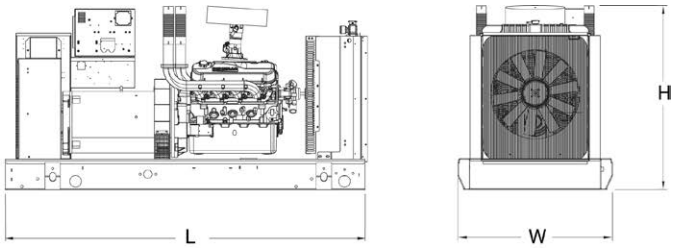

OPEN SET (Includes Exhaust Flex)

L x W x H in (mm)	94.2 (2394) x 40 (1016) x 47.5 (1206)
Weight lbs (kg)	2064 (936.2)
Sound Level (dBA*)	83.8

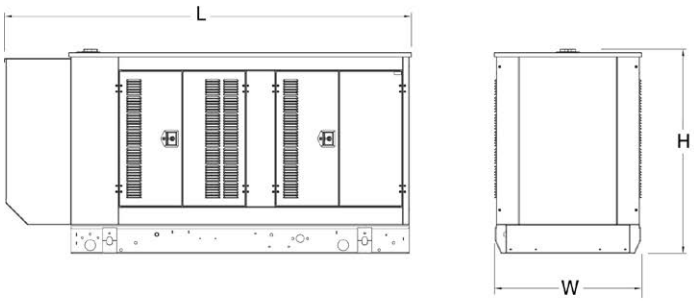

STANDARD ENCLOSURE

L x W x H in (mm)	111.79 (2839.5) x 40.46 (1027.8) x 56.18 (1427)
Weight lbs (kg)	Steel: 2708 (1228) Aluminum: 2413 (1094)
Sound Level (dBA*)	79.7

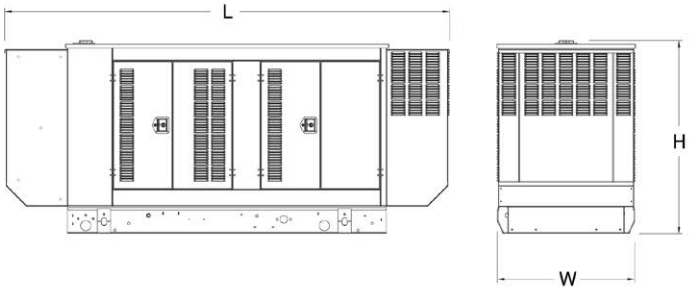

LEVEL 1 ACOUSTIC ENCLOSURE

L x W x H in (mm)	129.42 (3287.2) x 40.46 (1027.8) x 56.18 (1427)
Weight lbs (kg)	Steel: 2798 (1269.2) Aluminum: 2355 (1068)
Sound Level (dBA*)	75.3

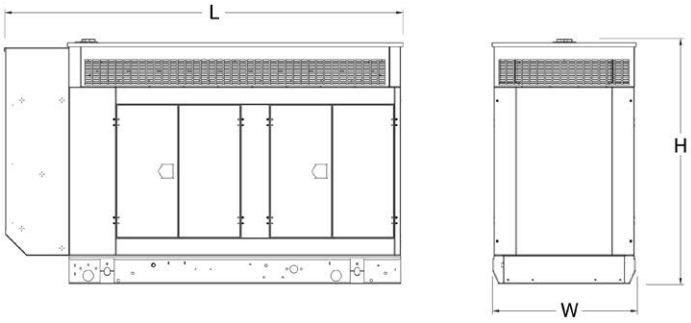

LEVEL 2 ACOUSTIC ENCLOSURE

L x W x H in (mm)	111.81 (2840) x 40.46 (1027.8) x 68.61 (1742.8)
Weight lbs (kg)	Steel: 3022 (1370.8) Aluminum: 2431 (1103)
Sound Level (dBA*)	70.8

*All measurements are approximate and for estimation purposes only. Sound levels measured at 23 ft (7 m) and does not account for ambient site conditions.

YOUR FACTORY RECOGNIZED GENERAC INDUSTRIAL DEALER

Specification characteristics may change without notice. Please consult a Generac Power Systems Industrial Dealer for detailed installation drawings.

Generac Power Systems, Inc. • S45 W29290 HWY. 59, Waukesha, WI 53189 • generac.com

©2013 Generac Power Systems, Inc. All rights reserved. All specifications are subject to change without notice. Part No. 0K4291-B / Printed in U.S.A. 10/23/13

EQUIPMENT LIMITED WARRANTY

APPLIES IN U.S.A. AND CANADA ONLY

FAILURE TO MAINTAIN YOUR EQUIPMENT WILL VOID THIS WARRANTY.

COVERED EQUIPMENT

The following heating and cooling equipment is covered by the Limited Warranty:

Oil Furnaces: LG14

Unit/Duct Heaters: LD24 (all units), LF24 and TUA (100,000 to 400,000 btuh units).

Air Handlers: ACBX32, TAA.

Condensing Units: 4SCU13LC, TSA.

Heat Pumps: 4SHP13LC, TPA.

Packaged Equipment: KCA, KGA, KHA, TCA, TGA, THA.

Electric Heat Sections: AECB29, ECH16, ECH24, T3Eh.

ONE (1) YEAR COVERAGE -- ALL APPLICATIONS

The covered equipment and covered components are warranted by the manufacturer for a period of one (1) year from the *date of the original unit installation*, when installed and operated in accordance with the manufacturer's recommendations. If, during this period, a covered component fails because of a manufacturing defect, the manufacturer will provide a free replacement part to the owner. The owner must pay shipping charges and all other costs of warranty service.

EXTENDED COVERAGE

This limited warranty provides extended coverage on the components outlined below. The extended warranty coverage begins with the *date of the original unit installation* and represents the total warranty period for the specific component.

Heat Exchangers:

KGA and TGA, (Aluminized -- All applications) -- Ten (10) years
KGA and TGA (Stainless -- All applications) -- Fifteen (15) years.
LF24 and TUA (Aluminized -- All applications) -- Ten (10) years.
LF24 and TUA (Stainless -- All applications) -- Fifteen (15) years.
LD24 (Aluminized -- All applications) -- Two (2) years.
LD24 (Stainless -- All applications) -- Five (5) years.
LG14 (All applications) -- Five (5) years.

Burners: LG14 -- Three (3) years.

Compressors: 4SCU13LC, 4SHP13LC -- Five (5) years.
TSA, TPA -- Five (5) years.
KCA, KGA, KHA, TCA, TGA, THA -- Five (5) years.

NOTE - If the date of original installation cannot be verified, the warranty period will be deemed to begin six (6) months after the date of manufacture.

COMPONENT AVAILABILITY

In the event that a component covered by this warranty is no longer available, the manufacturer will, at its option, provide a free suitable substitute component or allow the owner to purchase an equivalent new unit at a reduced price of 20 percent of the list price in effect on the date of the failure. The owner must pay shipping charges and all other costs of warranty service.

EXCLUDED COMPONENTS

The following components are not protected by this warranty: cabinets, cabinet pieces, air filters, driers, refrigerant, belts, wiring, fuses and unit accessories.

REPAIRS

All repairs of covered components must be made with authorized service parts by a licensed professional service contractor (or equivalent).

CARE OF EQUIPMENT

This new unit must be properly installed, operated and maintained by a licensed professional installer (or equivalent) or service agency in accordance with the unit installation, operation and maintenance instructions provided with each unit. Failure to provide maintenance per the manufacturer's instructions will void this warranty. The owner may be asked to provide written documentation of annual and other periodic preventive maintenance.

WARRANTY PROCEDURE

When warranty parts are required:

1 - Be prepared to furnish the following information:
   - a - Complete model and serial number.
   - b - Proof of required periodic maintenance, installation date and location if warranty claim.
   - c - An accurate description of the problem.

2 - Call your local installing contractor.

3 - If the installing contractor is unable to provide warranty parts, check the yellow pages for another contractor in your area. If you are unable to secure assistance from a contractor, contact the appropriate manufacturer listed below:

Lennox Industries Inc.	Allied Air Enterprises
P.O. Box 799900	215 Metropolitan Drive
Dallas, TX 75379-9900	West Columbia, SC 29170
1-800-9LENNOX	1-800-448-5872

WARRANTY LIMITATIONS

1 - The manufacturer will not pay labor involved in diagnostic calls, or in removing, repairing, servicing, or replacing parts. Such costs may be covered by a separate warranty provided by the installing contractor.

2 - This warranty is void if the covered equipment is removed from the original installation site.

3 - This warranty does not cover damage or defect resulting from:
   - a - Flood, wind, fire, lightning, mold, or installation and operation in a corrosive atmosphere, or otherwise in contact with corrosive materials (chlorine, fluorine, salt, recycled waste water, urine, fertilizers, or other damaging substances or chemicals).
   - b - Accident, neglect, or unreasonable use or operation of the equipment, including operation of electrical equipment at voltages other than the range specified on the unit nameplate (includes damages caused by brownouts), or reverse rotation of compressors or motors due to improper phasing.
   - c - Modification, change or alteration of the equipment, except as directed in writing by the manufacturer.
   - d - Operation with system components (indoor unit, outdoor unit and refrigerant control devices) which do not match or meet the specifications recommended by the manufacturer.
   - e - Operation of packaged gas/electric units (equipped with aluminized heat exchanger) with mixed air temperatures of less than 45°F (7°C).
   - f - Operation of furnaces with return air temperatures of less than 60°F (16°C) or operation of a furnace field-installed downstream from a cooling coil.
   - g - Use of contaminated or alternate refrigerant.

The installation of replacement parts under terms of this warranty will not extend the original warranty period.

The manufacturer makes no express warranties other than the warranty specified above. All implied warranties, including the implied warranty of merchantability and fitness for a particular purpose, are excluded to the extent legally permissible. Should such exclusion or limitation of the warranty be unenforceable, such implied warranties are in any event limited to to a period of one (1) year. Liability for incidental and consequential damages is excluded. Some states do not allow limitations on the duration of an implied warranty or the exclusion or limitation of incidental or consequential damages, so the limitations or exclusions may not apply to you.

The manufacturer will not pay electricity or fuel costs, or increases in electricity or fuel costs, for any reason whatsoever, including additional or unusual use of supplemental electric heat. This warranty does not cover lodging expenses.

The manufacturer shall not be liable for any default or delay in performance under this warranty caused by any contingency beyond its control.

This warranty gives you specific legal rights, and you may also have other rights which vary from state to state.

NOTE TO CUSTOMER

Please complete information below and retain this warranty for your records and future reference.

Unit Model Number:_____

Serial Number:_____ Date:_____

Installing Contractor:_____ Phone:_____

©2006

Litho U.S.A.

FORM W-024-L3 -- 6/1/2009
Supersedes 11/1/2008

Warranty Claim Form

Request for Credit Memo

Service Contractor Company Name	**Lennox ID #**	
E-mail Address	**Fax #**	
Address	**Phone #**	
City	**State/Province**	**Zip/Postal Code**

Step 1: Tell us about the equipment owner.

Application ☐ **Residential** ☐ **Non-residential**		**Company Name (Non-residential)**			
Owner's Last Name (Residential)		**Owner's First Name**		**M.I.**	
Address		**Phone #**			
City	**State/Province**	**Zip/Postal Code**			

Step 2: Tell us about the failed unit.

Serial Number of the Unit or Accessory		**Model Number of the Unit or Accessory**	
Date Unit or Accessory Installed			

Step 3: Tell us about the failed part. (Return of the failed part to your nearest Lennox warehouse may be required as outlined on the Lennox Return Parts List)

Failed Catalog/Part Number		**Date Failed**	
Compressor Serial Number			
Description of the failure			
Has this part failed and been replaced on this unit before this date? (Y/N)	**Yes** ☐ **Date Failed** _____ **No** ☐		

Step 4: Tell us the Lennox invoice # to credit for the purchased replacement part.

Lennox Invoice #:	

Step 5: Submit the Warranty Claim Form to the Lennox Warranty Department within 45 days from date of part failure.

Lennox Industries Warranty Department Contact Information

Email Address: indwarranty@lennoxind.com
Fax Number: 972-497-7884
Phone: 972-497-5474
Toll-Free: 1-800-453-6669 ext. 5474 (7:00 am to 5:30 pm CST)
Mailing Address: Lennox Industries Inc.,
Warranty Administration Dept.
PO Box 799900
Dallas, TX 75379-9900

A copy of the Warranty Claim will be e-mailed, faxed or mailed to you per the communication address provided within five (5) days. If the claim cannot be processed, you will receive a **Warranty Claim Notice** advising what is needed to process the claim. **Claims submitted <u>later than 45 days</u> after part failure will not be considered for credit.**

Lennox National Account
Parts Ordering Process

Non Warranty

Commercial Parts Customer Service

PHONE: 800-453-6669

FAX: 877-250-8561

Email: lennoxcustomerservice@lennoxind.com

Please call above phone number, fax or email the team to place all parts orders.

Parts can picked-up at the local distribution center, shipped to the jobsite or shipped to the contractor's office.

The caller will be asked to provide the following:

- Lennox Account Number
- Store Location Number & City
- PO if required
- Ship to Address
- Part number needed or the full model number with dash and catalog number (C/N)

Warranty

1. Call, fax or email your parts order using your Menards direct-buy, or contractor account number.
2. Enter the warranty claim online **www.lennoxdavenet.net** and get credit to the account

OR

1. Enter claim online **www.lennoxdavenet.net** using either Menards Direct Buy or contractor account number
2. Request replacement part be shipped rather than crediting account no payment necessary.

Warranty claims must be placed with 45 days of failure date of part

Return of some parts is required to get warranty claim credit. The claim ticket will tell you whether part will need to be returned or kept until credit is issued.

See Lennox Warranty Certificate for details on length and terms of warranty..

HTP

Advanced Heating
and Hot Water Systems

Elite FT

High Efficiency Fire Tube Heating Boiler

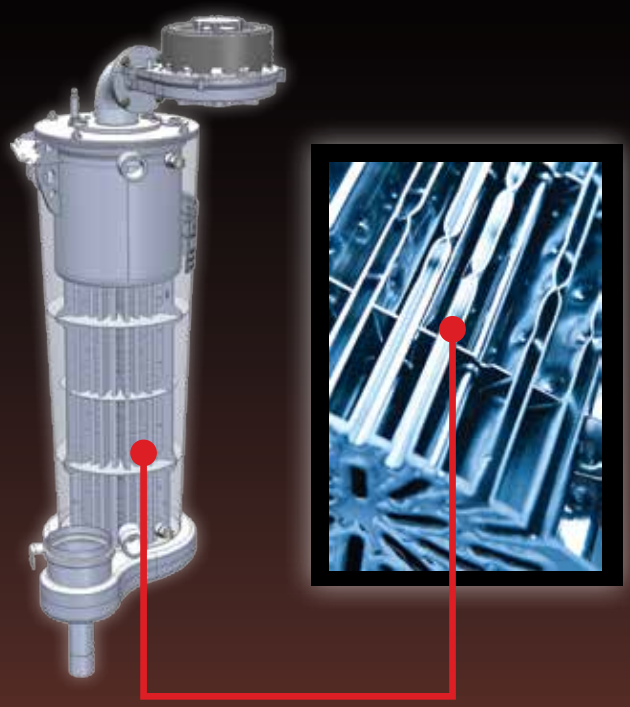

7 sizes:

55,000, 80,000,
110,000, 155,000,
199,000, 285,000
& 399,000 Btuh

up to 96% Efficient

5:1 Turndown Ratio

One of a kind design from the inside, out!

A Closer Look

EFT-155, EFT-199, EFT-285 & EFT-399 Models

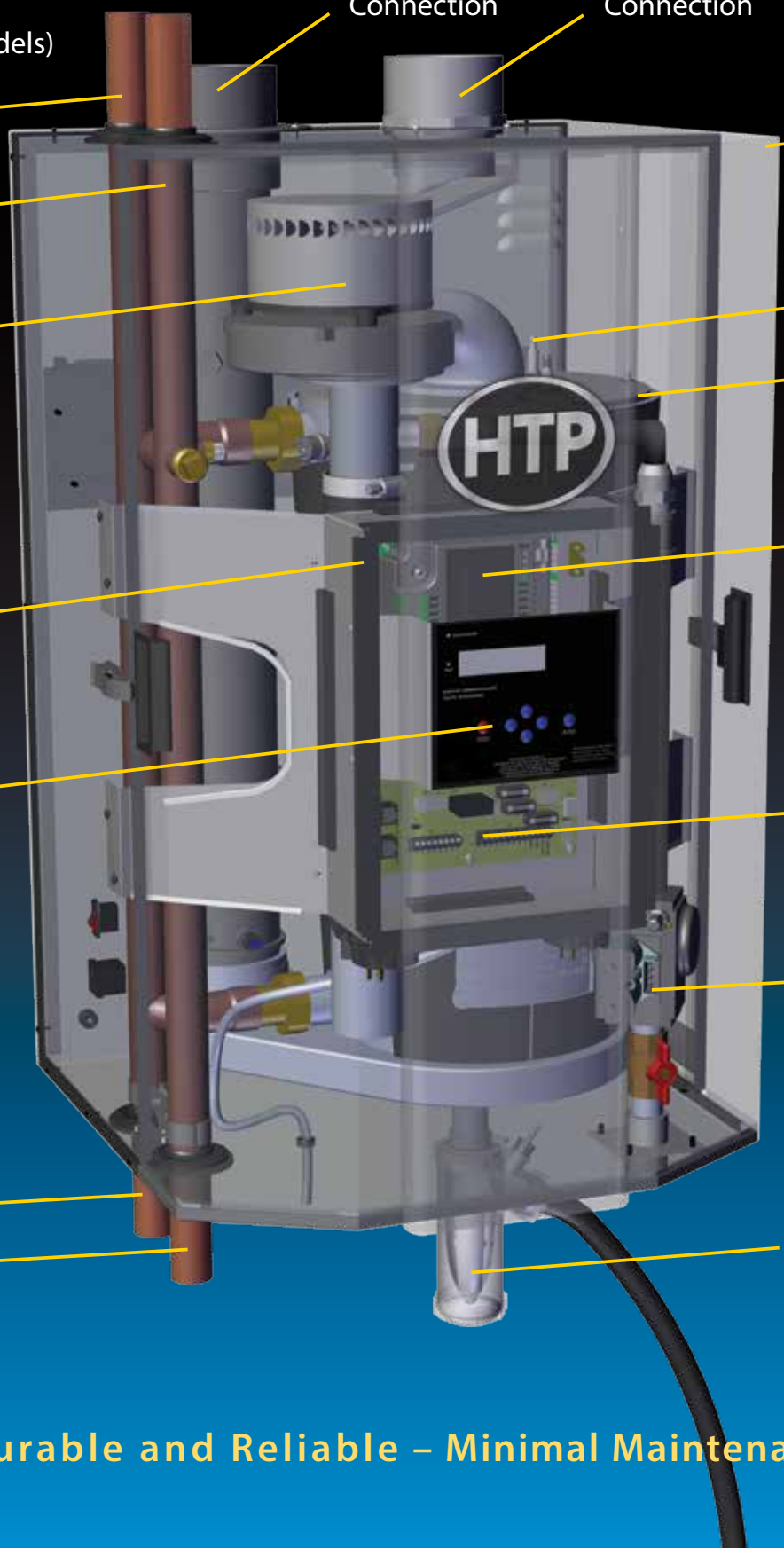

(Top connections not available for EFT-55, EFT-80 & EFT-110 models)

Exhaust Vent Connection

Intake Vent Connection

Alternate Top Return

Easily Removable Cover

Alternate Top Supply

Spark Ignition System with Flame Monitoring

Modulating Combustion Blower Assembly

Stainless Steel Fire Tube Heat Exchanger

Integrated Digital Control

Sealed Electronic Enclosure (Moisture & Corrosion Resistant)

2 Line 40 Character LCD Display - Program & Monitor Boiler Operation

Field Connection Board

TOTAL SYSTEM CONTROL

Negative Regulation Gas Valve

Alternate Bottom Return

Condensate System

Alternate Bottom Supply

Extremely Durable and Reliable – Minimal Maintenance Required

Elite FT

High Efficiency Fire Tube Heating Boiler

Look Inside the EFT-399

Energy Savings

Up to 96% AFUE operating efficiency

Reduces heating costs

Outdoor reset lowers operating set point automatically to increase system efficiency

Modulating burner input matches system load, conserving energy and increasing system efficiency

Low NOx emission - Reduces environmental impact

Combustion Turndown up to 5:1

Matches heating load automatically

Modulate combustion fan down to 20% of firing rate

Target temperature can be maintained as heating demand increases or decreases providing greater comfort by eliminating temperature swings in the heating system

Stainless Steel Fire Tube Heat Exchanger

Down fire design, promotes self cleaning of combustion system

Durable high grade stainless steel construction provides extended service life

Increased thermal mass provides low pressure drop and eliminates short cycling

Compatible with glycol based systems

Built-in condensate collection system

Residential and Commercial INSTALLATION

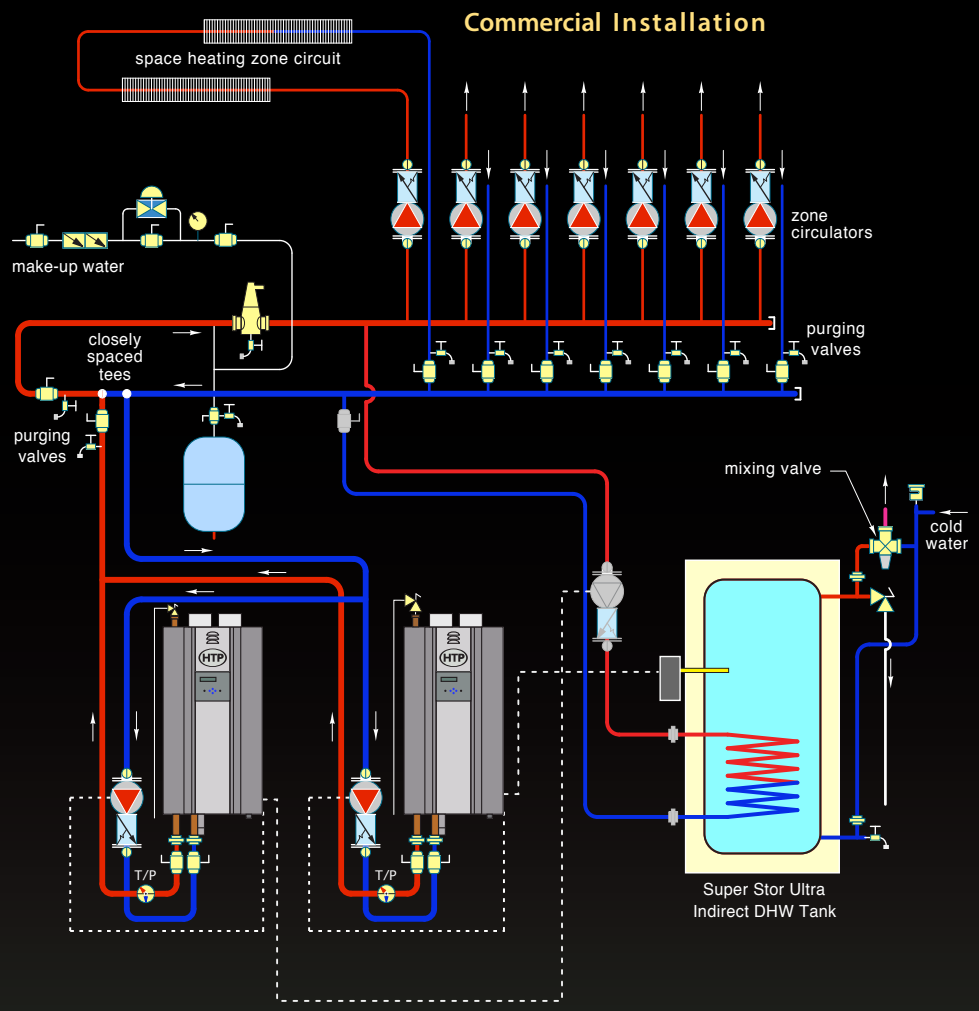

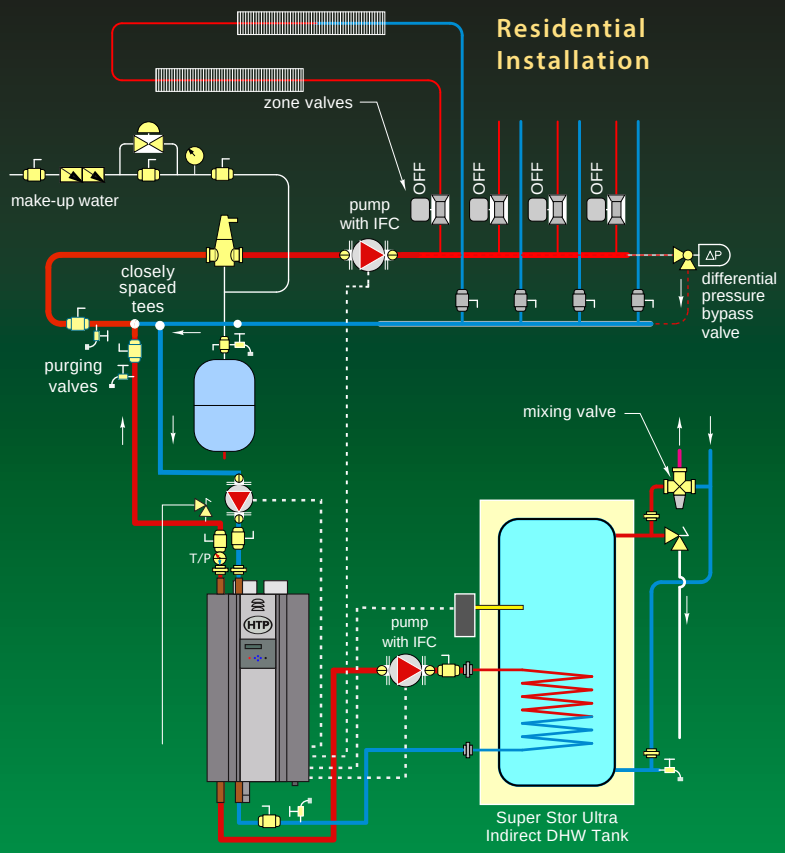

Versatility

7 models available: 55,000, to 399,000 Btuh

Top and Bottom piping connections (available only for models EFT-155, EFT-199, EFT-285 & EFT-399)

Field convertible from Natural to LP gas

Wall hung for space savings

No primary / secondary piping required on models EFT-55, EFT-80 & EFT-110 (minimum flow must be met)

Cascade up to 8 boilers - linked and sequenced to function together for commercial installations

The Best Option For Todays Green Energy Market!

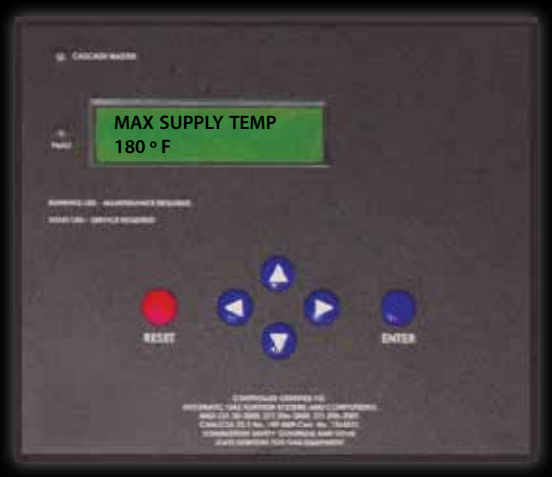

Control Interface - TSC

Outdoor Reset: a sensor measures the outside air temperature and adjusts the boiler set point to increase comfort and efficiency

Indirect water heater integration

Adjustable system freeze protection parameters

Ability to review boiler history

ModBus capability, and more....

Venting Options

Unbeatable combined vent length of up to 200 ft 3" PVC pipe (4" PVC pipe for EFT-399)

Vents with standard PVC, CPVC, AL29-4C, ULC636, or Flexible Polypro Pipe (HTP Approved)

Room air intake

Balanced or unbalanced venting system

Energy Star & AQMD Certified

Environmentally friendly

ENERGY STAR

AQMD

ULTRA Low NOx Emissions

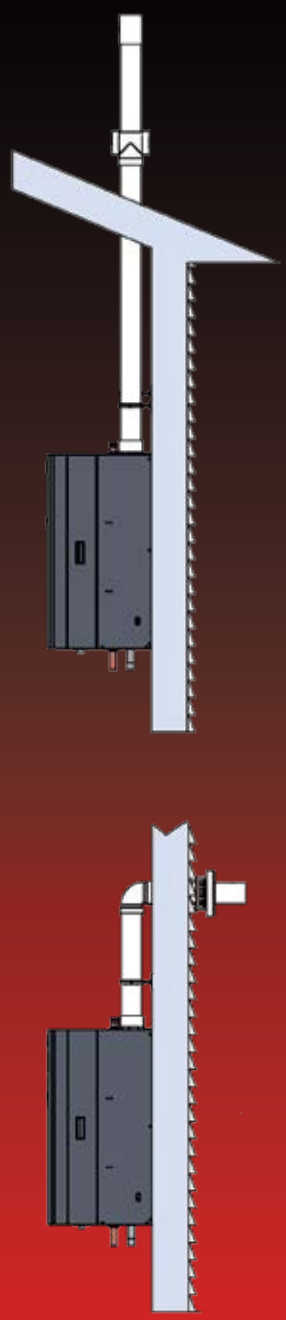

TSC TOTAL SYSTEM CONTROL

The EFT-399

Dimensions and Specifications

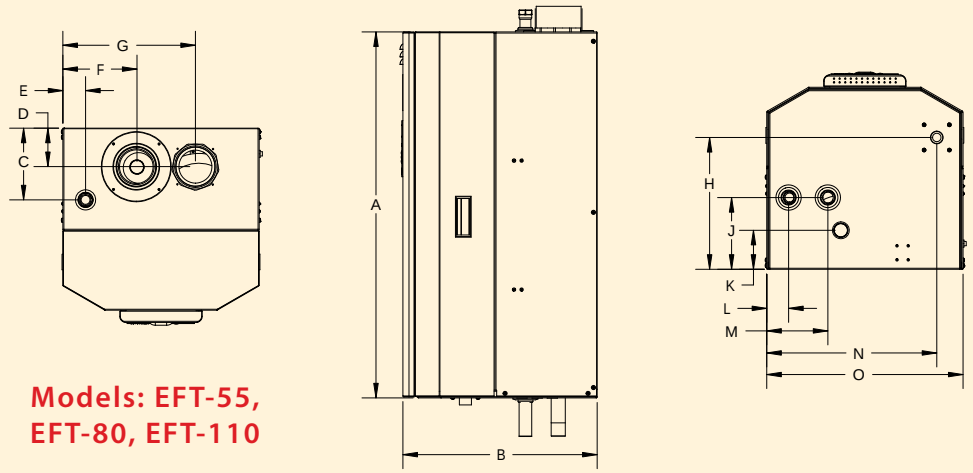

Models: EFT-55, EFT-80, EFT-110

Top View | Side View | Bottom View

Model	Max. MBH	Min. MBH	AFUE	Heating Capacity MBH	A	B	C	D	E	F	G	H	J	K	L	M	N	O
EFT-55	55	13	96.3	51	32 1/2"	17 3/8"	6 1/4"	3 1/2"	2 1/4"	6 1/2"	11 3/4"	12 1/2"	6 1/4"	3 1/2"	2"	5 1/2"	15"	17 1/2"
EFT-80	80	17	96.0	79														
EFT-110	110	22	95.6	102														

STANDARD FEATURES

- Up to 96% AFUE
- Modulating Burner
  - 5:1 Turndown Ratio
- Venting Options
  - Concentric
  - 3" Pipe: Balanced or Unbalanced
- Limited 12 Year Warranty
- Wall Mounted
- Total System Control
- The Elite FT is ASME Certified

INCLUDED IN THE BOX

- Temperature and Pressure Gauge
- Pressure Relief Valve 30 PSI (80 psi for EFT-285 & EFT-399 Models)
- Indirect Sensor & Outdoor Sensor
- Intake PVC w/ Screens
- Exhaust PVC Coupling w/ Screens
- Installation Manual
- Warranty
- Condensation Removal System
- Wall Mount

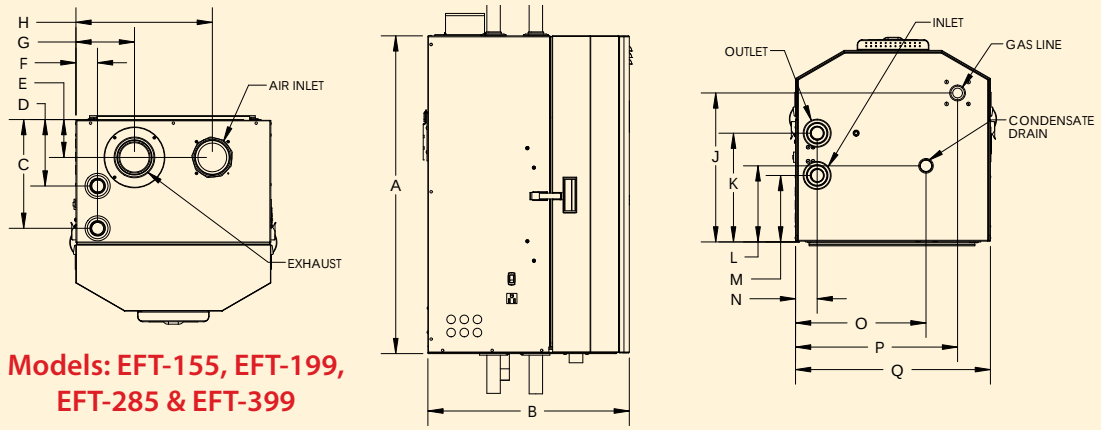

Models: EFT-155, EFT-199, EFT-285 & EFT-399

Top View | Side View | Bottom View

OPTIONAL EQUIPMENT

- ModBus Adapter
- 3", 4", 6" Stainless Steel Outside Termination Vent Kit
- 3" Concentric Vent Kit
- 3" Polypro Vent Kit
- 3" Polypro Pipe
- U.L. 353 Compliant Low Water Cutoff w/ Manual Reset
- Alarm System to Monitor Failures
- PC Connection Kit
- Condensate Neutralizer
- System Sensor
- 3 Speed Pump with integrated Flow Check

Model	Max. MBH	Min. MBH	AFUE	Heating Capacity MBH	A	B	C	D	E	F	G	H	J	K	L	M	N	O	P	Q
EFT-155	155	31	95.1	142	32 5/8"	20 5/8"	11 1/8"	6 7/8"	3 7/8"	2 1/4"	6"	14"	15 1/4"	11 1/8"	7 3/4"	6 7/8"	2 1/4"	13 3/8"	16 5/8"	20"
EFT-199	199	40	95.3	183																
EFT-285	285	57	95	262																
EFT-399	399	80	93.2*	367	36 3/8"	23 5/8"	13 5/8"	8 1/2"	4 3/4"	2 3/4"	7 3/8"	18 1/8"	18 3/4"	13 5/8"	9 3/4"	8 1/2"	2 3/4"	16 1/2"	19 1/4"	25 1/2"

* Thermal Efficiency (Not AFUE)

Model	BTU	Shipping Weight	Gas Conn.	Water Conn.	Air Inlet	Vent Size
EFT-55*	55,000	125 lbs.	3/4 "	1"	3"	3"
EFT-80*	80,000	128 lbs.				
EFT-110*	110,000	130 lbs.				
EFT-155*	155,000	195 lbs.		1 1/4		
EFT-199*	199,000	198 lbs.				
EFT-285*	285,000	203 lbs.				
EFT-399*	399,000	298 lbs.		1 1/2"	4"	4"

* add PU to end of stock code to include a pump

HTP Made In America

ULTRA Low NOx Emissions

MKTLIT-36 02/ 2014 © HTP INC

120 Braley Road, East Freetown, MA 02717 • TEL: 508-763-8071 • www.htproducts.com

Elite FT

Residential and Commercial Boilers

Installation

Start-Up

Maintenance

Parts

Warranty

EFT-55 / EFT-80 / EFT-110
EFT-155 / EFT-199 / EFT-285
EFT-399
Models*

*** "LP" Denotes Propane Gas Operation**

"PU" Denotes Included Pump

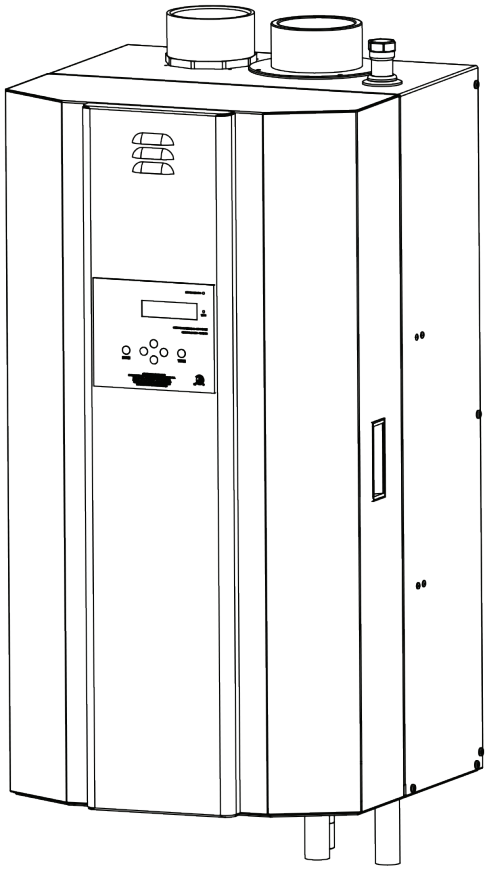

Heat Exchanger Bears the ASME "H" Stamp

ULTRA Low NOx Emissions SCAQMD Rule 1146.2

ENERGY STAR

C ETL LISTED US

AHRI CERTIFIED www.ahridirectory.org

DANGER

This manual must only be used by a qualified installer / service technician. Read all instructions in this manual before installing. Perform steps in the given order. Failure to do so could result in substantial property damage, severe personal injury, or death.

WARNING

Improper installation, adjustment, alteration, service, or maintenance could void product warranty and cause property damage, severe personal injury, or death.

NOTICE

HTP reserves the right to make product changes or updates without notice and will not be held liable for typographical errors in literature.

NOTE TO CONSUMER: PLEASE KEEP ALL INSTRUCTIONS FOR FUTURE REFERENCE.

272 Duchaine Blvd. New Bedford, MA 02745 www.htproducts.com

LP-387 Rev. 9.24.15

⚠ WARNING

IF THE INFORMATION IN THIS MANUAL IS NOT FOLLOWED EXACTLY, A FIRE OR EXPLOSION MAY RESULT, CAUSING PROPERTY DAMAGE, PERSONAL INJURY, OR LOSS OF LIFE. DO NOT STORE GASOLINE OR OTHER FLAMMABLE VAPORS AND LIQUIDS IN THE VICINITY OF THIS OR ANY OTHER APPLIANCE.

WHAT TO DO IF YOU SMELL GAS

- Do not try to light any appliance.
- Do not touch any electrical switch.
- Do not use any phone in your building.
- Immediately call your gas supplier from a neighbor's phone. Follow the gas supplier's instructions.
- If you cannot reach your gas supplier, call the fire department. Installation and service must be provided by a qualified installer, service agency, or the gas supplier.

FOR YOUR SAFETY READ BEFORE OPERATING

WARNING: If you do not follow these instructions exactly, a fire or explosion may result, causing property damage, personal injury or loss of life.

A. This appliance does not have a pilot. It is equipped with an ignition device which automatically lights the burner. Do not try to light the burner by hand.

B. BEFORE OPERATING smell all around the appliance area for gas. Be sure to smell next to the floor because some gas is heavier than air and will settle on the floor.

WHAT TO DO IF YOU SMELL GAS

- Do not try to light any appliance
- Do not touch any electric switch; do not use any phone in your building
- Immediately call your gas supplier from a neighbor's phone. Follow the gas suppliers' instructions.
- If you cannot reach your gas supplier, call the fire department.

C. Use only your hand to turn the gas control knob. Never use tools. If the handle will not turn by hand, don't try to repair it, call a qualified service technician. Force or attempted repair may result in a fire or explosion.

D. Do not use this appliance if any part has been under water. Immediately call a qualified service technician to inspect the appliance and to replace any part of the control system and any gas control which has been under water.

OPERATING INSTRUCTIONS

1. STOP! Read the safety information above.
2. Set the thermostat to lowest setting.
3. Turn off all electric power to the appliance.
4. This appliance is equipped with an ignition device which automatically lights the burner. Do not try to light the burner by hand.

GAS VALVE ON

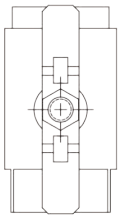

GAS VALVE OFF

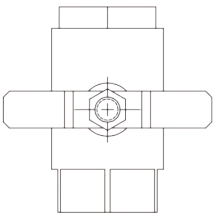

5. Remove front cover.
6. Turn gas shutoff valve to "off". Handle will be across the piping, do not force.
7. Wait five (5) minutes to clear out any gas. If you then smell gas, STOP! Follow "B" in the safety information above on this label. If you don't smell gas, go to next step.
8. Turn gas shutoff valve to "on". Handle will be in line with piping.
9. Install Front Cover.
10. Turn on all electric power to appliance.
11. Set thermostat to desired setting.
12. If the appliance will not operate, follow the instructions "To Turn Off Gas To Appliance" and call your service technician or gas supplier.

TO TURN OFF GAS TO APPLIANCE

1. Set the thermostat to lowest setting.
2. Turn off all electric power to the appliance if service is to be performed.
3. Remove Front Cover.
4. Turn gas shutoff valve to "off". Handle will be across the piping. Do not force.
5. Install Front Cover.

LP-175 Rev. 4 3-11-08

SPECIAL ATTENTION BOXES

The following defined terms are used throughout this manual to bring attention to the presence of hazards of various risk levels or to important product information.

DANGER

DANGER indicates an imminently hazardous situation which, if not avoided, will result in serious personal injury or death.

WARNING

WARNING indicates a potentially hazardous situation which, if not avoided, could result in personal injury or death.

CAUTION

CAUTION indicates a potentially hazardous situation which, if not avoided, may result in moderate or minor personal injury.

CAUTION

CAUTION used without the safety alert symbol indicates a potentially hazardous situation which, if not avoided, may result in property damage.

NOTICE

NOTICE is used to address practices not related to personal injury.

Foreword

This manual is intended to be used in conjunction with other literature provided with the boiler. This includes all related control information. It is important that this manual, all other documents included in this system, and additional publications including the *Code for the Installation of Heat Producing Appliances* and *National Fuel Gas Code - ANSI Z223.1* (latest versions), be reviewed in their entirety before beginning any work.

Installation should be made in accordance with the regulations of the Authority Having Jurisdiction, local code authorities, and utility companies which pertain to this type of water heating equipment.

Authority Having Jurisdiction (AHJ) – The AHJ may be a federal, state, local government, or individual such as a fire chief, fire marshal, chief of a fire prevention bureau, labor department or health department, building official or electrical inspector, or others having statutory authority. In some circumstances, the property owner or his/her agent assumes the role, and at government installations, the commanding officer or departmental official may be the AHJ.

NOTE: HTP, Inc. reserves the right to modify product technical specifications and components without prior notice.

For the Installer

This boiler must be installed by qualified and licensed personnel. The installer should be guided by the instructions furnished with the boiler, and by local codes and utility company requirements. In the absence of local codes, preference should be given to the *National Fuel Gas Code - ANSI Z223.1*, latest version.

Installations Must Comply With:

Local, state, provincial, and national codes, laws, regulations, and ordinances.

The latest version of the *National Fuel Gas Code, ANSI Z223.1*, from American Gas Association Laboratories, 8501 East Pleasant Valley Road, Cleveland, OH 44131.

In Canada - *CGA No. B149* (latest version), from Canadian Gas Association Laboratories, 55 Scarsdale Road, Don Mills, Ontario, Canada M3B 2R3. Also, *Canadian Electrical Code, C 22.1*, from Canadian Standards Association, 5060 Spectrum Way, Suite 100, Mississauga, Ontario, Canada L4W 5N6.

Code for the Installation of Heat Producing Appliances (latest version) from American Insurance Association, 85 John Street, New York, NY 11038.

The latest version of the *National Electrical Code, NFPA No. 70*.

NOTE: The gas manifold and controls met safe lighting and other performance criteria when undergoing tests specified in *ANSI Z21.13* - latest edition.

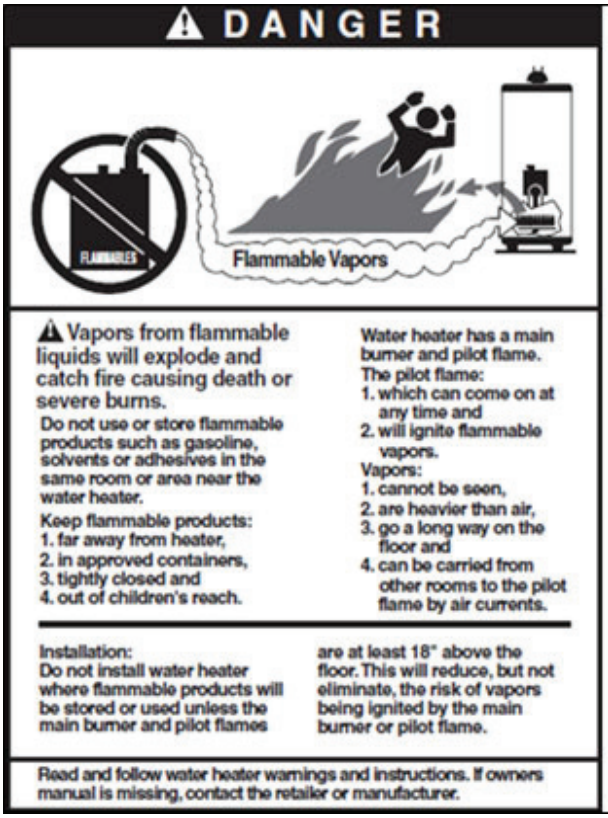

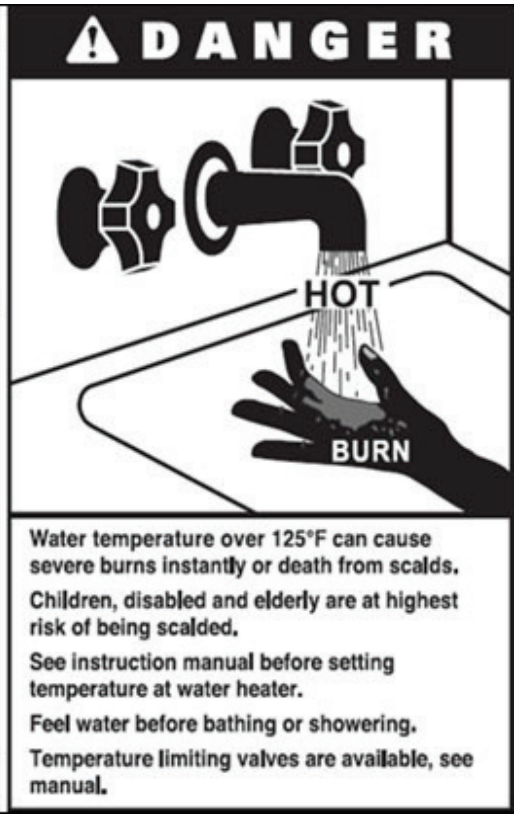

⚠ WARNING

The hydronic supply and return connections of these products are for installation in closed loop systems ONLY! Use of this product in any manner other than described in this manual may result in premature product failure, substantial property damage, severe personal injury, or death. Damage or failure of this product (or the system in which it is installed) due to unauthorized use **IS NOT COVERED BY WARRANTY.**

NOTICE

IMPORTANT

In accordance with Section 325 (f) (3) of the Energy Policy and Conservation Act, HTP, Inc. has provided this boiler with multiple features designed to save energy by reducing the boiler water temperature as heating load decreases.

These features include:

- **A modulating combustion system that adjusts firing rate based on heat demand.**
- **Adjustment of boiler set point based on inferred heat load as determined by an outdoor sensor. The outdoor sensor is supplied by HTP, Inc. with this boiler.**
- **This boiler does not include a standing pilot.**
- **This boiler is designed and shipped to assure the highest efficiency operation possible. Such high efficiency is achieved by limiting heating circuit water temperature to 140°F when there is no anticipated heat load, based upon the outdoor sensor and the Outdoor Reset Curve (sensor response curve) in the boiler software.**
- **This feature may be over-ridden as described below in specific installations:**
- **The boiler control is equipped with an outdoor sensor override for use with building management systems or in cascaded systems (for systems with total input of 300,000 BTU/hr or greater).**

See statement below for an important notice on the use of the override.

IMPORTANT

In accordance with Section 325 (f) (3) of the Energy Policy and Conservation Act, this boiler is equipped with a feature that saves energy by reducing the boiler water temperature as the heating load decreases. This feature is equipped with an override which is provided primarily to permit the use of an external energy management system that serves the same function. THIS OVERRIDE MUST NOT BE USED UNLESS AT LEAST ONE OF THE FOLLOWING CONDITIONS IS TRUE:

- **An external energy management system is installed that reduces the boiler water temperature as the heating load decreases.**
- **This boiler is not used for space heating.**
- **This boiler is part of a modular or multiple boiler system having a total input of 300,000 BTU/hr or greater.**
- **This boiler is equipped with a tankless coil.**

The CSD-1 ASME Code, Section CW-400 requires that hot water heating and supply boilers have a) a UL 353 temperature control device, b) at least one (1) temperature-actuated control to shut off the fuel supply when system water reaches a preset operating temperature, c) a high temperature limit control that prevents the water temperature from exceeding the maximum allowable temperature by causing a safety shutdown and lockout, and d) its own sensing element and operating switch.

The temperature control system integrated into the 926 control provided with this heating appliance complies with the requirements of CSD-1 Section CW-400 as a temperature operation control. The control monitors the temperature difference between the inlet and the outlet sensor, which is affected by boiler water flow. If this temperature difference exceeds 55°F (typically because of low water flow or very low heat load), the control will reduce the maximum fan speed. If the temperature difference exceeds 60°F, the control will effectively sense there is little or no water flow or heat load and shut the boiler down. The controller will restart automatically once the temperature difference has dropped below 55°F and the minimum off time (anti-cycle time) has expired. In addition, if the control senses that the outlet water temperature has reached 210°F, the boiler is put into a hard lockout and requires manual reset to restart.

Table of Contents

Part 1 - General Safety Information **5**
A. Improper Combustion 6
B. Gas 6
C. When Servicing the Boiler 6
D. Boiler Water 6
E. Freeze Protection 6
Part 2 - Before You Start **6**
A. What's in the Box 6
B. How the Boiler Operates 7
C. Optional Equipment 7
Part 3 - Prepare the Boiler **8**
A. Locating the Boiler 8
B. Structure 9
C. Leveling 9
D. Clearances for Service Access 9
E. Wall Mounting Considerations 10
F. Wall Mounting Instructions 10
1. Mounting to a Wood Studded Wall 10
2. Mounting to a Metal Frame 11
G. Residential Garage, Closet, and Alcove Installations 11
H. Exhaust Vent and Intake Pipe 11
1. Direct Vent of Exhaust and Intake 11
2. Indoor Combustion Air in Confined or Unconfined Space 12
I. Prevent Combustion Air Contamination 12
J. Removing a Boiler from a Common Vent System 12
I. Water Chemistry Requirements* 13
Part 4 - Piping **15**
A. General Plumbing Information 15
B. Relief Valve 15
C. Backflow Preventer 15
D. Potable Expansion Tank 15
E. Circulators 16
F. Hydronic Piping with Circulators, Zone Valves, and Multiple Boilers 16
G. Circulator Sizing 16
H. Check / Control Water Chemistry 18
I. Plumbing 18

J. Fill and Purge Heating System 19
K. Glycol Antifreeze Solutions 19
L. Zoning with Zone Valves 19
M. Zoning with Circulators 19
N. Multiple Boilers 19
O. Applications* 20
Part 5 - Venting and Condensate Removal 27
A. General 27
B. Approved Materials for Exhaust Vent and Intake Pipe 28
C. Additional Requirements for Installation in Canada 28
D. Exhaust Vent and Intake Pipe Location 29
E. Exhaust Vent and Intake Pipe Sizing 30
F. Longer Vent Runs 30
G. Exhaust Vent and Intake Pipe Installation 30
H. Applications 31
1. Direct Vent Installation of Exhaust and Intake 31
2. Venting Through an Existing System 33
3. Indoor Combustion Air in Confined or Unconfined Space 34
I. Condensate Removal System 35
Part 6 - Wiring 38
A. Installation Must Comply With 38
B. Field Wiring Terminations 38
C. Field Wiring 38
D. Line Voltage Wiring for Standard Boiler 38
E. Alarm Connections 39
F. Low Voltage Connections for Standard Boiler 39
G. Thermostat 39
H. Outdoor Sensor 39
I. Indirect Sensor 39
J. Optional 0-10 Volt Building Control Signal 40
K. Optional UL353 Low Water Cut-Off Interface Kit 40
L. Wiring of Cascade System Communication Bus 40
M. Cascade Master Pump and Sensor Wiring 41
N. Cascade Follower Pump and Sensor Wiring 41
Part 7 - Gas Connections 43
A. Gas Piping 43
B. Check Inlet Gas Pressure 44
C. Boiler Gas Valve 45
Part 8 - Start-Up Preparation 45
A. Check / Control Water Chemistry 45
B. Check for Gas Leaks 45
C. Freeze Protection (When Used) 46
D. Fill and Test Water System 46
E. Purge Air from Water System 46
F. Check Thermostat Circuit(s) 47
G. Condensate Removal 47
H. Final Checks Before Starting Boiler 47
I. Setting Up a Single Boiler 47
J. Setting Up a Cascaded System 47
K. Lockout Condition 48
L. Cascade System Programming 48
Part 9 - Start-Up Procedure 49
A. Control Overview 49
B. Navigation of the Display 49
C. Operating Instructions 49
D. Programming Boiler Settings 50
E. Programming the System Setting 50
F. System Setting Program Navigation 50
G. Resetting the Maintenance Schedule 52
Part 10 - Start-Up Procedures for the Installer 53
A. Boiler Control Status Menu 53
B. Cascade Menu 55
C. Boiler Test Mode 55
Part 11 - Troubleshooting 56
A. Boiler Error and Fault Codes 56
B. Boiler Error 56
C. Boiler Fault 56
D. User Interface Display 57
Part 12 - Maintenance 62
A. Procedures 62
B. Combustion Chamber Coil Cleaning Instructions 62
C. Cleaning Water Side of Heat Exchanger 63
D. Maintaining the Condensate System 63
Part 13 - Shutdown 64
A. Shutdown Procedure 64
B. Vacation Procedure 64
C. Failure to Operate 64
D. Important Notice 64
Part 14 - Installation Checklist 69
Part 15 - Maintenance Report 69
Limited Warranty 73
Maintenance Notes 75
Customer Installation Record Form 76

Part 1 - General Safety Information

This boiler is approved for indoor installations only and is not intended for use as a pool heater. Clearance to combustible materials: 6" top, bottom, sides, and 0" back. Left side has all boiler mechanical connections. Boiler must have room for service: 24" front is minimum recommended service clearance. (A combustible door or removable panel is acceptable front clearance.) This boiler has been approved for closet installation and installation on combustible flooring. Do not install directly on carpeting. Install the boiler in a location where temperature and pressure relief valve discharge or a leak will not result in damage to the surrounding area. If such a location is not available, install an auxiliary catch pan. Use only Category IV vent systems.

⚠ WARNING

Installer - Read all instructions in this manual before installing. Perform steps in the given order.

User - This manual is for use only by a qualified heating installer / service technician. Have this boiler serviced / inspected annually by a qualified service technician.

FAILURE TO ADHERE TO THE GUIDELINES ON THIS PAGE CAN RESULT IN SUBSTANTIAL PROPERTY DAMAGE, SEVERE PERSONAL INJURY, OR DEATH.

NOTE: If the boiler is exposed to the following, do not operate. Immediately call a qualified service technician.

1. Fire
2. Damage
3. Water

Failure to follow this information could result in property damage, severe personal injury, or death.

NOTE: Obey all local codes. Obtain all applicable permits before installing the boiler.

NOTE: Install all system components and piping in such a manner that does not reduce the performance of any fire rated assembly.

WARNING

DO NOT USE THIS BOILER IF ANY PART HAS BEEN SUBMERGED IN WATER. Immediately call a qualified service technician. The boiler MUST BE replaced if it has been submerged. Attempting to operate a boiler that has been submerged could create numerous harmful conditions, such as a potential gas leakage causing a fire and/or explosion, or the release of mold, bacteria, or other harmful particulates into the air. Operating a previously submerged boiler could result in property damage, severe personal injury, or death.
NOTE: Boiler damage due to flood or submersion is considered an Act of God, and IS NOT covered under product warranty.

Altering any HTP, Inc. boiler with parts not manufactured by HTP, Inc. WILL INSTANTLY VOID the boiler warranty and could result in property damage, personal injury, or death.

CAUTION

Do not use this boiler for anything other than its intended purpose (as described in this manual). Doing so could result in property damage and WILL VOID product warranty.

Due to the low water content of the boiler, improper sizing of the boiler with regard to heating system load will result in excessive cycling and accelerated component failure. HTP **DOES NOT** warrant failures caused by improperly sized boiler applications. **DO NOT** oversize the boiler to the system. Modular boiler installations greatly reduce the likelihood of boiler oversizing.

High heat sources (sources generating heat 100ºF / 37ºC or greater, such as stove pipes, space heaters, etc.) may damage plastic components of the boiler as well as plastic vent pipe materials. Such damages ARE NOT covered by warranty. It is recommended to keep a minimum clearance of 8" from high heat sources. Observe heat source manufacturer instructions, as well as local, state, provincial, and national codes, laws, regulations and ordinances when installing this boiler and related components near high heat sources.

A. Improper Combustion

WARNING

Do not obstruct the flow of combustion and ventilating air. Adequate air is necessary for safe operation. Failure to keep the exhaust vent and combustion air intake clear of ice, snow, or other debris could result in property damage, serious personal injury, or death.

B. Gas

Should overheating or gas supply fail to shut off, turn off the manual gas control valve to the boiler.

C. When Servicing the Boiler

WARNING

Be sure to disconnect electrical power before opening boiler cabinet or performing service. Failure to do so could result in electrical shock, property damage, serious personal injury, or death.

To avoid electric shock, disconnect electrical supply before performing maintenance.

NOTE: When inquiring about service or troubleshooting, reference the model and serial numbers from the boiler rating label.

To avoid severe burns, allow boiler and associated equipment to cool before servicing.

D. Boiler Water

- If you have an old system with cast iron radiators, thoroughly flush the system (without boiler connected) to remove sediment. The high-efficiency heat exchanger can be damaged by build-up or corrosion due to sediment. HTP recommends a suction strainer in this type of system.
- Do not use petroleum-based cleaning or sealing compounds in boiler system. Gaskets and seals in the system may be damaged, possibly resulting in substantial property damage.
- Do not use "homemade cures" or "boiler patent medicines". Substantial property damage, damage to boiler, and/or serious personal injury may result.
- Continual fresh make-up water will reduce boiler life. Mineral buildup in the heat exchanger reduces heat transfer, overheats the stainless steel heat exchanger, and causes failure. Addition of oxygen from make-up water can cause internal corrosion in system components. Leaks in the boiler or piping must be repaired at once.

NOTE: DO NOT add cold make up water to the system when the boiler is hot. Thermal shock can potentially cause cracks in the heat exchanger. Such damage IS NOT covered by warranty.

E. Freeze Protection

NOTE: Consider piping and installation when determining boiler location.

CAUTION

Failure of the boiler due to freeze related damage IS NOT covered by product warranty.

WARNING

NEVER use any toxic chemical, including automotive, standard glycol antifreeze, or ethylene glycol made for hydronic (non-potable) systems. These chemicals can attack gaskets and seals in water systems, are poisonous if consumed, and can cause personal injury or death.

Part 2 - Before You Start

NOTICE

UNCRATING THE BOILER - Any claims for damage or shortage in shipment must be filed immediately against the transportation company by the consignee.

Remove all sides of the shipping crate of the boiler.

A. What's in the Box

Components (and Part #) included with the boiler:

- Temperature and Pressure Gauge (7500P-098)
- Pressure Relief Valve (EFT-55/80/110/155/199 - 7250P-080, EFT-285/399 - 7350P-066)
- Wall Mount Bracket (EFT-55/80/110 - 7600P-021, EFT-155/199/285 - 7600P-121, EFT-399 - 7600P-221)
- Indirect Sensor (7250p-325)
- Outdoor Sensor (7250P-319)

- Intake PVC Tee with Screens
- Exhaust PVC Coupling with Screens
- Installation Manual and Warranty
- CSD-1 Form
- H-2 Data Sheet
- NG to LP Conversion Kit (Included with NG Models)

B. How the Boiler Operates

Elite FT® condensing technology intelligently delivers hydronic heating while maximizing efficiency. Outlined below are the features of the system and how they operate:

Stainless Steel Heat Exchanger

The highly efficient stainless steel heat exchanger is designed to extract all available heat from the supply line before it is exhausted.

Modulating Combustion System

The combustion system modulates the output of the burner during operation to match system demand and achieve the control set point while in operation. The set point can change by internal or external signals to enhance the overall performance of the system.

Control

The integrated control system monitors the system and regulates fan speed to control boiler output. This allows the boiler to deliver only the amount of heat energy required and nothing more.

The control can be set to monitor outdoor temperature through an outdoor sensor to regulate boiler set point. The system can be further enhanced by installing an indirect water heater to provide domestic hot water.

The control can regulate the output of multiple boilers through its cascade system function. The cascade system is capable of connecting up to eight boilers together in such a way that they function as one boiler system. This allows for greater turn down ratios and provides systematic control of the multiple boilers in an installation to minimize downtime and maximize efficiency.

The cascade system works by establishing one boiler as the master and the other connected boilers as followers. The master boiler requires a sensor to provide feedback on set point temperature in order to adjust heating input from the connected boilers. Each cascaded boiler will have its own pump to provide maximum flow and control heat exchanger flow rate.

Text Display and Operational LED Light Indicators

The display allows the user to change system parameters and monitor system outputs.

Gas Valve

Senses suction from the blower, allowing gas to flow only if powered and combustion air is flowing.

All Metal Integrated Venturi

Controls air and gas flow into the burner.

Burner

The high grade stainless steel burner uses premixed air and gas to provide a wide range of firing rates.

Spark Ignition

The burner is ignited by applying high voltage through the system spark electrode. The spark from the electrode ignites mixed gas off of the burner.

Supply Water Temperature Sensor

This sensor monitors the boiler outlet water temperature (System Supply). The control adjusts boiler firing rate so the supply temperature will match the boiler set point.

Return Water Temperature Sensor

This sensor monitors boiler return water temperature (System Return).

Flue Sensor

Monitors flue temperature and adjusts firing rate.

Temperature and Pressure Gauge

Allows the user to monitor system temperature and pressure.

Electrical field connections with terminal strips

The electrical cover allows easy access to the clearly marked line voltage and low voltage terminal strips to facilitate wiring the boiler.

Condensate Collection System

This boiler is a high efficiency appliance and will produce condensate. The condensate collection system has a float switch which monitors condensate level and prevents condensate from backing up into the combustion system. Inside the collection system is a built in trap which seals the combustion system from the connected drain. This condensate should be neutralized to avoid damage to the drainage system or piping.

Outdoor Sensor

Monitors outdoor temperature and adjusts unit set point to provide greater efficiency.

0-10 Volt Input

Allows the installer to connect a BMS (Building Management System) to control the boiler.

Condensate Flue Check System

The check system prevents heat exchanger exhaust from backing up into the cabinet.

Pump Service Mode

Allows manual operation of pumps to commission system and check pump operation.

The Vision II System (Optional)

Allows the user to supply mixed temperatures in up to eight zones. The Vision II system controls the temperature to each zone by employing three way mixing valves. The Vision II also controls the output temperature of the boiler to assure accurate temperature delivery to all connected zones.

C. Optional Equipment

Optional equipment available from HTP (and Part #):

- System Sensor (7250P-324)
- Indirect Sensor (7250P-325)
- 3" PVC Concentric Vent Kit (KGAVT0601CVT)
- 3" Stainless Steel Vent Termination Kit (V1000)
- 4" Stainless Steel Vent Termination Kit (V2000)
- 6" Stainless Steel Vent Termination Kit (V3000)
- 3" Polypro Vent Kit (8400P-001)
- 3" Polypro Pipe
  (33' length # 8400P-002, 49.5' length # 8400P-003)
- UL 353 Compliant Low Water Cut-Off Interface Kit with Manual Reset (EFT-55/80/110 - 7600P-104, All other Models - 7600P-990)
- Manual Reset High Limit (7450P-217)
- Alarm System (to monitor any failure) (7350P-602)
- PC Connection Kit (7250P-320)
- Condensate Neutralizer (EFT-55 - 285 - 7450P-212, EFT-399 - 7350P-611)
- Condensate Removal Pump (554200)
- Flow Switch Kit (7450P-213)

- Vision II (7250P-322)

NOTE: When using an optional system sensor, pipe insulation must be wrapped around it to improve temperature measurement accuracy and increase overall system efficiency.

Part 3 - Prepare the Boiler

Remove all sides of the shipping crate, and the wooden block that holds the boiler in place during shipping. Slide the boiler from the mounting bracket, which is affixed to the skid (Figure 1 and 2). Remove the mounting bracket from the crate (Figure 1). Take care to place the boiler in a safe location prior to installation to prevent damage to the mechanical connections.

CAUTION

COLD WEATHER HANDLING - If the boiler has been stored in a very cold location (BELOW 0ºF) before installation, handle with care until the components come to room temperature. Failure to do so could result in damage to the boiler.

Carefully consider installation when determining boiler location. Please read the entire manual before attempting installation. Failure to properly take factors such as boiler venting, piping, condensate removal, and wiring into account before installation could result in wasted time, money, and possible property damage and personal injury.

Figure 1 - Pallet with Mounting Bracket Affixed

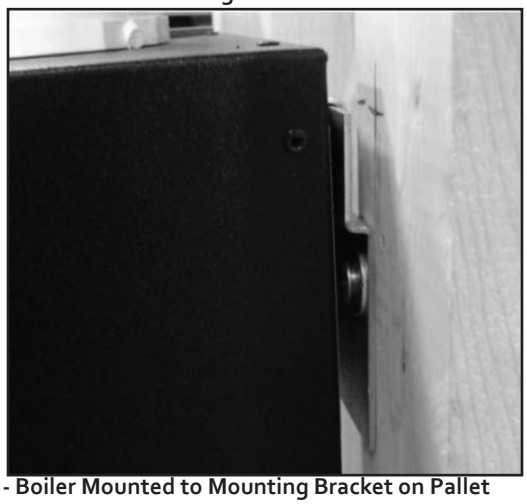

Figure 2 - Boiler Mounted to Mounting Bracket on Pallet

A. Locating the Boiler

WARNING

This boiler is certified for indoor use only. DO NOT INSTALL OUTDOORS. Outdoor installations ARE NOT covered by warranty. Failure to install the boiler indoors could result in property damage, severe personal injury, or death.

WARNING

Incorrect ambient conditions can lead to damage to the heating system and put safe operation at risk. Ensure that the installation location adheres to the information included in this manual. Failure to do so could result in property damage, serious personal injury, or death. Failure of boiler or components due to incorrect operating conditions IS NOT covered by product warranty.

1. Installation Area (Mechanical Room) Operating Conditions
   - Ensure ambient temperatures are higher than 32ºF / 0ºC and lower than 104ºF / 40ºC
   - Prevent the air from becoming contaminated by the products, places, and conditions listed in this manual
   - Avoid continuously high levels of humidity
   - Never close existing ventilation openings
   - Ensure a minimum 1" clearance around hot water and exhaust vent pipes
   - NOTE: To prevent condensing in the fan, it is recommended to avoid prolonged exposure to temperatures below 45ºF

WARNING

This boiler has a condensate disposal system that may freeze if exposed to sustained temperatures below 32ºF. Precautions should be taken to protect the condensate trap and drain lines from sustained freezing conditions. Failure to take precautions could result in property damage, severe personal injury, or death.

2. Check for nearby connections to:
   - System water piping
   - Venting connections
   - Gas supply piping
   - Electrical power
   - Condensate drain

3. Check area around boiler. Remove any combustible materials, gasoline, and other flammable liquids.

WARNING

Failure to keep the boiler area clear and free of combustible materials, liquids, and vapors can result in substantial property damage, severe personal injury, or death.

CAUTION

The service life of the boiler's exposed metallic surfaces, such as the casing, as well as internal surfaces, such as the heat exchanger, are directly influenced by proximity to damp and salty marine environments. In such areas higher concentration levels of chlorides from sea spray coupled with relative humidity can lead to degradation of boiler components. In these environments, boilers must not be installed using direct vent systems which draw outdoor air for combustion. Such boilers must be installed using room air for combustion. Indoor air will have a much lower relative humidity, and hence potential corrosion will be minimized.

CAUTION

High heat sources (generating heat 100ºF / 37ºC or greater, such as boiler flue pipes, space heaters, etc.) may damage plastic components of the boiler as well as plastic vent pipe materials. Such damages ARE NOT covered by warranty. It is recommended to keep a minimum clearance of 8" from high heat sources. Observe heat source manufacturer instructions, as well as local, state, provincial, and national codes, laws, regulations, and ordinances when installing this boiler and related components near high heat sources.

Locate the boiler where any leakage from the relief valve, related piping, tank, or connections will not result in damage to surrounding areas or lower floors of the building. The boiler should be located near a floor drain or installed in a drain pan. Leakage damages ARE NOT covered by warranty.

This boiler must be installed upright in the vertical position as described in this manual. DO NOT attempt to install this boiler in any other orientation. Doing so will result in improper boiler operation and property damage, and could result in serious personal injury or death.

Failure of the boiler or components due to incorrect operating conditions IS NOT covered by product warranty.

4. Gas control system components must be protected from dripping water during operation and service.

5. If the boiler is to replace an existing boiler, check for and correct any existing system problems, such as:

- System leaks
- Location that could cause the system and boiler to freeze and leak
- Incorrectly sized expansion tank

6. Clean and flush system when reinstalling a boiler.

NOTE: When installing in a zero clearance location, it may not be possible to read or view some product labeling. It is recommended to make note of the boiler model and serial number.

NOTE: A combustible door or removable panel is acceptable front clearance.

B. Structure

WARNING

Assure that the structure of the installation location is sufficient to support the full installed weight of the boiler, including water content of the heat exchanger and related piping. Failure to ensure the structure of the installation location is structurally sound before installation of the boiler can result in structural failure, substantial property damage, severe personal injury, or death.

C. Leveling

CAUTION

In order for the condensate to properly flow out of the collection system, the area where you locate the boiler must be level. Location must also fully support the weight of the filled boiler.

D. Clearances for Service Access

NOTE: If you do not provide the minimum clearances shown in Figure 3 it might not be possible to service the boiler without removing it from the space.

Minimum Clearances from Combustible Materials

- Hot water pipes - at least 1" from combustible materials
- Exhaust vent pipe - at least 1" from combustible materials

WARNING

Do not mount the boiler to a hollow wall. Mount to the studs only.

Use extreme care not to drop the boiler or cause bodily injury while lifting or mounting the boiler onto the wall mount bracket.

Failure to follow these instructions could result in property damage, severe personal injury, or death.

This boiler must be installed upright in the vertical position as described in this manual. DO NOT attempt to install this boiler in any other orientation. Doing so will result in improper boiler operation and property damage, and could result in serious personal injury or death.

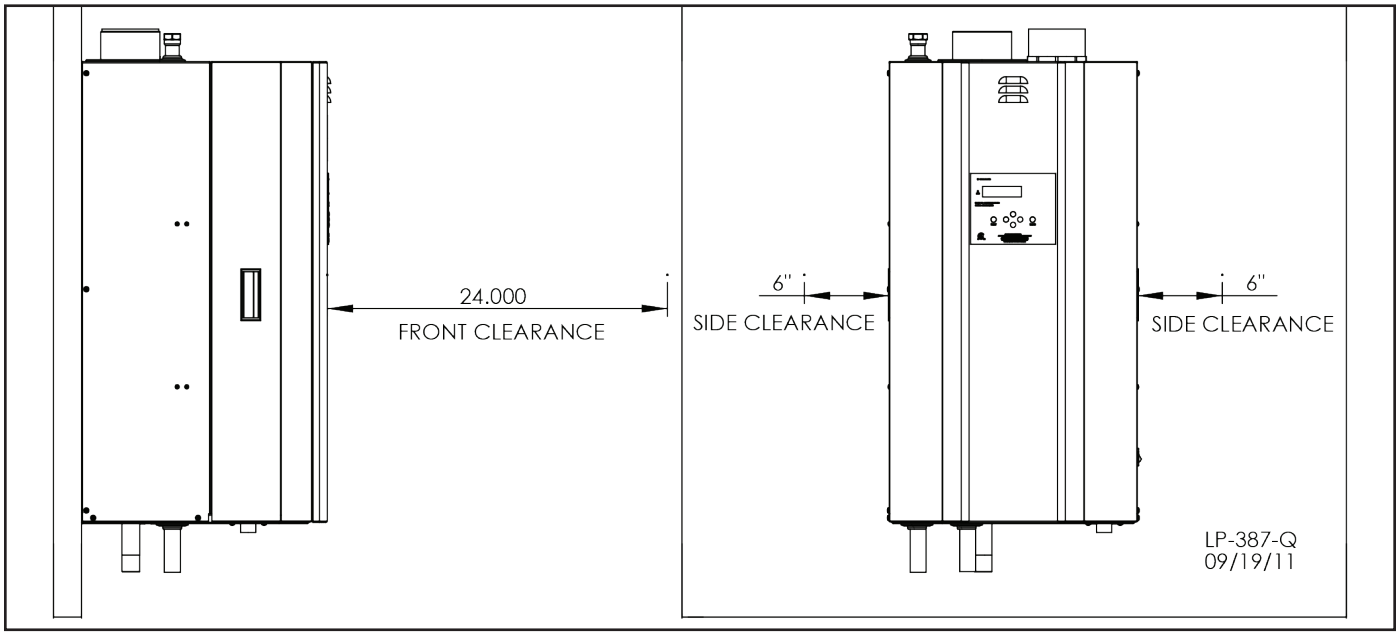

Figure 3 - Recommended Service Clearances

⚠ CAUTION

Always take future maintenance into consideration when locating the boiler. If the boiler is located in an installation location with limited clearances, it may be necessary to remove the boiler from the space to perform maintenance. Failure to consider maintenance when determining installation location could result in property damage.

⚠ WARNING

The space must be provided with combustion / ventilation air openings correctly sized for all other appliances located in the same space as the boiler. The boiler cover must be securely fastened to prevent the boiler from drawing air from the boiler room. This is particularly important if the boiler is in a room with other appliances. Failure to comply with the above warnings could result in substantial property damage, severe personal injury, or death.

CAUTION

All boilers eventually leak. It is recommended to install a catch pan beneath the boiler. This catch pan should be sized with a maximum depth of 2", and a minimum diameter 2" greater than the diameter of the boiler. The catch pan should empty into an open drain line. This drain line should be 3/4" ID minimum, piped to an open drain. Failure to follow these instructions could result in property damage. Such damages ARE NOT covered by product warranty.

E. Wall Mounting Considerations

These boilers are wall mounted. Use only the wall mounting instructions included in this manual.

Ensure the wall that the boiler is intended to be mounted on is comprised of cement, brick, block, or wooden studs spaced 16" apart from center. Ensure the wall is capable of supporting at least 250 lbs (115 kg) for EFT-55 – 110 models, 300 lbs (136 kg) for EFT-155 – 285 models, and 500 lbs (227 kg) for EFT-399.

If flooding is possible, elevate the boiler to prevent floodwater from reaching the boiler.

Ensure the boiler is installed in a location that minimizes the risk of water damage due to leaking valves, pumps, unions, etc.

⚠ WARNING

The mounting location must be capable of carrying the weight of the boiler and its related components. If the mounting location cannot support a minimum of 250 lbs. (115 kg), it is recommended to locate the boiler in a mounting location that can support the minimum weight. Failure to comply with the above and properly mount the boiler could result in substantial property damage, severe personal injury, or death.

F. Wall Mounting Instructions

⚠ WARNING

This boiler is too heavy for one person to lift. It is highly recommended to install the boiler with two people. Use caution as to not drop the boiler, which could damage the boiler and cause property damage and/or severe personal injury. Verify that the boiler is properly and securely mounted before leaving unsupervised. Failure to comply with the above and properly mount the boiler could result in substantial property damage, severe personal injury, or death.

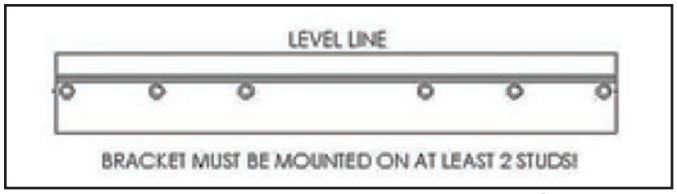

Figure 4 - Wall Mounting Bracket - NOTE: Drawing for Demonstration Purposes Only

⚠ WARNING

This wall mounting system is not seismic rated and should not be applied as such. Failure to comply with the above and properly mount the boiler could result in substantial property damage, severe personal injury, or death.

DO NOT use the bolts included in shipping for wall mounting the boiler. Doing so may result in property damage, serious injury, or death.

1. Mounting to a Wood Studded Wall

a. The building frame (studs) must be 2 X 4 minimum and 16" on center (24" on the EFT-399). If not, you must use ½" minimum plywood 24" x 48" with at least fourteen (14) #12 x 3" (3/16" x 3") round head tapping screws to the frame of the building to provide proper support for the boiler. No alternate methods of mounting or fastening (ex. Toggle bolts, hollow wall anchors, or any other fastener) may be used.

b. The provided mounting bracket must be mounted directly to the center of at least 2 studs using standard steel or stainless steel ¼" x 2 ½" lag bolts for all models. Be sure the bracket is level and mark the hole location of the bracket height and horizontal stud location. Ensure the marked holes are located in the center of the building frame (studs).

c. For all EFT models, 2 ½" is the minimum lag bolt length if the bracket is directly on stud. Increase lag bolt length for any materials covering the studs.

d. Predrill pilot holes on the marked stud locations. The pilot holes for bare studs should be 2" deep for all EFT models. See table below for pilot hole diameter by wood type. Increase length for any material covering the stud. Ensure that the predrilled holes are straight and square to the wall. Failure to do so could lead to insufficient support or out of level boiler. See Figure 4.

NOTE: Bolt must embed into the wood structure a minimum of 2".

e. Using the predrilled holes, mount the hanger bracket to the building frame (studs) using the appropriately sized standard steel (or stainless) lag bolt. Hang boiler on the wall mounted bracket. Be sure that the bracket is engaged before letting the boiler hang free. Slowly release the weight of the boiler while ensuring that the bracket is properly secured. Verify that the boiler is securely mounted before leaving the boiler unsupervised.

CAUTION

If the boiler is not installed upright, vertically plumb, and level, improper and unsatisfactory operation may occur, causing excessive condensation build-up, nuisance fault codes, and unnecessary maintenance.

Required Amount of Bolts for Wall-Mounting the Boiler	
Model	**Amount of Bolts**
EFT-55 - 110	2
EFT-155 - 285	4
EFT-399	6
Pilot Hole Size by Wood Type	
Type	**Drill Bit Size**
Soft	3/32"
Hard	3/16"

Table 1 - Bolts Required and Pilot Hole Size for Wall-Mounting the EFT Boiler

2. Mounting to a Metal Frame

a. The provided mounting bracket must be mounted to the center of at least 2 studs using standard steel or stainless steel toggle bolts 3/16" diameter or larger, and at least 2" long for direct mounting on stud for EFT-55 – 110 models, and 3/8" diameter or larger, and at least 2" long for EFT-155 – 399 models for direct mounting on at least 18 gauge studs. Be sure the bracket is level and mark the hole location of the top bracket height and horizontal stud location. Ensure the marked holes are located in the center of the building frame (studs).

b. 2" is the minimum toggle bolt length if the bracket is directly on stud. Increase length for any materials covering the studs.

c. Predrill holes on the marked stud locations. The predrilled holes should be ½" in diameter for 3/16" bolts, and ¾" in diameter for 3/8" bolts, to allow for the collapsed wings of the toggle to slide through. Ensure that the predrilled holes are straight and square to the wall. Failure to do so could lead to insufficient support of out of level boiler. See Figure 4.

d. Using the predrilled holes, mount the hanger bracket to the building frame (studs) with the toggle bolts. Ensure that the bolt toggles are through the stud and expanded catching the inside of the stud. Tighten the toggle bolt until the mounting bracket is secure. Hang boiler on the now wall mounted bracket. Be certain that the bracket is engaged before letting the boiler hang free. Slowly release the weight of the boiler while ensuring the bracket is properly secure. Verify that the boiler is securely mounted before leaving it unsupervised.

G. Residential Garage, Closet, and Alcove Installations

CAUTION

Check with your local Authority Having Jurisdiction for requirements when installing boiler in a garage, closet, or alcove. Please read the entire manual before attempting installation. Failure to properly take factors such as boiler venting, piping, condensate removal, and wiring into account before installation could result in wasted time, money, and possible property damage and personal injury.

Precautions

If the boiler is located in a residential garage, per ANSI Z223.1:

- Install the boiler burner and ignition devices a minimum of 18" above the floor of the garage. This will ensure the burner and ignition devices are well off the floor.
- Locate or protect the boiler so it cannot be damaged by a moving vehicle.

WARNING

For closet or alcove installations, a two pipe venting system must be used. Failure to follow this warning could result in substantial property damage, severe personal injury, or death.

WARNING

The space must be provided with correctly sized combustion/ventilation air openings for all other boilers located in the space with the boiler. Do not install the boiler in an attic. Failure to comply with these warnings could result in substantial property damage, severe personal injury, or death.

NOTE: For installations using room air for combustion, refer to the boiler venting section, this manual.

H. Exhaust Vent and Intake Pipe

The boiler is rated ANSI Z21.13 Category IV (pressurized vent, likely to form condensate in the vent) and requires a special vent system designed for pressurized venting.

NOTE: The venting options described here (and further detailed in the Venting section, this manual) are the lone venting options approved for this boiler. Failure to vent the boiler in accordance with the provided venting instructions will void the warranty.

DANGER

Failure to vent the boiler properly will result in serious personal injury or death.

WARNING

Do not attempt to vent this boiler by any means other than those described in this manual. Doing so will void the warranty and may result in severe personal injury or death.

Vents must be properly supported. Boiler exhaust and intake connections are not designed to carry heavy weight. Vent support brackets must be within 1' of the boiler and the balance at 4' intervals. Boiler must be readily accessible for visual inspection for first 3' from the boiler. Failure to properly support vents could result in property damage, severe personal injury, or death.

The exhaust discharged by this boiler may be very hot. Avoid touching or other direct contact with the exhaust gases of the vent termination assembly. Doing so could result in severe personal injury or death.

1. Direct Vent of Exhaust and Intake

If installing a direct vent option, combustion air must be drawn from the outdoors directly into the boiler intake and exhaust must terminate outdoors. There are three basic direct vent options detailed in this manual: 1. Side Wall Venting, 2. Roof Venting, and 3. Unbalanced Venting.

Be sure to locate the boiler such that the exhaust vent and intake piping can be routed through the building and properly terminated. Different vent terminals can be used to simplify and eliminate multiple penetrations in the building structure (see Optional Equipment in Venting Section). The exhaust vent and intake piping lengths, routing, and termination methods must all comply with the methods and limits given in the Venting Section, this manual.

When installing a combustion air intake from outdoors, care must be taken to utilize uncontaminated combustion air. **To prevent combustion air contamination, see Table 2.**

⚠ WARNING

Breathing Hazard - Carbon Monoxide Gas

- Do not operate heater if flood damaged.
- Install vent system in accordance with local codes and manufacturers installation instructions.
- Do not obstruct heater air intake or exhaust. Support all vent piping per manufacturers installation instructions.
- Do not place chemical vapor emitting products near unit.
- According to NFPA 720, carbon monoxide detectors should be installed outside each sleeping area.
- Never operate the heater unless it is vented to the outdoors.
- Analyze the entire vent system to make sure that condensate will not become trapped in a section of vent pipe and therefore reduce the open cross sectional area of the vent.

LP-304-FR

Breathing carbon monoxide can cause brain damage or death. Always read and understand instruction manual.

2. Indoor Combustion Air in Confined or Unconfined Space

This boiler requires fresh, uncontaminated air for safe operation and must be installed in a mechanical room where there is adequate combustion and ventilating air. **NOTE: To prevent combustion air contamination, see Table 2.**

Combustion air from the indoor space can be used if the space has adequate area or when air is provided through a duct or louver to supply sufficient combustion air based on the boiler input. Never obstruct the supply of combustion air to the boiler. If the boiler is installed in areas where indoor air is contaminated (see Table 2) it is imperative that the boiler be installed as direct vent so that all combustion air is taken directly from the outdoors into the boiler intake connection.

Unconfined space is space with volume greater than 50 cubic feet per 1,000 BTU/hr (4.8 cubic meters per kW) of the total input rating of all fuel-burning appliances installed in that space. Rooms connected directly to this space through openings not furnished with doors are considered part of the space. See Venting Section for details.

Confined space is space with volume less than 50 cubic feet per 1,000 BTU/hr (4.8 cubic meters per kW) of the total input rating of all fuel-burning appliances installed in that space. Rooms connected directly to this space through openings not furnished with doors are considered part of the space.

When drawing combustion air from inside a conventionally constructed building to a confined space, such space should be provided with two permanent openings: one located 6" (15 cm) below the space ceiling, the other 6" (15cm) above the space floor. Each opening should have a free area of one square inch per 1,000 BTU/hr (22cm²/kW) of the total input of all appliances in the space, but not less than 100 square inches (645cm²).

If the confined space is within a building of tight construction, air for combustion must be obtained from the outdoors as outlined in the Venting section of this manual.

CAUTION

When drawing combustion air from the outside into the mechanical room, care must be taken to provide adequate freeze protection.

⚠ WARNING

Failure to provide an adequate supply of fresh combustion air can cause poisonous flue gases to enter the living space, resulting in severe personal injury or death. To prevent combustion air contamination, see Table 2.

I. Prevent Combustion Air Contamination

Install intake air piping for the boiler as described in the Venting Section, this manual. Do not terminate exhaust in locations that can allow contamination of intake air.

⚠ WARNING

Ensure that the intake air will not contain any of the contaminants in Table 2. Contaminated air will damage the boiler, resulting in possible substantial property damage, severe personal injury, or death. For example, do not pipe intake air near a swimming pool or laundry facilities. These areas always contain contaminants.

J. Removing a Boiler from a Common Vent System

⚠ DANGER

Do not install the boiler into a common vent with any other appliance. This will cause flue gas spillage or appliance malfunction, resulting in possible substantial property damage, severe personal injury, or death.

⚠ WARNING

Failure to follow all instructions can result in flue gas spillage and carbon monoxide emissions, causing severe personal injury or death.

When removing an existing boiler, follow the steps below.

1. Seal any unused openings in the common venting system.
2. Visually inspect the venting system for proper size and horizontal pitch to determine if there is blockage, leakage, corrosion, or other deficiencies that could cause an unsafe condition.
3. If practical, close all building doors, windows, and doors between the space in which the boiler remains connected to the common venting system and other spaces in the building. Turn on clothes dryers and any appliances not connected to the common venting system. Turn on any exhaust fans, such as range hoods and bathroom exhausts, at maximum speed. Do not operate a summer exhaust fan. Close all fireplace dampers.
4. Place in operation the appliance being inspected. Follow the lighting instructions. Adjust the thermostat so the appliance will operate continuously.
5. Test for spillage at the draft hood relief opening after 5 minutes of main burner operation. Use the flame of a match or candle or smoke from a cigarette.
6. After it has been determined that each appliance remaining connected to the common venting system properly vents when tested as outlined, return doors, windows, exhaust fans, fireplace dampers, and any other gas burning appliances to their previous condition of use.
7. Any improper operation of the common venting system should be corrected to conform to the National Fuel Gas Code, ANSI Z223.1. When resizing any portion of the common venting system, the system should approach the minimum size as determined using the appropriate tables in Appendix

G of ANSI Z223.1.

Products to Avoid	Areas Likely to Have Contaminants
Spray cans containing fluorocarbons	Dry cleaning / laundry areas and establishments
Permanent wave solutions	Swimming pools
Chlorinated waxes / cleaners	Metal fabrication plants
Chlorine-based swimming pool chemicals	Beauty shops
Calcium chloride used for thawing	Refrigeration repair shops
Sodium chloride used for water softening	Photo processing plants
Refrigerant leaks	Auto body shops
Paint or varnish removers	Plastic manufacturing plants
Hydrochloric or Muriatic acid	Furniture refinishing areas and establishments
Cements and glues	New building construction
Antistatic fabric softeners used in clothes dryers	Remodeling areas
Chlorine-type bleaches, laundry detergents, and cleaning solvents	Garages and workshops
Adhesives used to fasten building products	

Table 2 - Products and Areas Likely to Have Contaminants

NOTE: DAMAGE TO THE BOILER CAUSED BY EXPOSURE TO CORROSIVE VAPORS IS NOT COVERED BY WARRANTY. (Refer to the limited warranty for complete terms and conditions.)

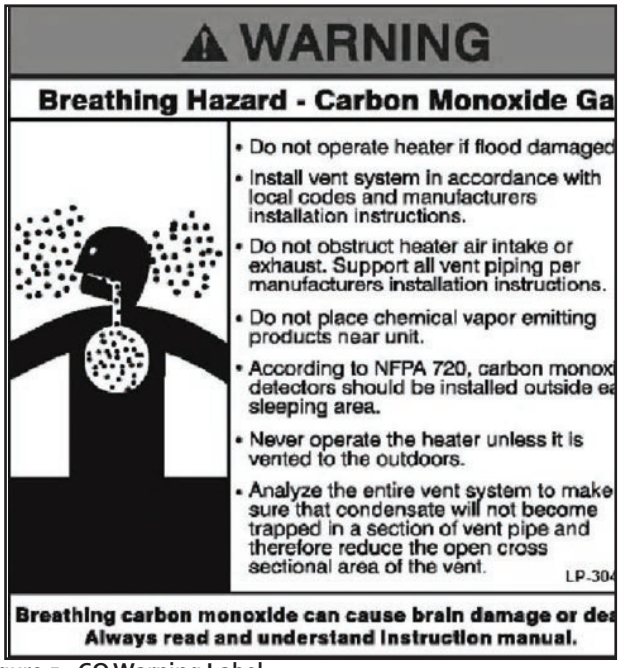

Figure 5 - CO Warning Label

I. Water Chemistry Requirements*

CAUTION

Chemical imbalance of the water supply may affect efficiency and cause severe damage to the boiler and associated equipment. HTP recommends having water quality professionally analyzed to determine whether it is necessary to install a water softener. It is important that the water chemistry on both the domestic hot water and central heating sides are checked before installing the boiler, as water quality will affect the reliability of the system. Failure of a boiler due to lime scale build-up, low pH, or other chemical imbalance IS NOT covered by the warranty.

- Sodium less than 20 mGL
- Water pH between 6.0 and 8.0
  - Maintain water pH between 6.0 and 8.0. Check with litmus paper or have it chemically analyzed by water treatment company.
  - If the pH differs from above, consult local water treatment for treatment needed.
- Hardness less than 7 grains
  - Consult local water treatment companies for unusually hard water areas (above 7 grains hardness).
- Chlorine concentration less than 100 ppm
  - Using chlorinated fresh water should be acceptable as levels are typically less than 5 ppm.
  - Do not connect the boiler to directly heat swimming pool or spa water.
  - Do not fill boiler or operate with water containing chlorine in excess of 100 ppm.

***NOTE:** It is recommended to clean the heat exchanger at least once a year to prevent lime scale buildup. To clean the heat exchanger, follow the maintenance procedure in this manual.

Hardness: Less than 7 grains
Chloride levels: Less than 100 ppm
pH levels: 6 - 8
Conductivity: Less than 400 uS/cm at 25°C
Sodium: Less than 20 mGL
Copper: Less than 0.1 mg/:
Iron: Less than 0.5 mg/L

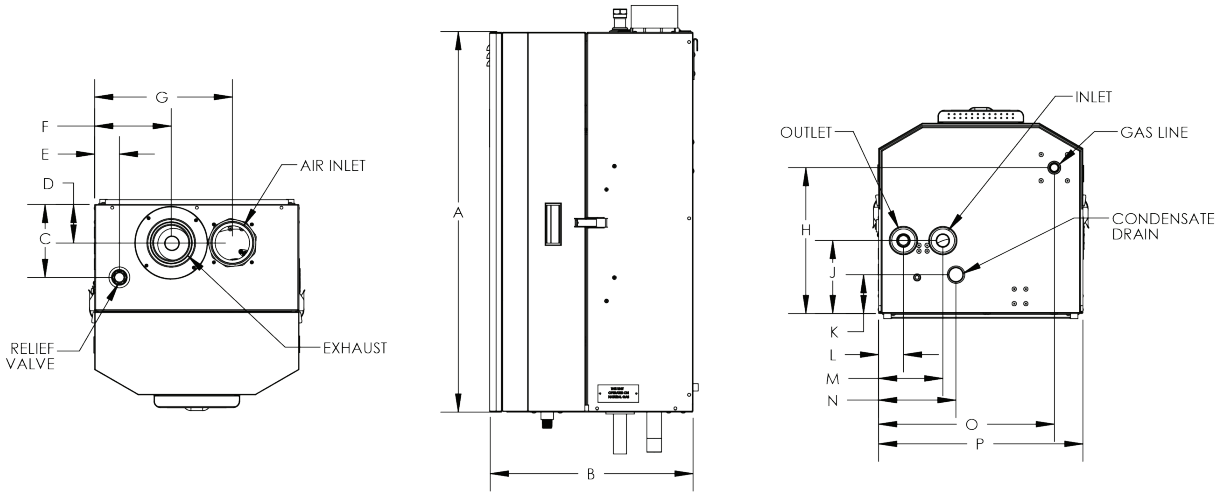

MODEL	MAX. MBH	MIN. MBH	AFUE	HEATING CAPACITY MBH	A	B	C	D	E	F	G	H	J	K	L	M	N	O	P
EFT-55	55	11	96.3	51	32-1/2"	17-3/8"	6-1/4"	3-1/2"	2-1/4"	6-1/2"	11-3/4"	12-1/2"	6-1/4"	3-1/2"	2"	5-1/2"	6-1/2"	15"	17-1/2"
EFT-80	80	17	96.0	79															
EFT-110	110	22	95.6	102															

MODEL	GAS CONNECTION	WATER CONNECTION	AIR INLET	VENT SIZE	PSI RATING	SHIPPING WT. (LBS)
EFT-55	3/4"	1"	3"	3"	30 PSI	125
EFT-80						128
EFT-110						130

LP-387-K
07/12/13

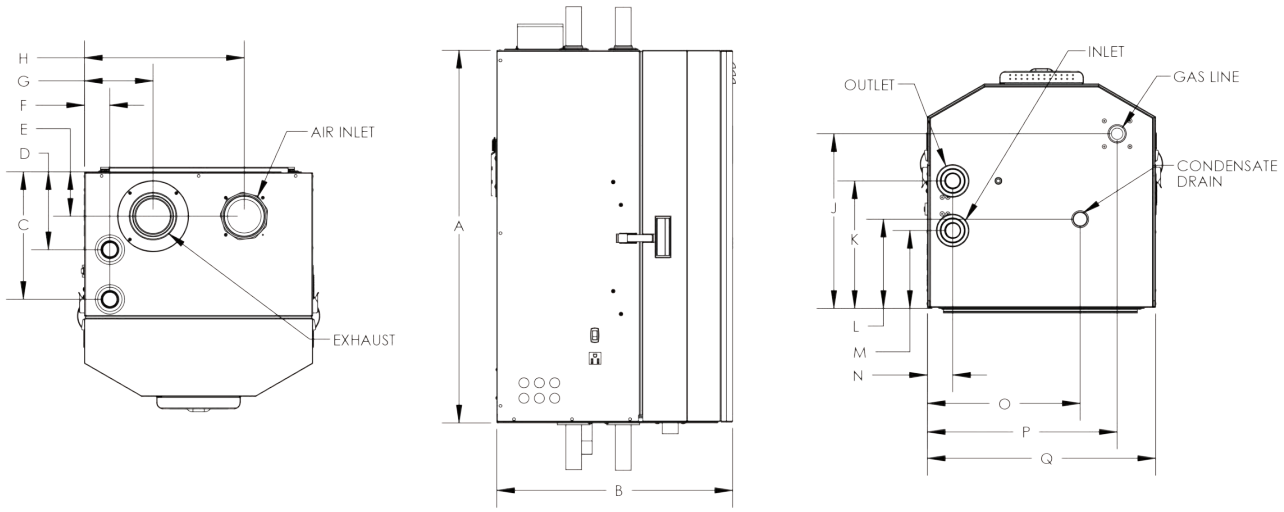

MODEL	MAX MBH	MIN MBH	AFUE	HEATING CAP. MBH	A	B	C	D	E	F	G	H	J	K	L	M	N	O	P	Q
EFT-155	155	31	95.1	142	32-5/8"	20-5/8"	11-1/8"	6-7/8"	3-7/8"	2-1/4"	6"	14"	15-1/4"	11-1/8"	7-3/4"	6-7/8"	2-1/4"	13-3/8"	16-5/8"	20"
EFT-199	199	40	95.3	183																
EFT-285	285	57	95.0	262																
EFT-399	399	80	93.2 *	367	36-3/8"	23-5/8"	13-5/8"	8-1/2"	4-3/4"	2-3/4"	7-3/8"	18-1/8"	18-3/4"	13-5/8"	9-3/4"	8-1/2"	2-3/4"	16-1/2"	19-1/4"	25-1/2"

* THERMAL EFFICIENCY (NOT AFUE)
ALL DIMENSIONS ARE APPROXIMATE

MODEL	GAS CONNECTION	WATER CONNECTION	AIR INLET	VENT SIZE	PSI RATING	SHIPPING WT. (LBS)
EFT-155	3/4"	1-1/4"	3"	3"	30 PSI	195
EFT-199						198
EFT-285	1"				80 PSI	203
EFT-399		1-1/2"	4"	4"		298

LP-387-K2
07/12/13

Figure 6 - Boiler Dimensions - NOTE: All Dimensions Are Approximate

Part 4 - Piping

⚠ WARNING

Failure to follow the instructions in this section WILL VOID the warranty and may result in property damage, severe personal injury, or death.

The National Standard Plumbing Code, the National Plumbing Code of Canada, and the Uniform Plumbing Code limit heat transfer fluid pressure to less than the minimum working pressure of the potable water system up to 30 PSI maximum. In addition, the heat transfer fluid must be water or another non-toxic fluid having a toxicity of Class 1, as listed in Clinical Toxicology of Commercial Products, 5th Edition. Failure to follow this warning could result in property damage, severe personal injury, or death.

CAUTION

Dielectric unions or galvanized steel fittings must not be used in a system with this boiler. Doing so WILL VOID the warranty. Use only copper, brass, or stainless steel fittings. Teflon thread sealant must be used on all connections.

Plumbing of this product should only be done by a qualified, licensed plumber in accordance with all local plumbing codes. The boiler may be connected to an indirect water heater to supply domestic hot water. HTP offers indirect water heaters in a wide range of gallon sizes in either stainless steel or glass-lined construction.

A. General Plumbing Information

CAUTION

The building piping system must meet or exceed the the piping requirements in this manual.

Use two wrenches when tightening water piping at boiler. Use one wrench to prevent the boiler return or supply line from turning. Failure to prevent piping connections from turning could cause damage to boiler components.

The control module uses temperature sensors to provide both high limit protection and modulating temperature control. The control module may also provide low water protection (through the addition of an optional kit) by sensing the water level in the heat exchanger. An optional flow switch may be installed on the supply of the system to activate the boiler when there is enough flow. Some codes/jurisdictions may require additional external controls.

NOTE: The addition of a high temperature limiting device is important if the boiler is to be connected to a domestic hot water system.

B. Relief Valve

Connect discharge piping to a safe disposal location following the guidelines below.

⚠ WARNING

To avoid water damage or scalding due to relief valve operation:

- Discharge line must be connected to relief valve outlet and run to a safe place of disposal. Terminate the discharge line in a manner that will prevent possibility of severe burns or property damage should the relief valve discharge.
- Discharge line must be as short as possible and the same size as the valve discharge connection throughout its entire length.
- Discharge line must pitch downward from the valve and terminate at least 6" above the floor drain, making discharge clearly visible.
- The discharge line shall terminate plain, not threaded, with a material serviceable for temperatures of 375°F or greater.
- Do not pipe discharge to any location where freezing could occur.
- No valve may be installed between the relief valve and boiler or in the discharge line. Do not plug or place any obstruction in the discharge line.
- Test the operation of the relief valve after filling and pressurizing the system by lifting the lever. Make sure the valve discharges freely. If the valve fails to operate correctly, immediately replace with a new properly rated relief valve.
- Test T&P valve at least once annually to ensure the waterway is clear. If valve does not operate, turn the boiler "off" and call a plumber immediately.
- Take care whenever operating relief valve to avoid scalding injury or property damage.

FAILURE TO COMPLY WITH THE ABOVE GUIDELINES COULD RESULT IN FAILURE OF RELIEF VALVE OPERATION, RESULTING IN POSSIBILITY OF SUBSTANTIAL PROPERTY DAMAGE, SEVERE PERSONAL INJURY, OR DEATH.

⚠ WARNING

Do not thread a cap or plug into the relief valve or relief valve line under any circumstances! Explosion and property damage, serious injury, or death may result.

RE-INSPECTION OF T&P RELIEF VALVES: T&P valves should be inspected AT LEAST ONCE EVERY THREE YEARS, and replaced if necessary, by a licensed plumbing contractor or qualified service technician to ensure that the product has not been affected by corrosive water conditions and to ensure that the valve and discharge line have not been altered or tampered with illegally. Certain naturally occuring conditions may corrode the valve and its components over time, rendering the valve inoperative. Such conditions can only be detected if the valve and its components are physically removed and inspected. **Do not attempt to conduct an inspection on your own.** Contact your plumbing contractor for a re-inspection to assure continued safety.

FAILURE TO RE-INSPECT THE T&P VALVE AS DIRECTED COULD RESULT IN UNSAFE TEMPERATURE AND/OR PRESSURE BUILD-UP WHICH CAN RESULT IN PROPERTY DAMAGE, SERIOUS PERSONAL INJURY, OR DEATH.

C. Backflow Preventer

Use a backflow preventer specifically designed for hydronic boiler installations. This valve should be installed on the cold water fill supply line per local codes.

D. Potable Expansion Tank

Expansion Tank and Make-Up Water

1. Ensure that the expansion tank is sized to correctly handle boiler and system water volume and temperature.

WARNING

Expansion tanks must be sized according to total system volume. This includes all length of pipe, all fixtures, boilers, etc. Failure to properly size for system expansion could result in wasted time, money, possible property damage, serious injury, or death.

CAUTION

Undersized expansion tanks cause system water to be lost from the relief valve, causing make-up water to be added. Eventual boiler failure can result due to excessive make-up water addition. **SUCH FAILURE IS NOT COVERED BY WARRANTY.**

DO NOT install automatic air vents on closed type expansion tank systems. Air must remain in the system and return to the tank to provide an air cushion. An automatic air vent would cause air to leave the system, resulting in improper operation of the expansion tank.

Expansion Tank Sizing	
Model	Heat Exchanger Volume (Gallons)
55 / 80	2.2
110	2.6
155	6.2
199	6.1
285	6.1
399	7.9

Table 3 - Expansion Tank Sizing

2. The expansion tank must be located as shown in Applications, this manual, or following recognized design methods. See expansion tank manufacturer's instructions for details.

3. Connect the expansion tank to the air separator only if the air separator is on the suction side of the circulator. Always install the system fill connection at the same point as the expansion tank connection to the system.

4. Most chilled water systems are piped using a closed type expansion tank.

DIAPHRAGM (OR BLADDER) EXPANSION TANK

Always install an automatic air vent on top of the air separator to remove residual air from the system.

E. Circulators

CAUTION

DO NOT use the boiler circulator in any location other than the ones shown in this manual. The boiler circulator location is selected to ensure adequate flow through the boiler. Failure to comply with this caution could result in unreliable performance and nuisance shutdowns from insufficient flow.

Sizing Space Heat System Piping

1. See Applications in this manual. In all diagrams, the space heating system is isolated from the boiler loop by the primary/secondary connection.

2. Size the piping and components in the space heating system using recognized design methods.

F. Hydronic Piping with Circulators, Zone Valves, and Multiple Boilers

This boiler is designed to function in a closed loop hydronic system. It is recommended to install a temperature and pressure gauge (not included with the boiler) to allow the user to monitor system pressure and outlet temperature from the boiler. It is important to note that the boiler has a minimal amount of pressure drop that must be calculated when sizing the circulators. Unless the system has a closed type expansion tank, each boiler installation must have an air elimination device that will remove air from the system.

Install the boiler so the gas ignition system components are protected from water (dripping, spraying, etc.) Allow clearance for basic service of boiler circulator, valves and other components.

Observe the minimum 1" clearance around all uninsulated hot water pipes when openings around pipes are not protected by non-combustible materials.

On a boiler installed above radiation level, some states and local codes require a low water cut off device, which is an optional part available through HTP (Part # 7600P-104 for 55 – 110 models, 7600P-990 for 155 – 399 models). Check with local codes for additional requirements. If the boiler supplies hot water to heating coils in air handler units, flow control valves or other devices must be installed to prevent gravity circulation of boiler water in the coils during the cooling cycle.

Chilled water medium must be piped in parallel with, and isolated from, the boiler. Freeze protection for new or existing systems must use glycol that is specifically formulated for this purpose. Antifreeze must include inhibitors that will prevent the glycol from attacking the metallic system components. Make certain that the system fluid is checked for the correct glycol concentration and inhibitor level. The system should be tested at least once a year and as recommended by the producer of the glycol solution. Allowance should be made for the expansion of the glycol solution in the system piping. Example: 50% by volume glycol solution expands 4.8% in volume for a temperature increase from 32°F to 180°F, while water expands 3% with the same temperature rise.

G. Circulator Sizing

In addition, the heat exchanger has a minimum total water volume that must be taken into account when sizing the circulator. Minimum flow rates are listed in the table below.

Minimum Boiler Flow Rates	
Model	Minimum Flow (GPM)
55	3.5
80	5.4
110	7
155	9.7
199	12.5
285	17.9
399	25

Table 4 - Minimum Flow Rates

The heat exchanger has a pressure drop that must be considered in your system design. Refer to Figure 7 for pressure drop through the heat exchanger.

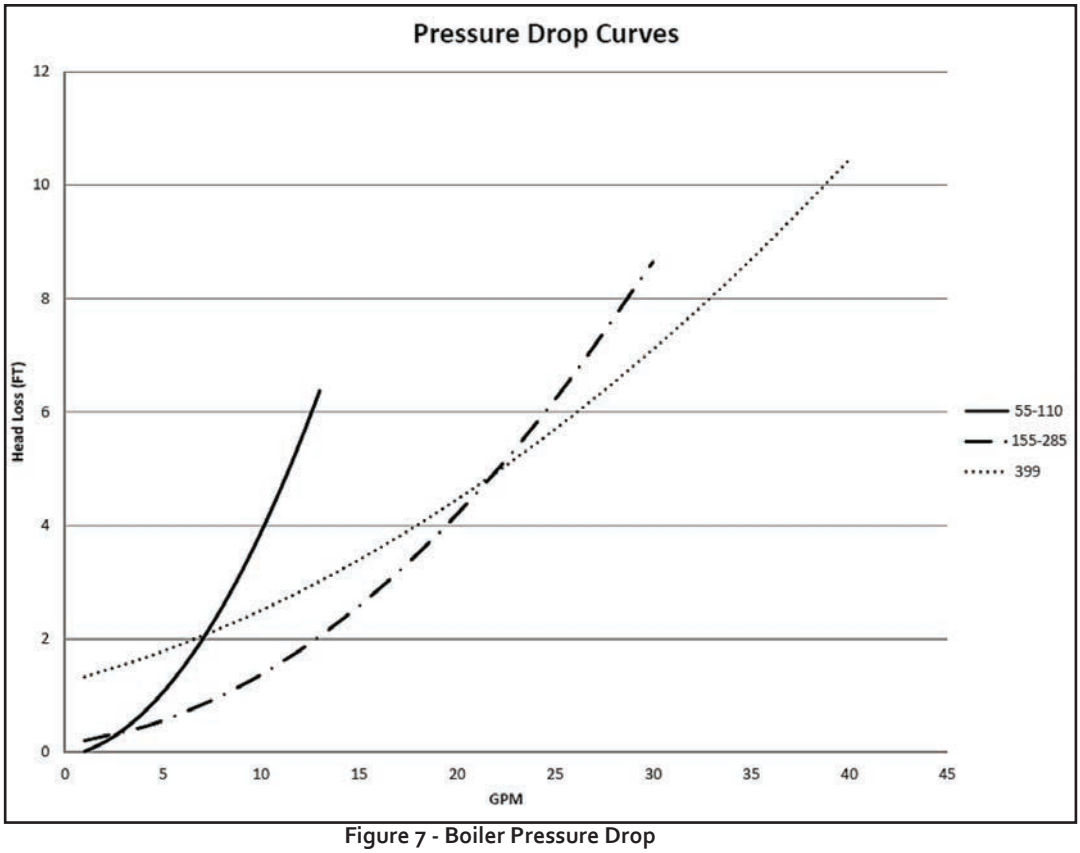

Figure 7 - Boiler Pressure Drop

The chart below represents various system design temperature rise through the boiler along with respective flows and friction loss. This is provided to aid in circulator selection.

System Temperature Rise Chart						
	20°Δt		25°Δt		30°Δt	
Model	Friction Ft	Flow Rate (GPM)	Friction Ft	Flow Rate (GPM)	Friction Ft	Flow Rate (GPM)
55	1.8′	5.3	1.1′	4.2	0.8′	3.5
80	2.8′	8.2	1.9′	6.5	1.3′	5.4
110	4.3′	10.6	2.9′	8.4	1.8′	7
155	2.5′	14.6	1.7′	11.7	1.3′	9.7
199	3.7′	18.7	2.6′	15	1.9′	12.5
285	7′	26.8	4.7′	21.4	3.5′	17.9
399	9.5′	37.5	7.1′	30	5.7′	25

Table 5 - Temperature Rise, Friction Ft and Flow Rate

The chart below represents the combined flow rates and pipe sizes when using multiple boilers to design the manifold system for the primary circuit. To size, simply add up the number of boilers and the required flow rates for the system design temperature. Example: (5) EFT-55 boilers with a design of 20°Δt degree temperature rise with each boiler having an individual flow rate of 5.3 GPM. To correctly size the manifold feeding these (5) boilers you would need a pipe size of 2″.

Multiple Boiler Manifold Piping											
Maximum Flow Rate (GPM at 3 Feet per Second)	8	14	19	31.5	45	69	93	120	150	188	271
Schedule 40 Pipe Dia. (In.)	1	1 1/4	1 1/2	2	2 1/2	3	3 1/2	4	4 1/2	5	6

Table 6 - Multiple Boiler Manifold Piping

H. Check / Control Water Chemistry

NOTE: Boiler failure due to improper water chemistry is not covered by warranty.

Water Chemistry*

- Sodium less than 20 mGL
- Water pH between 6.0 and 8.0
  - Maintain water pH between 6.0 and 8.0. Check with litmus paper or have it chemically analyzed by water treatment company.
  - If the pH differs from above, consult local water treatment for treatment needed.
- Hardness less than 7 grains
  - Consult local water treatment companies for unusually hard water areas (above 7 grains hardness).
- Chlorine concentration less than 100 ppm
  - Using chlorinated fresh water should be acceptable as levels are typically less than 5 ppm.
  - Do not connect the boiler to directly heat swimming pool or spa water.
  - Do not fill boiler or operate with water containing chlorine in excess of 100 ppm.

***NOTE:** It is recommended to clean the heat exchanger at least once a year to prevent lime scale buildup. To clean the heat exchanger, follow the maintenance procedure in this manual.

Hardness: Less than 7 grains
Chloride levels: Less than 100 ppm
pH levels: 6 - 8
Conductivity: Less than 400 uS/cm at 25°C
Sodium: Less than 20 mGL
Copper: Less than 0.1 mg/:
Iron: Less than 0.5 mg/L

Clean system to remove sediment*

1. You must thoroughly flush the system (without boiler connected) to remove sediment. The high-efficiency heat exchanger can be damaged by buildup or corrosion due to sediment.
2. For zoned systems, flush each zone separately through a purge valve. (If purge valves and isolation valves are not already installed, install them to properly clean the system.)
3. Flush system until water runs clean and you are sure piping is free of sediment.

***NOTE:** It is recommended you clean heat exchanger at least once a year to prevent lime scale buildup. Follow the maintenance procedure to clean the heat exchanger in the Maintenance Section of this manual.

Test/replace freeze protection fluid

1. For systems using freeze protection fluids, follow fluid manufacturer's instructions to verify inhibitor level and that other fluid characteristics are satisfactory.
2. Freeze protection fluid must be replaced periodically due to degradation of inhibitors over time. Follow all fluid manufacturer instructions.

Piping Components

Heating System Piping

System piping MUST be sized per technical pipe requirements listed in Tables 6 and 7. Reducing pipe size can restrict flow rate through the boiler, causing inadvertent short cycling and poor system performance.

Check Valves

Field supplied. Check valves are recommended for installation as shown in Applications.

Isolation Valves

Field supplied. Full port ball valves are required. Failure to use full port ball valves could result in a restricted flow rate through the boiler.

Anti-Scald Mixing Valve

Field supplied. An anti-scald mixing valve is recommended when storing domestic hot water above 115°F.

Unions

Field supplied. Recommended for unit serviceability. DO NOT USE DIELECTRIC UNIONS! ONLY BRASS, COPPER, OR STAINLESS STEEL.

Pressure Relief Valve

Factory supplied on boiler. The pressure relief valve is sized to ASME specifications. Storage tank may require additional relief valves depending on local codes.

Model	Minimum Pipe Sizes
55 / 80 / 110	1" NPT
155 / 199 / 285	1 1/4" NPT
399	1 1/2" NPT

Table 7 - Minimum Pipe Sizes

I. Plumbing

CAUTION

This boiler should not be operated as a potable hot water heater. It should not be used as a direct hot water heating device.

NOTE: Observe the minimum 1" clearance around all uninsulated hot water pipes when openings around pipes are not protected by non-combustible materials.

Basic steps are listed below, with illustration that will guide you through the installation of the boiler.

1. Connect the system return marked "Boiler Return".
2. Connect the system supply marked "Boiler Supply".
3. Install a purge and balance valve or shut off valve and drain on the system return to purge air out of each zone.
4. Install a back flow preventer on the cold feed make-up water line.
5. Install a pressure reducing valve on the cold feed make-up water line (15 psi nominal on the system return). This boiler has a maximum working pressure of 160 psi. You may order a higher pressure relief valve kit from the factory. Check temperature and pressure gauge when operating. It should read a minimum pressure of 12 psi.
6. Install a circulator as shown in Applications (this manual). Make sure the circulator is properly sized for the system and friction loss.
7. Install an expansion tank on the system supply. Consult the expansion tank manufacturer's instruction manual (see Part 4, Section D for water volume) for specific information relating to expansion tank installation. Size the expansion tank for the required system volume and capacity.
8. Install an air elimination device on the system supply.
9. Install a drain valve at the lowest point of the system. Note:

The boiler cannot be drained completely of water without purging the unit with an air pressure of 15 PSI.

10. The relief valve and temperature and pressure gauge are included in the accessory kit. A discharge line should be installed 6" above the drain in the event of a pressure relief. The pipe size must be the same size as the relief valve outlet. **NEVER BLOCK THE OUTLET OF THE SAFETY RELIEF VALVE.**

J. Fill and Purge Heating System

1. Attach the hose to balance and purge hose connector or drain valve and run hose to nearest drain.
2. Close the other side of the balance and purge valve or shut off valve after the drain.
3. Open the first zone balance and purge or drain valve to let water flow out of the hose. If zone valves are used, open the valves one at a time manually. NOTE: You should check zone valve manufacturer's instructions prior to opening valves manually, so as not to damage the zone valve.
4. Manually operate fill valve regulator. When water runs out of the hose, you will see a steady stream without bubbles. Close the balance and purge valve or drain to stop the water from flowing. Disconnect the hose and connect it to next zone to be purged.
5. Repeat this procedure for additional zones (one at a time).

CAUTION

For installations that incorporate standing iron radiation and systems with manual vents at the high points, follow the previous section and, starting with the nearest manual air vent, open the vent until water flows out. Then close the vent. Repeat the procedure, working your way toward the furthest air vent. It may be necessary to install a basket strainer in an older system where larger amounts of sediment may be present. Annual cleaning of the strainer may be necessary.

Upon completion, make sure that the fill valve and zone valves are in automatic positions. You must also assure the purge and shut off valves are in open positions.

K. Glycol Antifreeze Solutions

⚠ WARNING

Use only inhibited propylene glycol solutions which are specially formulated for hydronic systems. Ethylene glycol is toxic and can attack gaskets and seals used in hydronic systems. Glycol mixtures should not exceed 50%. Failure to do so could result in property damage, severe personal injury, or death due to scalds.

- Glycol in hydronic applications should include inhibitors that prevent the glycol from attacking metallic system components. Make certain that the system fluid is checked for the correct glycol concentration and inhibitor level.
- The glycol solution should be tested at least once a year or as recommended by the glycol manufacturer.
- Anti-freeze solutions expand more than water. For example: A 50% by volume solution expands 4.8% in volume for a temperature increase from 32°F to 180°F, while water expands 3% over the same temperature rise. Allowances must be made in system design for expansion.
- A 30% mixture of glycol will result in a BTU output loss of 15% with a 5% increase in head against the system circulator.
- A 50% mixture of glycol will result in a BTU output loss of 30% with a 50% increase in head against the system circulator.

CAUTION

It is highly recommended that you carefully follow the glycol manufacturer's recommended concentrations, expansion requirements, and maintenance recommendations (pH additive breakdown, inhibitor reduction, etc.) You must carefully calculate the additional friction loss in the system as well as the reduction in heat transfer coefficients.

L. Zoning with Zone Valves

1. When zoning with zone valves, connect the boiler to the system as shown in Applications. The primary/secondary piping shown ensures the boiler loop will have sufficient flow. It also avoids applying the high head of the boiler circulator to the zone valves.
2. Connect DHW (domestic hot water) piping to indirect storage water heater as shown in Applications.

M. Zoning with Circulators

1. When using circulator zoning, connect the boiler to the system as shown in Applications. NOTE: The boiler circulator cannot be used for a zone. It must only supply the boiler loop.
2. Install a separate circulator for each zone.
3. Connect DHW (domestic hot water) piping to indirect storage water heater as shown in Applications.

N. Multiple Boilers

1. Connect multiple boilers as shown in Applications.
2. All piping shown is reverse return to assure balanced flow throughout the connected boilers.
3. Each connected boiler must have its own circulator pump to assure adequate flow.
4. Connect DHW (domestic hot water) piping to indirect storage water heater as shown in Applications.
5. The system flow (secondary loop) must be greater than the boiler's primary loop flow.

O. Applications*

CAUTION

Mixing valves are required for the protection of low temperature loops.

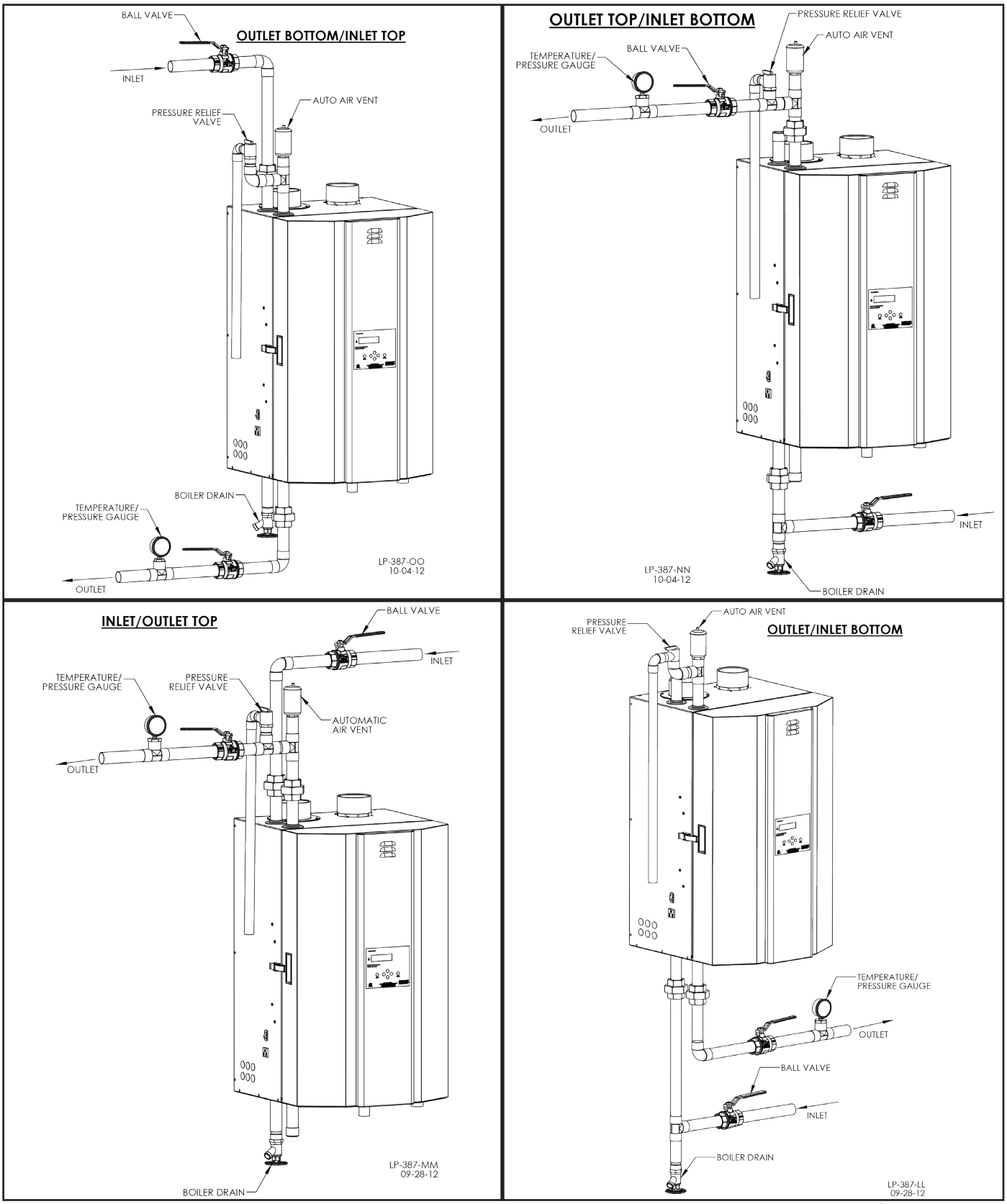

Figure 8 - Near Boiler Piping* - NOTE: This drawing is meant to show system piping concept only. Installer is responsible for all equipment and detailing required by local codes. *Top / Bottom Supply / Return Connections Available on 155 / 199 / 285 / and 399 Models ONLY.

NOTE: In piping applications utilizing a single zone, it is recommended that the installer use flow / check valves with weighted seats at or near the appliance to prevent gravity circulation.

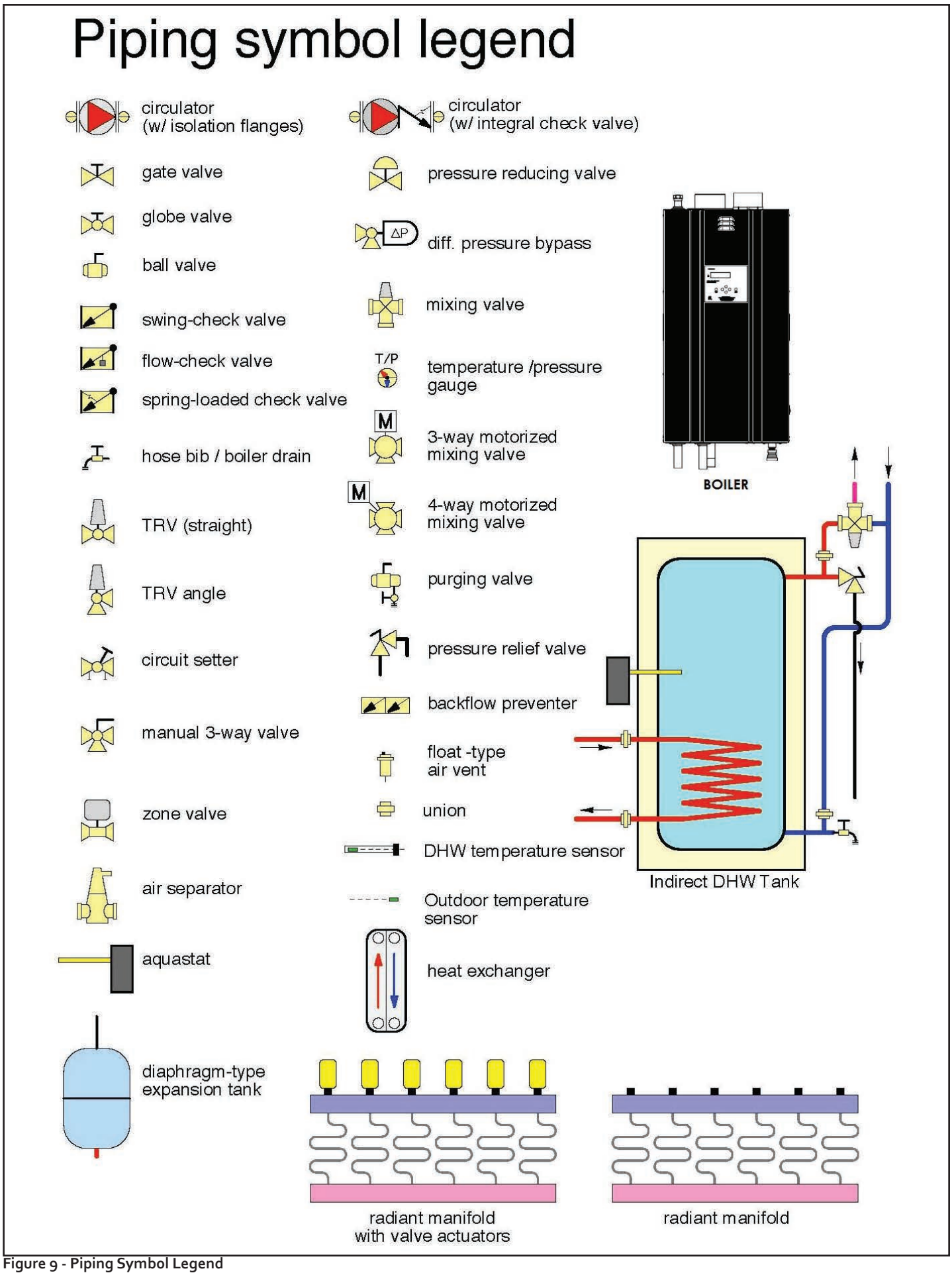

Figure 9 - Piping Symbol Legend

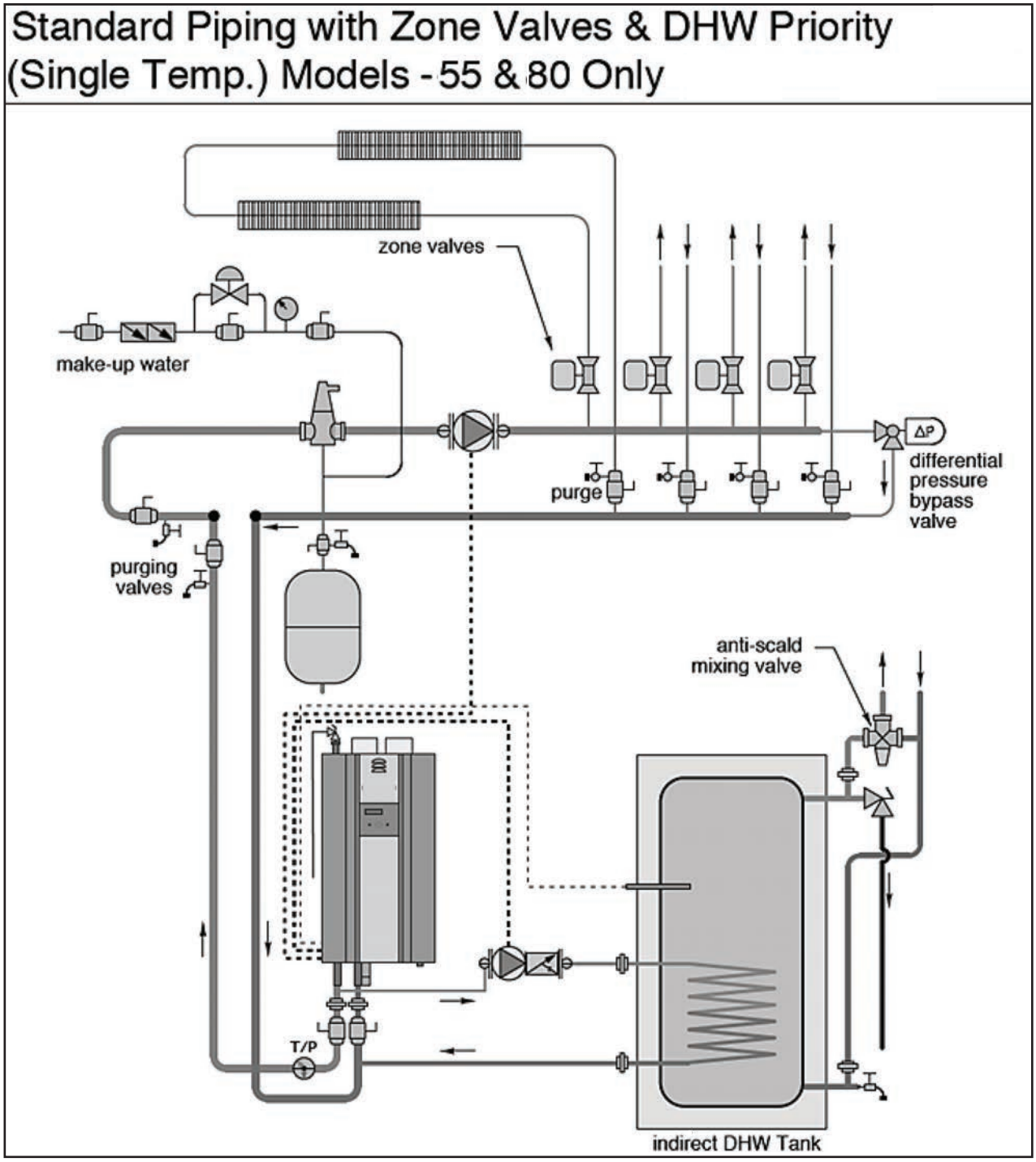

Figure 10 - Standard Piping with Zone Valves and Indirect Priority

NOTES:

1. This drawing is meant to show system piping concept only. Installer is responsible for all equipment and detailing required by local codes.
2. All closely spaced tees shall be within 4 pipe diameters center to center spacing.
3. A minimum of 6 pipe diameters of straight pipe shall be installed upstream and downstream of all closely spaced tees.
4. The minimum pipe size for connecting an indirect water heater is 1"
5. The minimum pipe size for connecting a 55 or 80 model boiler - 1".
6. Circulators are shown with isolation flanges. The alternative is standard flanges with full port ball valves. Purge valves can be used with circulator flanges as an alternative.
7. A mixing valve is recommended if the DHW temperature is set above the factory setting of 119°F.
8. Piping shown is Standard. VERY IMPORTANT: Minimum flow rates outlined in the manual must be maintained to minimize short cycling.
9. Install a minimum of 12 diameters of straight pipe upstream of all circulators.
10. VERY IMPORTANT – Minimum flow rates outlined in this manual must be maintained through the heat exchanger to minimize short cycling.

⚠ WARNING

The piping will not support the weight of the circulators. Refer to the circulator manufacturer's instructions to properly support the circulator. Failure to comply with these instructions could result in property damage, severe personal injury, or death.

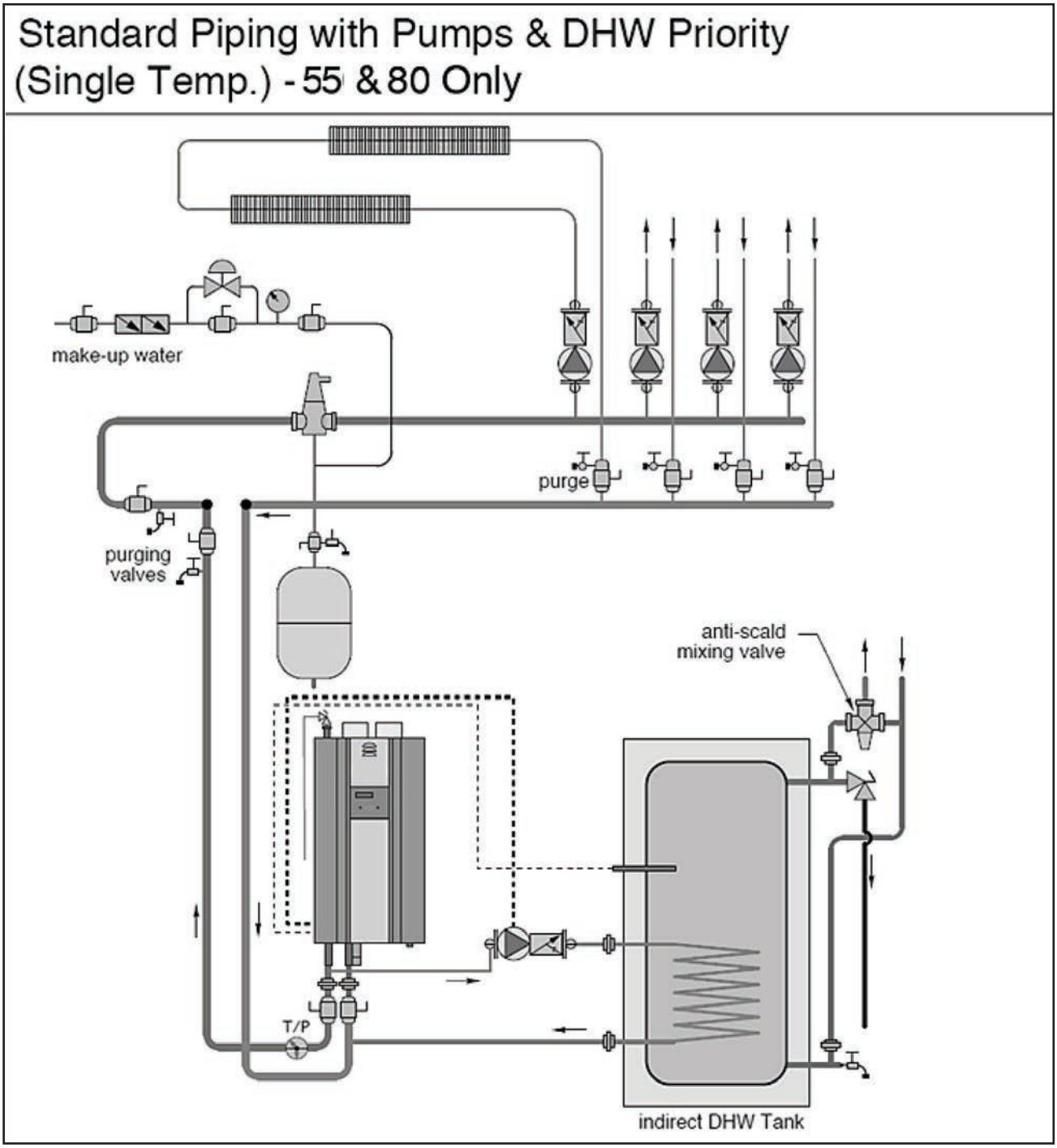

Figure 11 - Standard Piping with Pumps and Indirect Priority

NOTES:

1. This drawing is meant to show system piping concept only. Installer is responsible for all equipment and detailing required by local codes.
2. All closely spaced tees shall be within 4 pipe diameters center to center spacing.
3. A minimum of 6 pipe diameters of straight pipe shall be installed upstream and downstream of all closely spaced tees.
4. The minimum pipe size for connecting an indirect water heater is 1"
5. The minimum pipe size for connecting a 55 or 80 model boiler - 1".
6. Circulators are shown with isolation flanges. The alternative is standard flanges with full port ball valves. Purge valves can be used with circulator flanges as an alternative.
7. A mixing valve is recommended if the DHW temperature is set above the factory setting of 119°F.
8. Piping shown is Standard.
9. Install a minimum of 12 diameters of straight pipe upstream of all circulators.
10. VERY IMPORTANT – Minimum flow rates outlined in this manual must be maintained through the heat exchanger to minimize short cycling.

⚠ WARNING

The piping will not support the weight of the circulators. Refer to the circulator manufacturer's instructions to properly support the circulator. Failure to comply with these instructions could result in property damage, severe personal injury, or death.

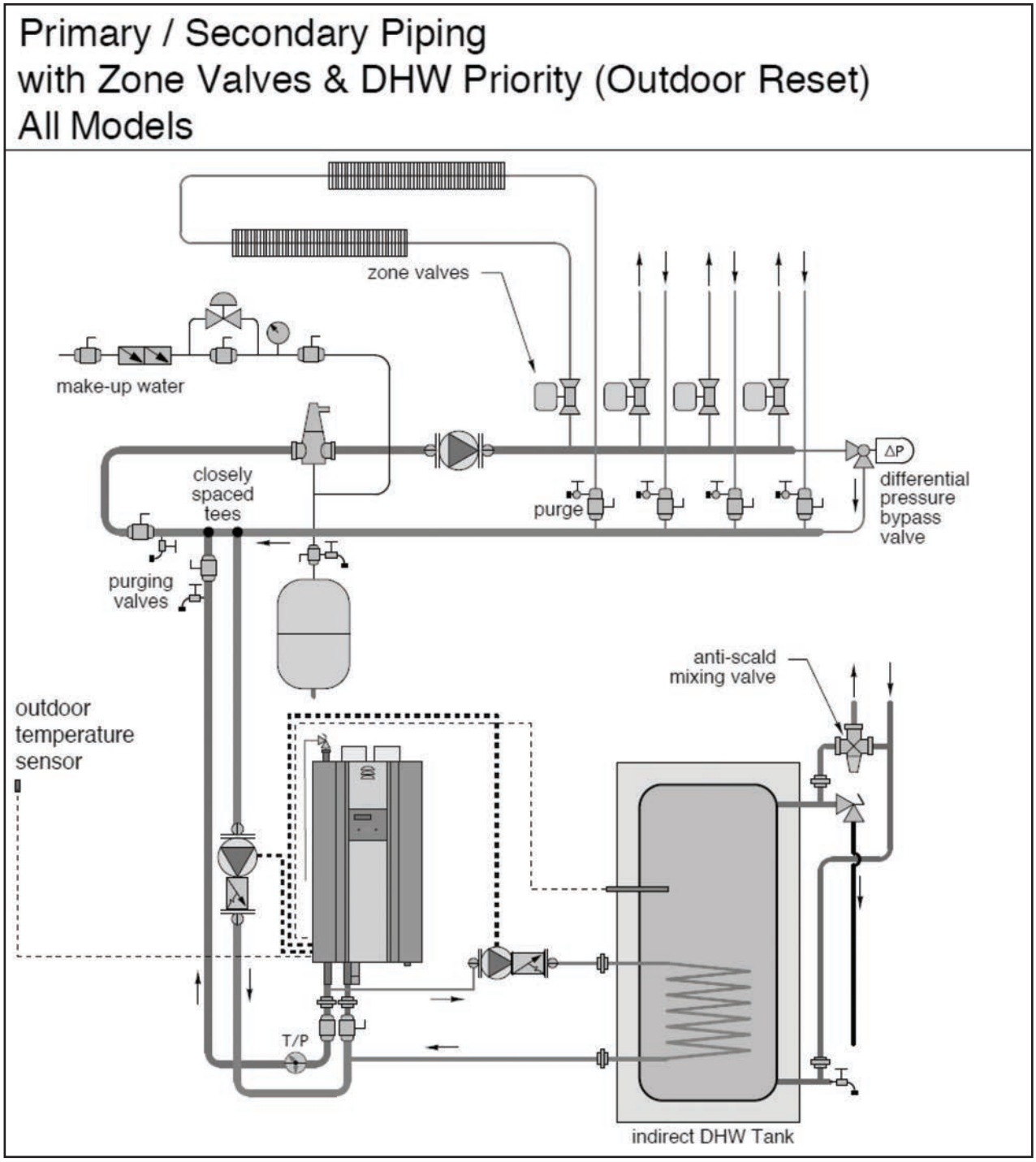

Figure 12 - Primary / Secondary Piping with Zone Valves and Indirect Priority

NOTES:

1. This drawing is meant to show system piping concept only. Installer is responsible for all equipment and detailing required by local codes.
2. All closely spaced tees shall be within 4 pipe diameters center to center spacing.
3. A minimum of 6 pipe diameters of straight pipe shall be installed upstream and downstream of all closely spaced tees.
4. The minimum pipe size for connecting an indirect water heater is 1"
5. The minimum pipe size for connecting a 55/80/110 - 1", 155/199/285 – 1.25", 399 – 1.5".
6. Circulators are shown with isolation flanges. The alternative is standard flanges with full port ball valves. Purge valves can be used with circulator flanges as an alternative.
7. A mixing valve is recommended if the DHW temperature is set above the factory setting of 119°F.
8. Piping shown is Primary/Secondary. System flow (secondary loop) must be greater than the boiler's primary loop flow.
9. Install a minimum of 12 diameters of straight pipe upstream of all circulators.
10. VERY IMPORTANT – Minimum flow rates outlined in this manual must be maintained through the heat exchanger to minimize short cycling.

⚠ WARNING

The piping will not support the weight of the circulators. Refer to the circulator manufacturer's instructions to properly support the circulator. Failure to comply with these instructions could result in property damage, severe personal injury, or death.

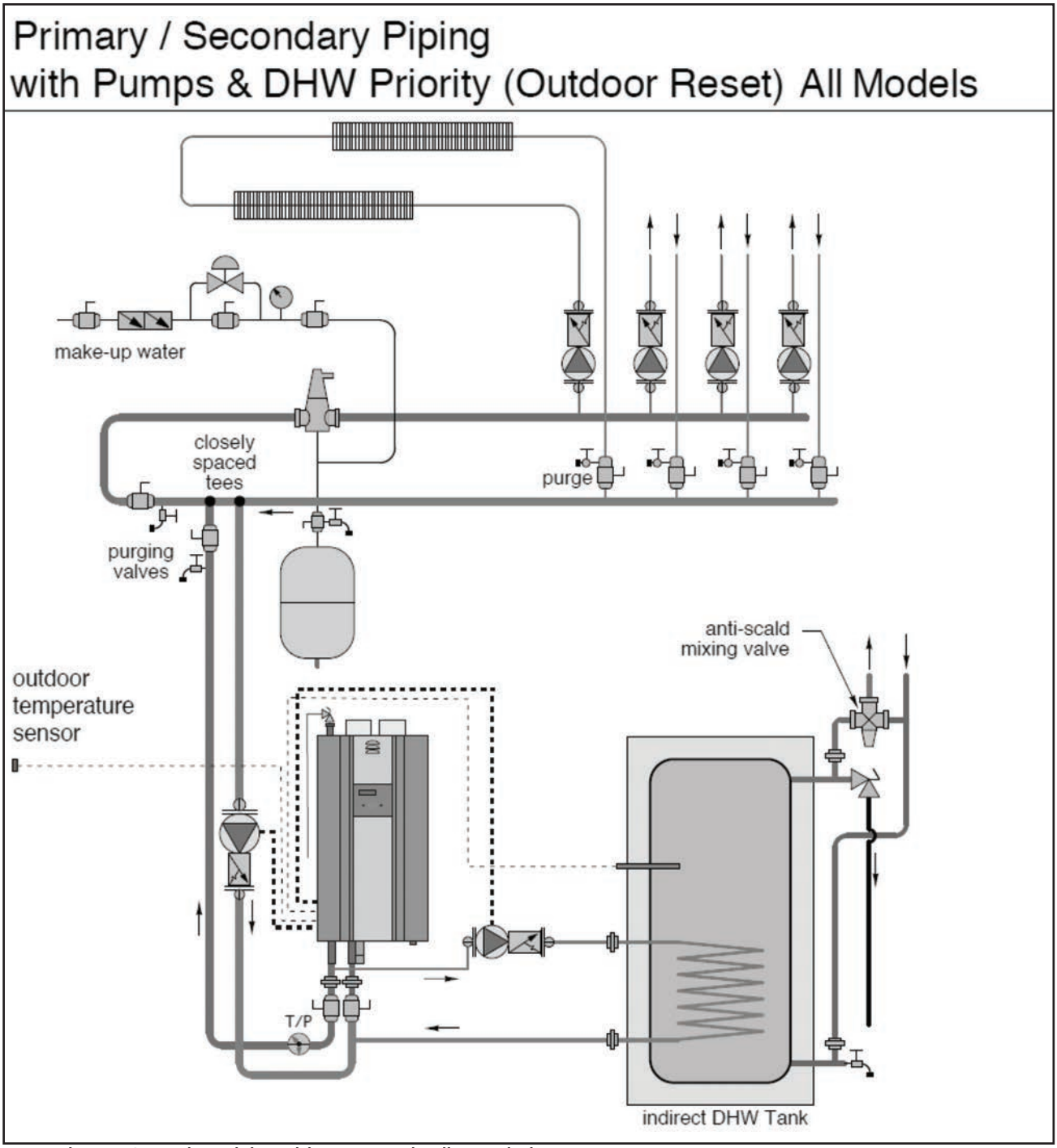

Figure 13 - Primary / Secondary Piping with Pumps and Indirect Priority

NOTES:

1. This drawing is meant to show system piping concept only. Installer is responsible for all equipment and detailing required by local codes.
2. All closely spaced tees shall be within 4 pipe diameters center to center spacing.
3. A minimum of 6 pipe diameters of straight pipe shall be installed upstream and downstream of all closely spaced tees.
4. The minimum pipe size for connecting an indirect water heater is 1"
5. The minimum pipe size for connecting a 55/80/110 - 1", 155/199/285 – 1.25", 399 – 1.5".
6. Circulators are shown with isolation flanges. The alternative is standard flanges with full port ball valves. Purge valves can be used with circulator flanges as an alternative.
7. A mixing valve is recommended if the DHW temperature is set above the factory setting of 119°F.
8. Piping shown is Primary/Secondary. System flow (secondary loop) must be greater than the boiler's primary loop flow.
9. Install a minimum of 12 diameters of straight pipe upstream of all circulators.
10. VERY IMPORTANT – Minimum flow rates outlined in this manual must be maintained through the heat exchanger to minimize short cycling.

⚠ WARNING

The piping will not support the weight of the circulators. Refer to the circulator manufacturer's instructions to properly support the circulator. Failure to comply with these instructions could result in property damage, severe personal injury, or death.

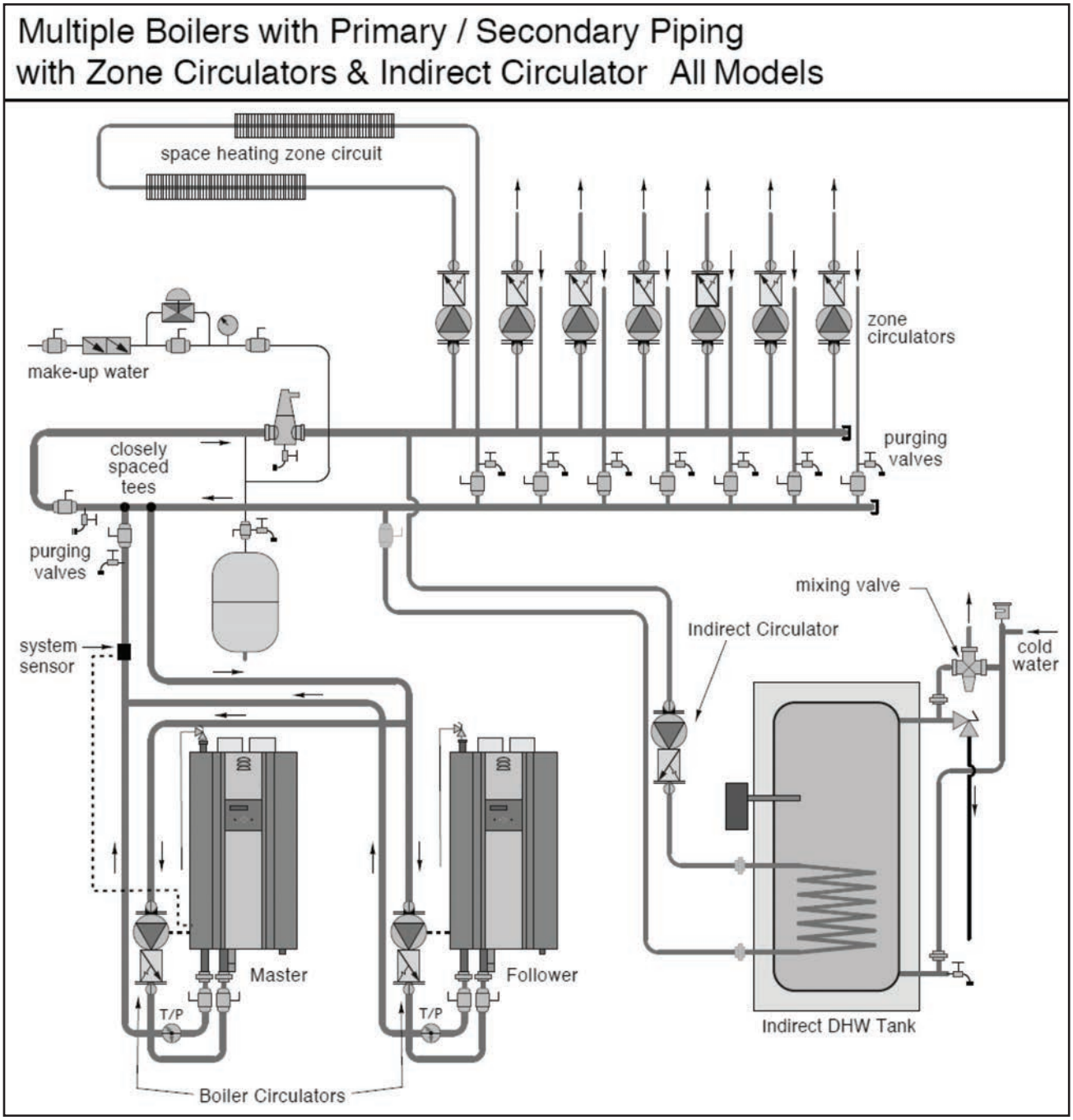

Figure 14 - Multiple Boilers - Primary / Secondary Piping with Pumps and Indirect Priority

NOTES:

1. This drawing is meant to show system piping concept only. Installer is responsible for all equipment and detailing required by local codes.
2. All closely spaced tees shall be within 4 pipe diameters center to center spacing.
3. A minimum of 6 pipe diameters of straight pipe shall be installed upstream and downstream of all closely spaced tees.
4. The minimum pipe size for connecting an indirect water heater is 1"
5. The minimum pipe size for connecting a 55/80/110 - 1", 155/199/285 – 1.25", 399 – 1.5".
6. Circulators are shown with isolation flanges. The alternative is standard flanges with full port ball valves. Purge valves can be used with circulator flanges as an alternative.
7. A mixing valve is recommended if the DHW temperature is set above the factory setting of 119°F.
8. Piping shown is Primary/Secondary. System flow (secondary loop) must be greater than the boiler's primary loop flow.
9. Install a minimum of 12 diameters of straight pipe upstream of all circulators.
10. VERY IMPORTANT – Minimum flow rates outlined in this manual must be maintained through the heat exchanger to minimize short cycling.

⚠ WARNING

The piping will not support the weight of the circulators. Refer to the circulator manufacturer's instructions to properly support the circulator. Failure to comply with these instructions could result in property damage, severe personal injury, or death.

Part 5 - Venting and Condensate Removal

DANGER

The boiler must be vented as detailed in this section. Ensure exhaust vent and intake piping complies with these instructions regarding vent system. Inspect finished exhaust vent and intake piping thoroughly to ensure all joints are well secured, airtight, and comply with all applicable code requirements, as well as the instructions provided in this manual. Failure to properly install the vent system will result in severe personal injury or death.

A. General

DANGER

This boiler is certified as a "Category IV" appliance and requires a special venting system. The vent system will operate with a positive pressure in the pipe. Exhaust gases must be piped directly outdoors using the vent materials and rules outlined in these instructions. Do not connect vent connectors serving appliances vented by natural draft into any portion of mechanical draft systems operating under positive pressure. Follow the venting instructions carefully. Failure to do so will result in substantial property damage, severe personal injury, or death.

1. Installation should be made in accordance with the regulations of the Authority Having Jurisdiction, local code authorities, and utility companies which pertain to this type of water heating equipment.
2. Install the venting system in accordance with these instructions and with the National Fuel Gas Code, ANSI Z223.1/ NFPA 54, CAN/CGA B149, and / or applicable provisions of local building codes.
3. This boiler must be vented with materials, components, and systems listed and approved for Category IV appliances.

DANGER

Exhaust and intake are to be piped separately. This boiler cannot share a common exhaust or intake with multiple appliances. Failure to follow these instructions will result in substantial property damage, severe personal injury, or death.

NOTE: To avoid contamination often contained in indoor air, it is best to pipe all intake combustion air directly to the outdoors.

NOTE: If exhaust vent pipe system passes through an unheated space such as an alcove or attic, the space must be heated or the pipe must be insulated. The insulation must have an R value sufficient to prevent freezing of the condensate.

WARNING

Improper seating of vent pipe gaskets can cause eventual gasket failure and exhaust gas leakage. Ensure the exhaust vent pipe is properly beveled and seated before insertion into the flue adapter. Failure to do so could result in property damage, severe personal injury, or death.

For closet and alcove installations: CPVC, polypropylene, or stainless steel venting material MUST BE USED. Failure to follow this statement could result in product damage, severe personal injury, or death.

WARNING

Breathing Hazard - Carbon Monoxide Gas

- Do not operate heater if flood damaged.
- Install vent system in accordance with local codes and manufacturers installation instructions.
- Do not obstruct heater air intake or exhaust. Support all vent piping per manufacturers installation instructions.
- Do not place chemical vapor emitting products near unit.
- According to NFPA 720, carbon monoxide detectors should be installed outside each sleeping area.
- Never operate the heater unless it is vented to the outdoors.
- Analyze the entire vent system to make sure that condensate will not become trapped in a section of vent pipe and therefore reduce the open cross sectional area of the vent.

LP-304-FR

Breathing carbon monoxide can cause brain damage or death. Always read and understand instruction manual.

DANGER

Due to the extreme flammability of most glues, cements, solvents, and primers used to join plastic exhaust vent and intake pipes, explosive solvent vapors must be cleared from all vent piping before start-up. Avoid using excess cement or primer, as this may pool in the vent pipes. Vent assemblies should be allowed to cure for a period of at least 8 hours before powering a connected appliance. Failure to follow these instructions will result in substantial property damage, severe personal injury, or death. It is the installers' responsibility to understand the hazards associated with explosive solvents and take the necessary precautions to avoid these risks.

WARNING

DO NOT insulate the first 3 feet of the exhaust vent. CPVC, Polypropylene, or Stainless Steel pipe material MUST be used for the first 3 feet of the vent run if the exhaust vent is insulated or passes through an enclosed space greater than 6", such as a wall. The balance of the vent run can be installed with standard Schedule 40 PVC pipe. Failure to comply with this warning could result in property damage, severe personal injury, or death.

Exhaust vent adaptors are not designed as load-bearing devices, and must not be used to support exhaust vent piping. All vent pipes must be properly connected, supported, and the exhaust vent must be pitched a minimum of 1/4" per foot back to the boiler to allow drainage of condensate. Failure to properly support vent piping and follow the information in this statement could result in product damage, severe personal injury, or death.

B. Approved Materials for Exhaust Vent and Intake Pipe

Item	Material	Standards for Installation In:	
		United States	Canada
Exhaust Vent or Intake Pipe and Fittings	PVC Schedule 40/80	ANSI / ASTM D1785	PVC, CPVC, and PP Venting Must be ULC-S636 Certified. IPEX is an approved manufacturer in Canada.
	PVC-DWV*	ANSI / ASTM D2665	
	CPVC Schedule 40/80	ANSI / ASTM F441	
	Polypropylene	UL-1738	
	Stainless Steel AL29-4C	Certified for Category IV and Direct Vent Appliance Venting	
Pipe Cement / Primer	PVC	ANSI / ASTM D2564	IPEX System 636 Cements and Primers
	CPVC	ANSI / ASTM F493	

⚠ DANGER

- The exhaust and intake components installed with this boiler must be used for near boiler piping BEFORE transitioning to the approved materials listed above. DO NOT REMOVE these installed components. Doing so WILL VOID boiler warranty.
- PVC / CPVC pipe and fittings of the same diameter are considered interchangeable.
- DO NOT use Foam Core Pipe in any portion of the exhaust piping from this boiler.
- DO NOT connect PVC / CPVC to PP without an approved vent connector.
- When installing AL29-4C vent piping, install a PVC-to-stainless adapter at the boiler vent connection, and at the termination when using a PVC termination kit. DO NOT mix AL29-4C piping from different manufacturers unless using adapters specifically designed for the purpose by the manufacturer.
- A double wall vent may be used when using stainless steel vent material in a freezing climate.
- *PVC-DWV may be used for air intake applications ONLY.
- Contact the venting material manufacturer if there is any question about the applicability of the proposed venting material.

Failure to follow these directions will result in substantial property damage, severe personal injury, or death.

Table 8 - Approved Materials for Exhaust Vent and Intake Pipe

⚠ WARNING

DO NOT mix components from different venting systems without proper adapters. The vent system could fail, causing leakage of flue products into the living space. Use only the approved pipe and fitting materials, and primer and cement specifically designed for the material used, as listed in the above table. Failure to do so could result in property damage, serious injury, or death.

CAUTION

High heat sources (generating heat 100ºF / 37ºC or greater, such as boiler flue pipes, space heaters, etc.) may damage plastic components of the boiler as well as plastic vent pipe materials. Such damages ARE NOT covered by warranty. It is recommended to keep a minimum clearance of 8" from high heat sources. Observe heat source manufacturer instructions, as well as local, state, provincial, and national codes, laws, regulations, and ordinances when installing this boiler and related components near high heat sources.

NOTE: The use of double-wall vent or insulated material for the combustion air intake pipe is recommended in cold climates to prevent the condensation of airborne moisture in the incoming combustion air.

⚠ DANGER

You must not use "B" vent in an exhaust application. "B" vent is for intake applications ONLY. Using "B" vent in an exhaust application will result in serious injury or death.

C. Additional Requirements for Installation in Canada

1. Installations must be made with a vent pipe system certified to ULC-S636. IPEX is an approved vent manufacturer in Canada supplying vent material listed to ULC-S636. Additionally, you may use AL29-4C stainless steel venting to comply with Canadian requirements.
2. The first three (3) feet of vent pipe from the boiler flue outlet must be readily accessible for visual inspection.
3. The components of the certified vent system must not be interchanged with other vent systems or unlisted pipe / fittings.

Cellular foam core piping may be used on air inlet piping **only**.

D. Exhaust Vent and Intake Pipe Location

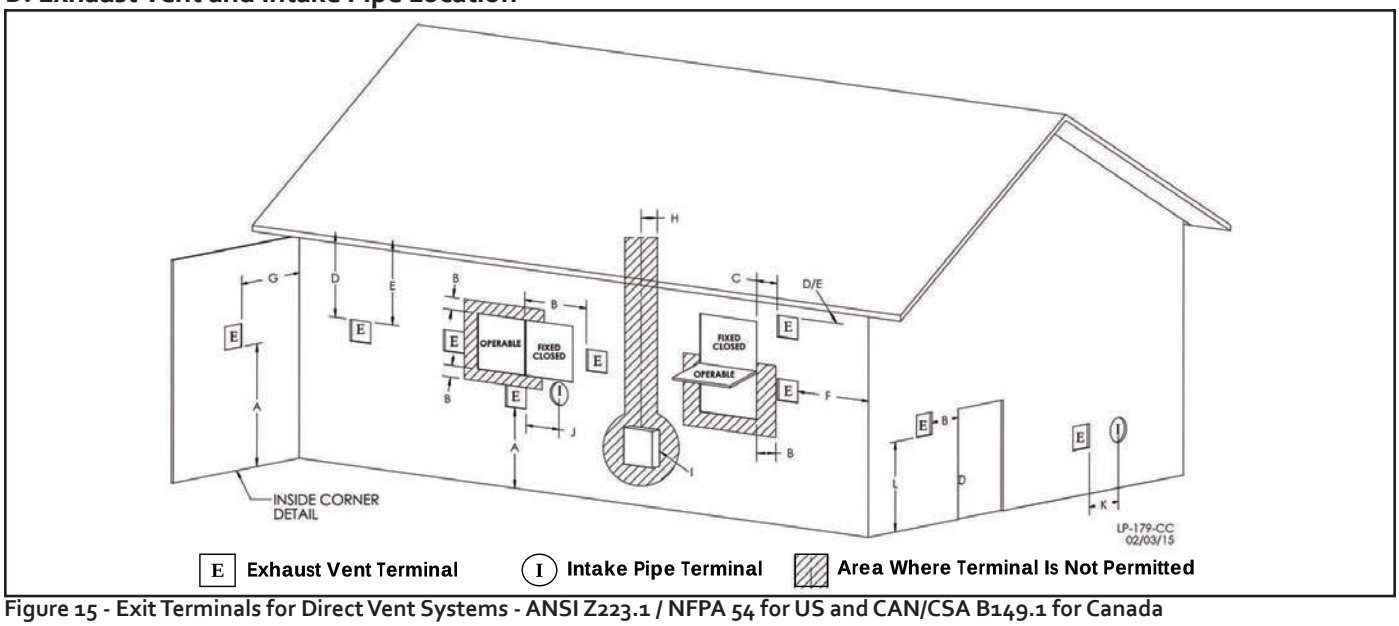

Figure 15 - Exit Terminals for Direct Vent Systems - ANSI Z223.1 / NFPA 54 for US and CAN/CSA B149.1 for Canada

DETERMINE EXHAUST VENT AND INTAKE PIPE LOCATION – NOTES:

INSTALLATIONS IN THE UNITED STATES

A. Provide a minimum of 1 foot clearance from the bottom of the exhaust vent and intake pipe above the expected snow accumulation level. Snow removal may be necessary to maintain clearance.

B. Provide a minimum of 1 foot distance from exhaust vent termination to any door, operable window, or gravity intake into any building.

C. Provide a minimum of 1 foot distance from exhaust vent termination to any permanently closed door or window.

D. Provide a minimum of 4 feet vertical clearance from the exhaust vent to all roof overhangs.

E. Locating exhaust vent termination near roof overhangs will result in the formation of icicles in freezing weather, and could result in blockage of the exhaust vent. To prevent icicles from forming, maintain 4 feet vertical clearance from the exhaust vent to all roof overhangs.

F. Provide 4 feet clearance from the outside corner of vertical walls, chimneys, etc., as well as horizontal corners created by roof overhangs.

G. Provide 6 feet clearance from the inside corner of vertical walls, chimneys, etc., as well as horizontal corners created by roof overhangs.

H. Provide 4 feet clearance from center line within a height of 15 feet above electrical meters, gas meters, gas regulators, relief equipment, exhaust fans and inlets.

I. Provide 4 feet horizontal clearance from electrical meters, gas meters, gas regulators, relief equipment, exhaust fans and inlets. In no case shall the exit terminal be above or below the aforementioned equipment unless the 4 foot horizontal distance is maintained.

J. This boiler vent system shall terminate at least 3 feet (0.9 m) above any forced air intake located within 10 ft (3 m).

NOTE: This does not apply to the combustion air intake of a direct-vent appliance.

K. When venting with a two pipe system, maximum distance between exhaust vent and intake pipe is 6 feet (1.8 m). Minimum distance between exhaust vent and intake pipe on single direct vented appliance is 10" (0.255 m) center-to-center. Minimum distance between exhaust vents and intake pipes on multiple boilers is 10" (0.255 m) center-to-center.

L. When adjacent to a public walkway, locate exit terminal at least 7 feet above grade.

In addition:

- Total length of vent piping shall not exceed the limits specified in this manual.
- The vent piping for this direct vented appliance is approved for zero clearance to combustible construction.
- The flue products coming from the exhaust vent will create a large plume when the boiler is in operation. Avoid venting in areas that will affect neighboring buildings or be considered objectionable.
- DO NOT locate exhaust vent or intake pipe in a parking area where machinery may damage the pipe.
- DO NOT locate the exhaust vent or intake pipe terminals under a porch, balcony, or veranda.
- Avoid terminating exhaust vents near shrubs, air conditioners, or other objects that will obstruct the exhaust stream.
- DO NOT vent over a public walkway. Condensate could drip or freeze and create a nuisance or hazard.
- **NOTE:** Due to potential moisture build-up, sidewall venting may not be the preferred venting option. Carefully consider venting installation and location to save time and cost.

INSTALLATIONS IN CANADA

NOTE: Canadian installation must comply with the CAN/CSA B149.1 code and applicable local codes and supersede the restrictions for the United States outlined in this section.

⚠ WARNING

It is required to insert exhaust and intake screens into the vent terminations to prevent blockage caused by debris or birds. Failure to keep terminations clear could result in property damage, severe personal injury, or death.

The building owner is responsible for keeping the exhaust and intake terminations free of snow, ice, or other potential blockages, as well as scheduling routing maintenance. Failure to keep the vent piping terminations clear and properly maintain the boiler could result in property damage, severe personal injury, or death.

For each floor containing bedroom(s), a carbon monoxide detector and alarm shall be placed in the living area outside the bedrooms, as well as in the room that houses the boiler. Detectors and alarms shall comply with NFPA 720 (latest edition). Failure to comply with these requirements could result in property damage, severe personal injury, or death.

E. Exhaust Vent and Intake Pipe Sizing

1. The exhaust vent and intake pipe size is 3" for 55 - 285 models and 4" for the 399 model.
2. The maximum total equivalent length of exhaust vent and intake pipe **should not exceed 200 feet for all models EXCEPT the 285 model. Total equivalent length for the 285 model should not exceed 150 feet.**

a. The equivalent length of elbows, tees, and other fittings are listed in the Friction Loss Table.

Friction Loss Equivalent in Piping and Fittings			
Fittings or Piping	Equivalent Feet		
	3"	4"	6"
90 Degree Elbow*	5'	3'	3'
45 Degree Elbow	3'	3'	2'
Coupling	0'	0'	0'
Air Inlet Tee	0'	0'	0'
Straight Pipe	1'	1'	1'
Concentric Kit	3'	N/A	N/A
V Series Vent Kit	1'	1'	1'
AL20 4c Vent Terminal	1'	1'	1'

Table 9 - *Friction loss for long radius elbow is 1 foot less. NOTE: Consult Polypropylene venting instructions for friction loss and pressure drop equivalents.

b. For example: If the exhaust vent is 3" in diameter, has two 90° elbows, and 10 feet of PVC pipe we will calculate:
Exhaust Vent Equivalent Length = (2x5) + 10 = 20 feet.
Further, if the 3" intake pipe has two 90° elbows, one 45° elbow, and 10 feet of PVC pipe, the following calculation applies:
Intake Pipe Equivalent Length = (2x5) + 3 + 10 = 23 feet.
The total equivalent length is 43 feet, well below the maximum.

c. Effort should be made to keep a minimum difference in equivalent length between the exhaust vent and intake pipe.

3. The minimum total equivalent length is 16 feet.

CAUTION

Do not exceed the maximum lengths for vent pipes. Excessive length could result in boiler shutdown and property damage.

Failure to provide a minimum total vent length of 16 equivalent feet could result in property damage and improper product operation.

F. Longer Vent Runs

The maximum total equivalent length can be extended by increasing the diameter of both the exhaust vent and intake pipes equally. However, the transitions should begin a minimum of 16 equivalent feet from the boiler. Transitions should always be made in vertical sections of pipe to prevent the condensate from pooling in the vent pipe.

On all models EXCEPT the 285 model, the maximum equivalent length for increased diameter vent pipes is 275 ft, which includes 16 ft from with boiler with a transition total of 259 ft upsize piping for longer vent runs. On the 285 model, the maximum equivalent length for increased diameter vent pipes is 250 ft., which includes the 16 ft from the boiler with a transition total of 234 ft upsize piping for longer vent runs.

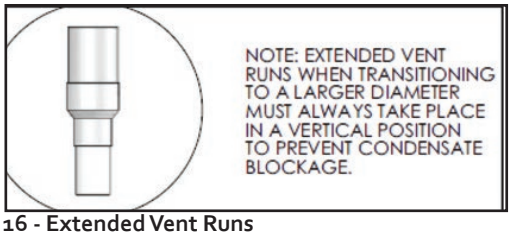

Figure 16 - Extended Vent Runs

Standard Vent Connection	Reducing Coupling	Increased Vent Size
3"	4" x 3"	4"
4"	6" x 4"	6"
6"	8" x 6"	8"

Table 10 - Vent Run Transition

DANGER

Total maximum equivalent length of increased diameter exhaust vent and intake pipe must not exceed the lengths defined in this manual. Failure to keep the total equivalent length below the maximum lengths determined in this manual will result in faulty boiler operation, substantial property damage, serious personal injury, or death.

G. Exhaust Vent and Intake Pipe Installation

WARNING

All joints of positive pressure vent systems must be sealed completely to prevent leakage of flue products into the living space. Failure to do so could result in property damage, serious injury, or death.

1. Use only solid PVC, CPVC, or stainless steel pipe or a Polypropylene vent system approved for use with Category IV appliances.
FOAM CORE PIPING IS NOT APPROVED FOR EXHAUST VENT APPLICATIONS. Foam core piping may be used on air inlet piping **only**.
2. Remove all burrs and debris from joints and fittings.
3. When using PVC or CPVC pipe, all joints must be properly cleaned, primed, and cemented. Use only cement and primer approved for use with the pipe material. Cement must conform to ASTM D2564 for PVC and ASTM F493 for CPVC pipe. **NOTE: DO NOT CEMENT POLYPROPYLENE PIPE.**
4. Ensure the vent is located where it will not be exposed to prevailing winds.
5. In all roof venting applications, exhaust discharge must point away from the pitch of the roof.
6. If the exhaust vent is to be terminated in a walled off area (such as a roof with a parapet wall), ensure the exhaust vent terminates a minimum of 10' from nearest wall and extends level with or above the top of the wall. This will ensure flue gas does does not get trapped and possibly recirculated into the intake air pipe, which could contaminate the combustion air.
7. To prevent water leakage, install adequate roof flashing where the pipe enters the roof.
8. Do not locate vent over public walkways, driveways, or parking lots. Condensate could drip and freeze, resulting in a slip hazard or damage to vehicles and machinery.
9. Due to potential moisture build-up, sidewall venting may not be the preferred venting option. To save time and cost, carefully consider venting installation and location.

10. Horizontal lengths of exhaust vent must slope back towards the boiler not less than ¼" per foot to allow condensate to drain from the vent pipe.
11. The exhaust vent must terminate where vapors cannot make accidental contact with people or pets, or damage shrubs or plants.
12. In vacant chimney applications, install and seal a rain cap over existing chimney openings.
13. All piping must be fully supported. Use pipe hangers at a minimum of 4 foot intervals to prevent sagging of the pipe where condensate may form.
14. Do not use the boiler to support any piping.
15. Ensure the outdoor exhaust vent termination is screened to prevent blockage caused by debris or birds.
16. Ensure the outdoor intake pipe termination is screened to prevent blockage caused by debris or birds.

The following table lists optional exhaust/intake terminations available from HTP:

Description	Stock Code
3" PVC Concentric Termination Kit	KGAVT0601CVT
3" Stainless Steel Termination Kit	V1000
4" Stainless Steel Termination Kit	V2000
6" Stainless Steel Termination Kit	V3000
3" Polypro Vent Kit	8400P-001

Table 11 - Optional Vent Kits

H. Applications

1. Direct Vent Installation of Exhaust and Intake

If installing a direct vent option, combustion air must be drawn from the outdoors directly into the boiler intake, and exhaust must terminate outside. There are three basic direct vent options detailed in this manual: 1. Side Wall Venting, 2. Roof Venting, and 3. Unbalanced Venting.

Be sure to locate the boiler such that the exhaust vent and intake pipe can be routed through the building and properly terminated. Different vent terminals can be used to simplify and eliminate multiple penetrations in the building structure (see Optional Equipment in Venting Section). The exhaust vent and intake pipe lengths, routing and termination methods must all comply with the methods and limits given in the Venting section of this manual.

When installing a combustion air intake from outdoors, care must be taken to utilize uncontaminated combustion air. **NOTE:** To prevent combustion air contamination, see Table 2.

⚠ WARNING

Take extra precaution to adequately support the weight of vent pipes terminating through the roof. Failure to properly support roof terminated piping could result in property damage, serious injury, or death.

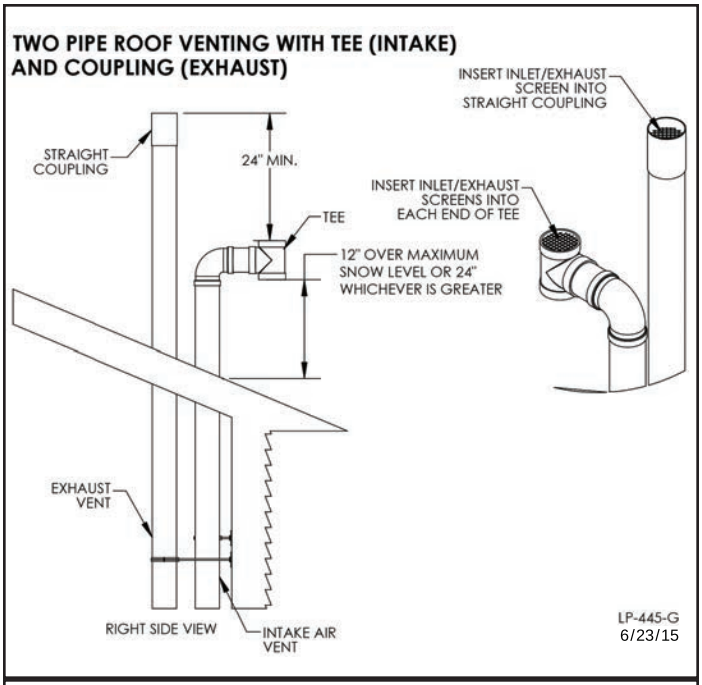

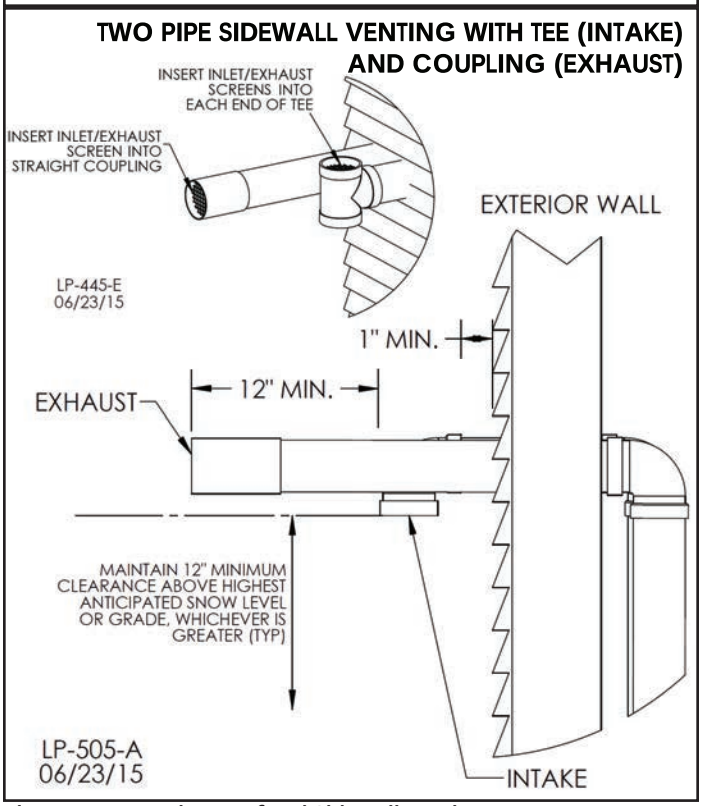

Figure 17 - Two Pipe Roof and Sidewall Venting

NOTE: These drawings are meant to demonstrate system venting only. The installer is responsible for all equipment and detailing required by local codes.

⚠ WARNING

All vent pipes must be glued, properly supported, and the exhaust pitched a minimum of 1/4" per foot back to the boiler to allow drainage of condensate. When placing support brackets on vent piping, the first bracket must be within 1 foot of the boiler and the balance of 4 foot intervals on the vent pipe. Venting must be readily accessible for visual inspection from the first three feet from the boiler.

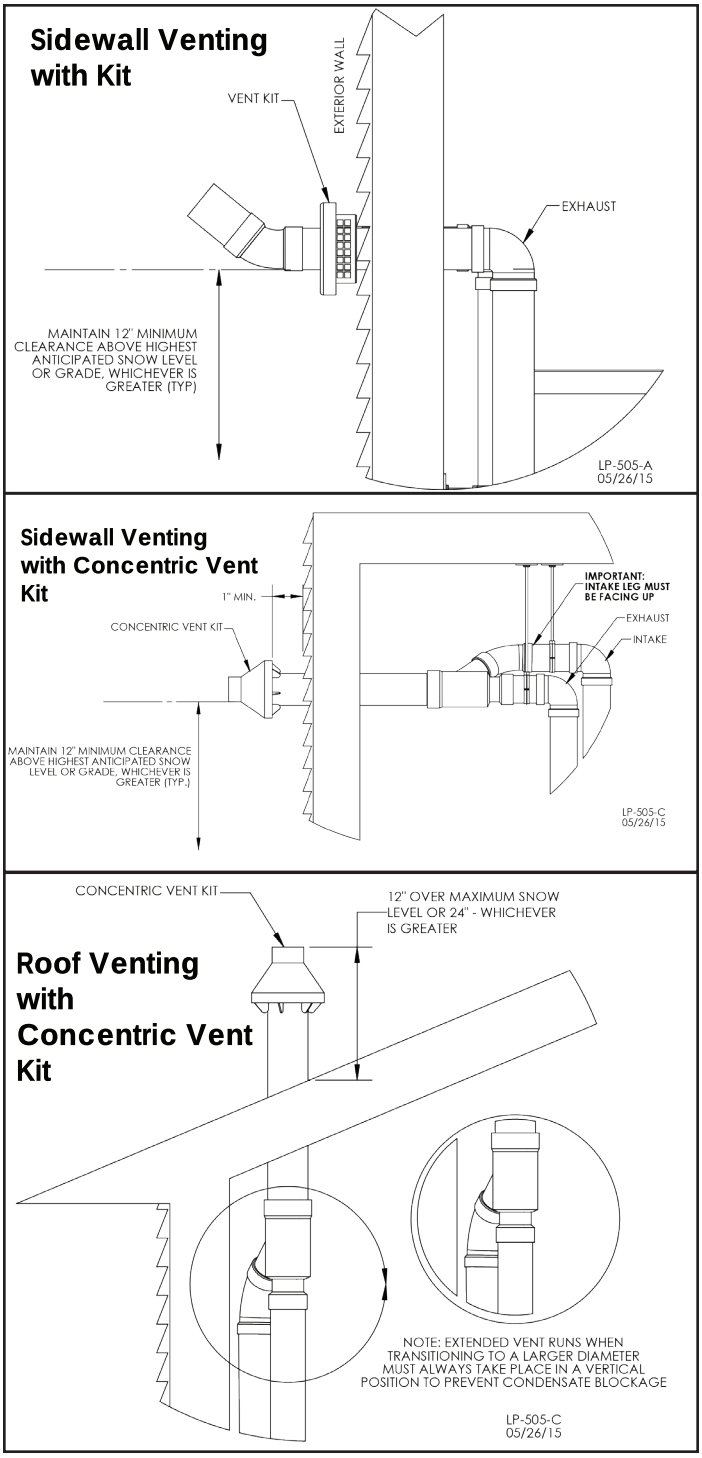

Figure 18 - Venting with Optional Kits (NOT INCLUDED WITH THE BOILER)

NOTE: These drawings are meant to demonstrate system venting only. The installer is responsible for all equipment and detailing required by local codes.

WARNING

All vent pipes must be glued, properly supported, and the exhaust pitched a minimum of 1/4" per foot back to the boiler to allow drainage of condensate. When placing support brackets on vent piping, the first bracket must be within 1 foot of the boiler and the balance of 4 foot intervals on the vent pipe. Venting must be readily accessible for visual inspection from the first three feet from the boiler.

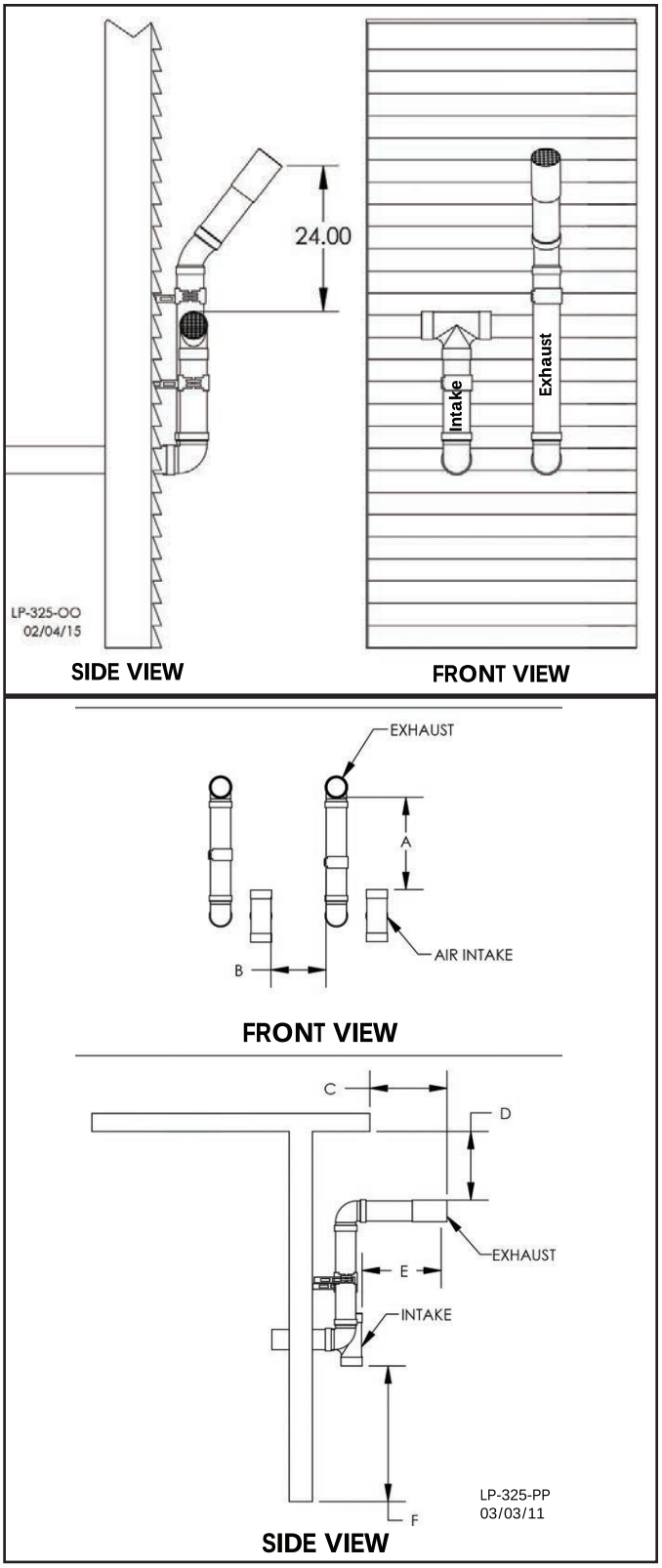

Figure 19 - Horizontal (Snorkel) Venting

NOTES:

A. For every 1" of overhang, the exhaust vent must be located 1" vertical below overhang (overhang means top of building structure and not two adjacent walls [corner of building]).

B. Typical installations require 12" minimum separation between bottom of exhaust outlet and top of air intake.

C. Maintain 12" minimum clearance above highest anticipated snow level or grade (whichever is greater).

D. Minimum 12" between vents when installing multiple vents.

E. 12" minimum beyond air intake.

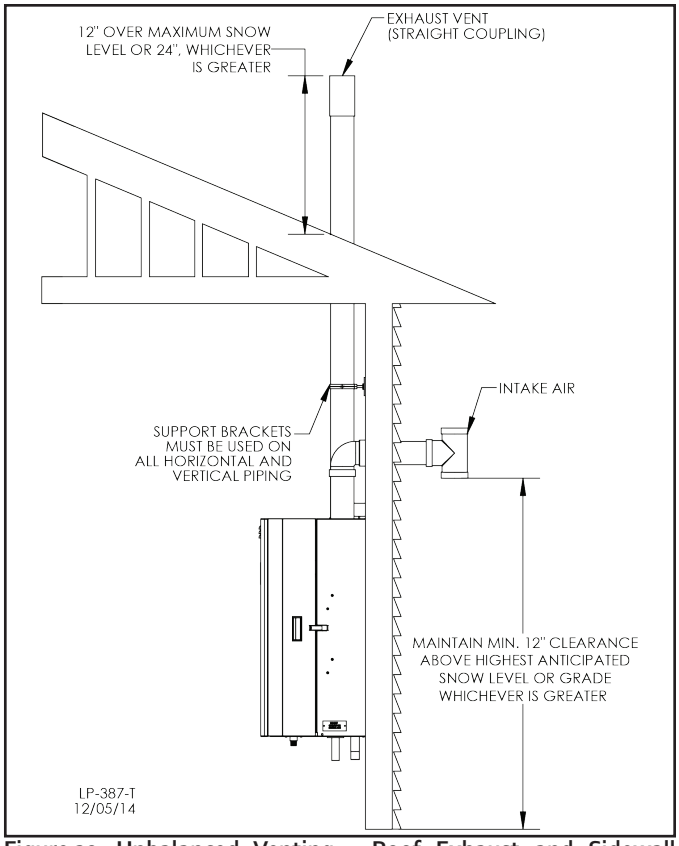

Figure 20 - Unbalanced Venting - Roof Exhaust and Sidewall Intake

NOTE: These drawings are meant to demonstrate system venting only. The installer is responsible for all equipment and detailing required by local codes.

WARNING

All vent pipes must be glued, properly supported, and the exhaust pitched a minimum of 1/4" per foot back to the boiler to allow drainage of condensate. When placing support brackets on vent piping, the first bracket must be within 1 foot of the boiler and the balance of 4 foot intervals on the vent pipe. Venting must be readily accessible for visual inspection from the first three feet from the boiler.

An unbalanced vent system can be installed ONLY when the exhaust is in the vertical position. Failure to do so could result in serious personal injury or death.

2. Venting Through an Existing System

This boiler may be vented through an existing unused vent system. The inner diameter of the existing vent system is utilized for the combustion air source. Two methods have been approved for such venting: Concentric Venting Through an Existing System and Venting as a Chase.

Vent / Air Intake Size	Minimum Existing Vent / Chase Size
3"	5"
4"	7"

Table 12 - Minimum Existing Vent / Chase Sizing

DANGER

Do not install the boiler into a common existing vent with any other appliance. This will cause flue gas spillage or boiler malfunction, resulting in substantial property damage, serious personal injury, or death.

CAUTION

Contractors must check state and local codes before installing through an existing vent opening. State and local codes always take precedence over manufacturer's instructions. Failure to check state and local codes before installing through an existing opening could result in property damage and add significantly to installation costs.

If an existing venting system is converted for use with this boiler, the installer must ensure that the existing venting system is clean and free from particulate contamination that could damage the boiler. Failure to do so could result in property damage and boiler failure. Such failure IS NOT covered under warranty.

Concentric Venting Through an Existing System

NOTE: The following instructions refer only to venting through an existing vent system, and not to venting with HTP's optional concentric vent kits. Refer to Concentric Vent Kit installation manual (LP-166) for further information on venting with the optional concentric vent kits.

Concentric venting through an existing system must run vertically through the roof. See Table 12 for proper minimum vent sizing. Use only the approved venting materials specified in Table 8 for piping the system. All instructions listed in this Venting section apply. See Figures 21-1 and 21-2 for venting demonstrations.

DANGER

The upper and lower vent terminations as well as all joints in the venting system must be properly sealed to ensure that all combustion air is drawn properly and exhaust does not leak from the system. Failure to properly seal the venting system will result in property damage, serious personal injury, or death.

Chase Venting Through an Existing System

When venting as a chase, follow all instructions included in this Venting section, including those in the previous Concentric Venting Through an Existing System section. See Figure 21-3 for chase venting demonstration.

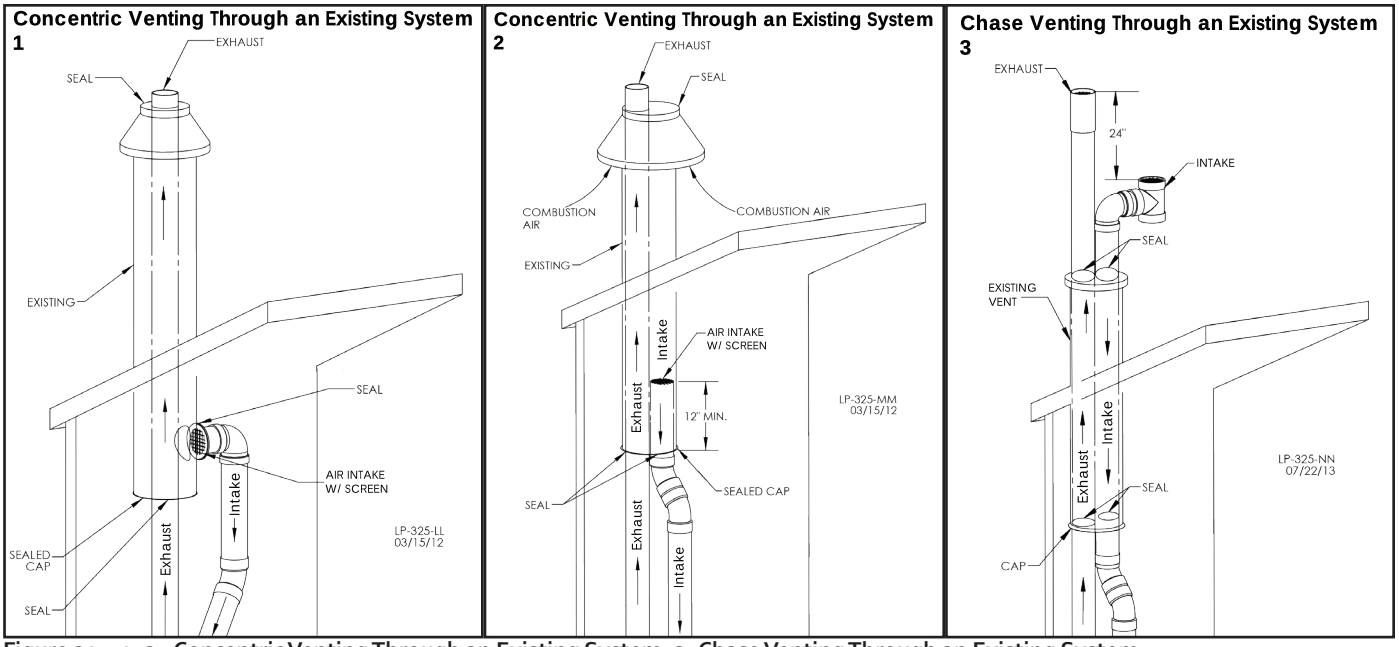

Figure 21 - 1, 2 - Concentric Venting Through an Existing System, 3, Chase Venting Through an Existing System

NOTE: These drawings are meant to demonstrate system venting only. The installer is responsible for all equipment and detailing required by local codes.

3. Indoor Combustion Air in Confined or Unconfined Space

This boiler requires fresh, uncontaminated air for safe operation and must be installed in a mechanical room where there is adequate combustion and ventilating air. **NOTE: To prevent combustion air contamination, see Table 2.**

Combustion air from the indoor space can be used if the space has adequate area or when air is provided through a duct or louver to supply sufficient combustion air based on the boiler input. **Never obstruct the supply of combustion air to the boiler.** If the boiler is installed in areas where indoor air is contaminated (see Figure 22) it is imperative that the boiler be installed as direct vent so that all combustion air is taken directly from the outdoors into the boiler intake connection.

Unconfined space is space with volume greater than 50 cubic feet per 1,000 Btu/hour (4.8 cubic meters per kW) of the total input rating of all fuel-burning appliances installed in that space. Rooms connected directly to this space, through openings not furnished with doors, are considered part of the space.

Confined space is space with volume less than 50 cubic feet per 1,000 Btu/hour (4.8 cubic meters per kW) of the total input rating of all fuel-burning appliances installed in that space. Rooms connected directly to this space, through openings not furnished with doors, are considered part of the space.

When drawing combustion air from inside a conventionally constructed building to a confined space, such space should be provided with two permanent openings: one located 6" (15 cm) below the space ceiling, the other 6" (15cm) above the space floor. Each opening should have a free area of one square inch per 1,000 Btu/hr (22cm2/kW) of the total input of all appliances in the space, but not less than 100 square inches (645cm2).

If the confined space is within a building of tight construction, air for combustion must be obtained from the outdoors as outlined in the Venting section of this manual. See Figure 23.

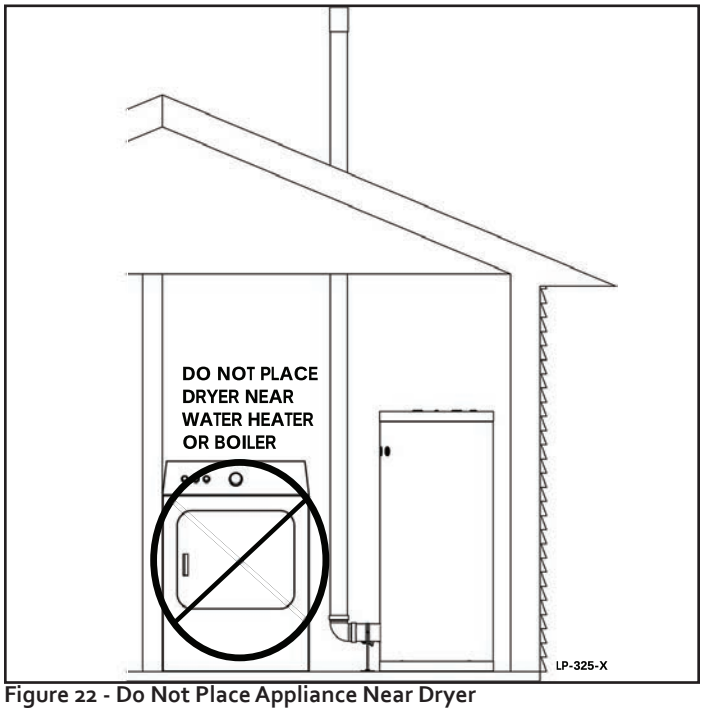

Figure 22 - Do Not Place Appliance Near Dryer

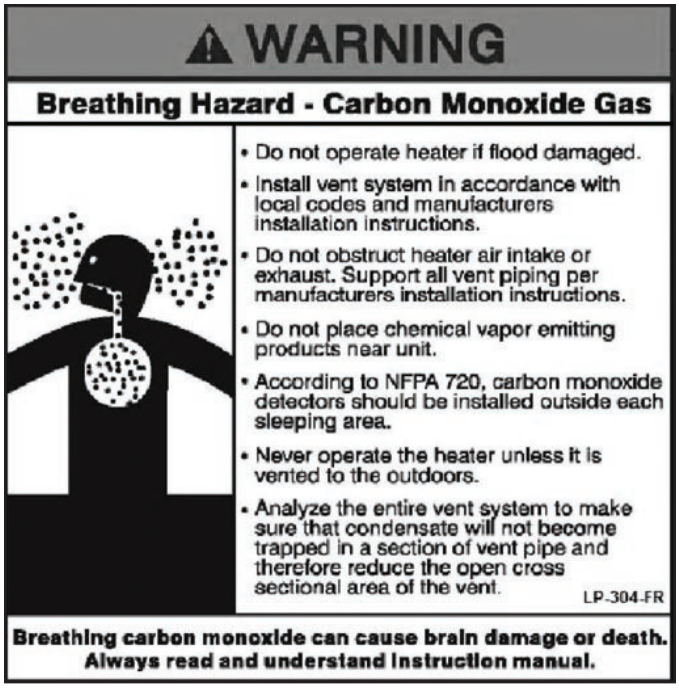

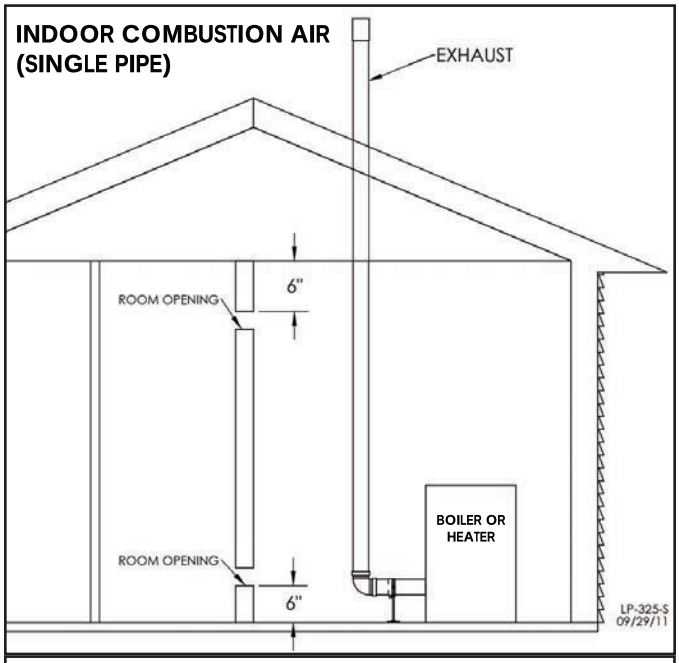

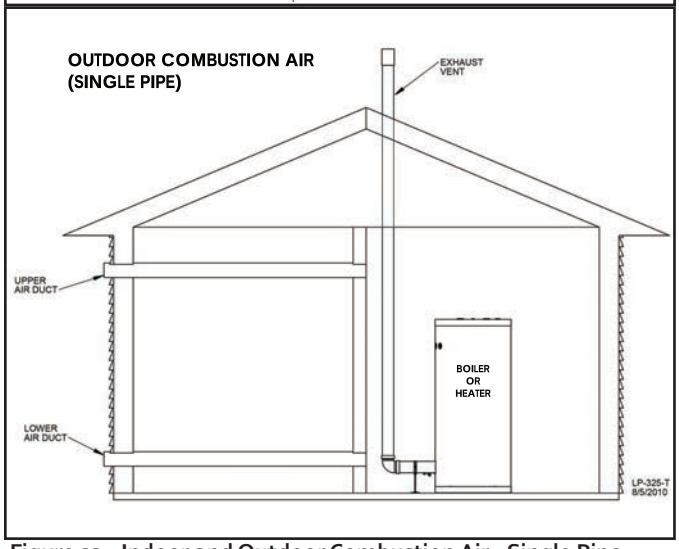

Figure 23 - Indoor and Outdoor Combustion Air - Single Pipe

I. Condensate Removal System

NOTE: Check with your local gas company to determine if combustion condensate disposal is permitted in your area. In the state of Massachusetts, condensate must be neutralized before entering a drain.

This boiler is a high efficiency appliance, and therefore produces condensate: a by-product of the combustion process. A condensate collection system with an internal float switch monitors condensate level to prevent it from backing up into the combustion system. There is a flexible line that must be piped to a drain or condensate pump.

Condensate from the boiler is slightly acidic with a pH of 3.2 - 4.5. To avoid long term damage to the drainage system and to meet local code requirements, HTP recommends neutralizing condensate with a Condensate Neutralizer Kit (Part # 7450P-212 for EL-80/110/150/220/299/301, Part # 7350P-611 for EL-399). The neutralizer kit connects to the drain system and contains limestone chips that neutralize the pH level of the condensate. The neutralizer kit should be checked annually and the limestone chips replenished if necessary. When replacing the limestone chips, take care to ensure chips are no smaller than ½" to avoid blockage in condensate piping (refer to Figure 26 for piping of the condensate neutralizer.)

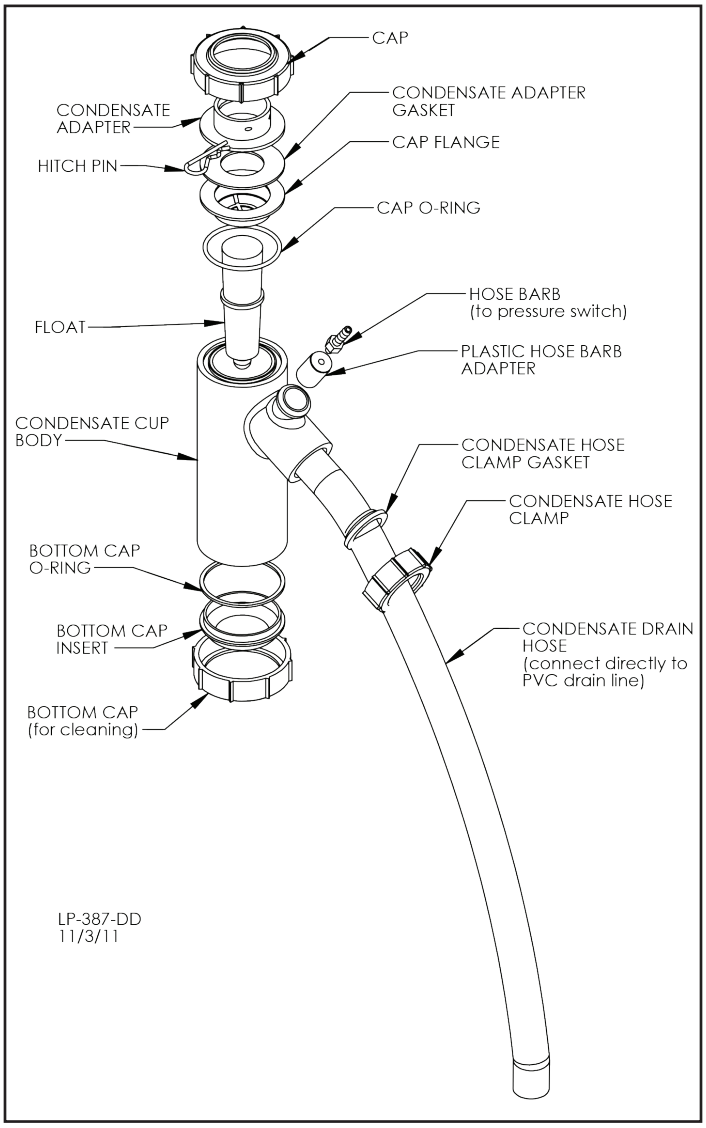

Figure 24 - Condensate Detail

Condensate Trap Installation Instructions

⚠ DANGER

The condensate trap assembly MUST BE PROPERLY INSTALLED according to these instructions when operating the boiler. Operating the boiler without the condensate trap assembly will cause flue gases to leak and result in serious personal injury or death.

1. Ensure all parts shown in Figure 24, Condensate Detail, are included with the condensate trap. If any parts are missing, DO NOT install the trap. Replace the entire condensate assembly.

NOTE: Before installation, clean out the condensate collector with water to remove any foreign matter that may block the condensate line.

⚠ WARNING

Do not install the condensate assembly if a component is lost or missing. Replace the entire assembly. Failure to follow this warning could result in property damage, serious personal injury, or death.

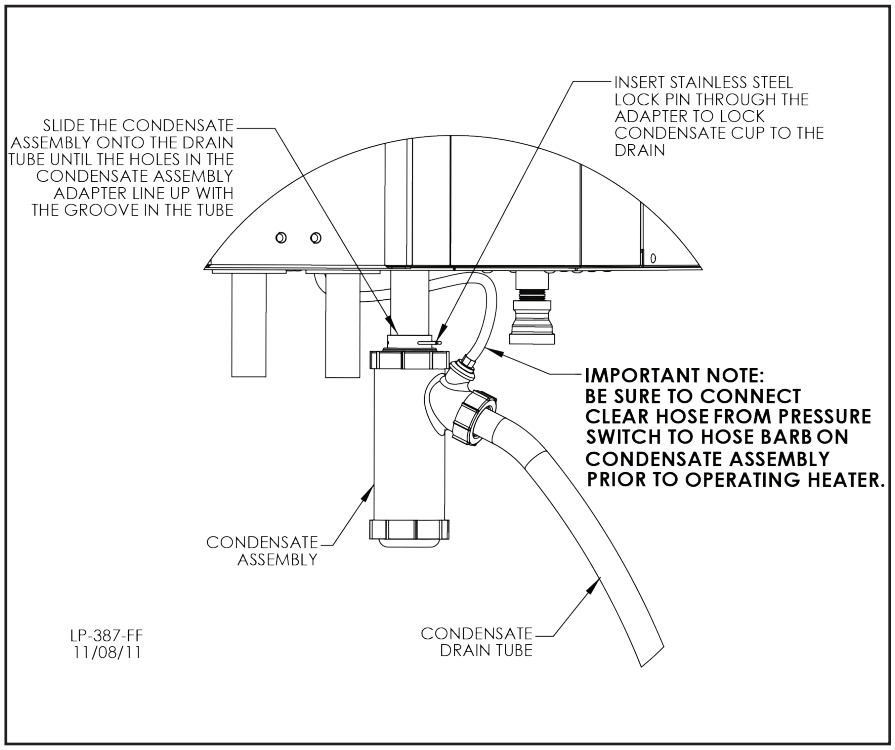

Figure 25 - Condensate Trap Installation

2. **NOTE:** The installer should fill the condensate trap with tap water prior to assembly on the boiler.
3. Slide the condensate trap adapter onto the drain tube until the holes line up with the groove.
4. Insert stainless steel lock pin to lock condensate adapter to the drain tube.
5. Connect the clear hose from the pressure switch to the hose barb.

⚠ WARNING

Do not operate the boiler without the clear hose attached from the hose barb to the pressure switch. Failure to follow this warning could result in property damage, serious personal injury, or death.

NOTE: The use of ¾" PVC or CPVC pipe are acceptable materials for condensate piping. However, use materials approved by the authority having jurisdiction.

In the absence of other authority, PVC and CPVC pipe must comply with ASTM D1785 or D2845. Cement and primer must comply with ASME D2564 or F493. For Canada, use CSA or ULC certified PVC or CPVC pipe, fittings, and cement. If pipe is used, deburr and chamfer pipe to allow proper mating to the drainage assembly.

5. Run condensate drain hose to 1" PVC or CPVC drain pipe. See Figure 26.

NOTE: DO NOT cement drain hose to the PVC drainage pipe!

NOTE: To allow for proper drainage on long horizontal runs, a second line vent may be required and tubing size may need to increase to 1". Failure to add a second vacuum break could result in condensate backup, improper boiler operation, and nuisance shutdowns.

NOTE: See Part 14, this manual, for instructions on how to maintain the condensate trap.

Condensate Neutralization

Condensate from the boiler is slightly acidic with a pH of 3.2 - 4.5. To avoid long term damage to the drainage system and to meet local code requirements, HTP recommends neutralizing the condensate with a Condensate Neutralizer Kit (Part # 7450P-212). The neutralizer kit connects to the drain system and contains limestone chips that neutralize the pH level of the water vapor. The neutralizer kit should be checked annually and the limestone chips replenished if necessary. When replacing the limestone chips, take care to ensure chips are no smaller than ½" to avoid blockage in condensate piping (for piping details, refer to condensate neutralizer installation instruction.)

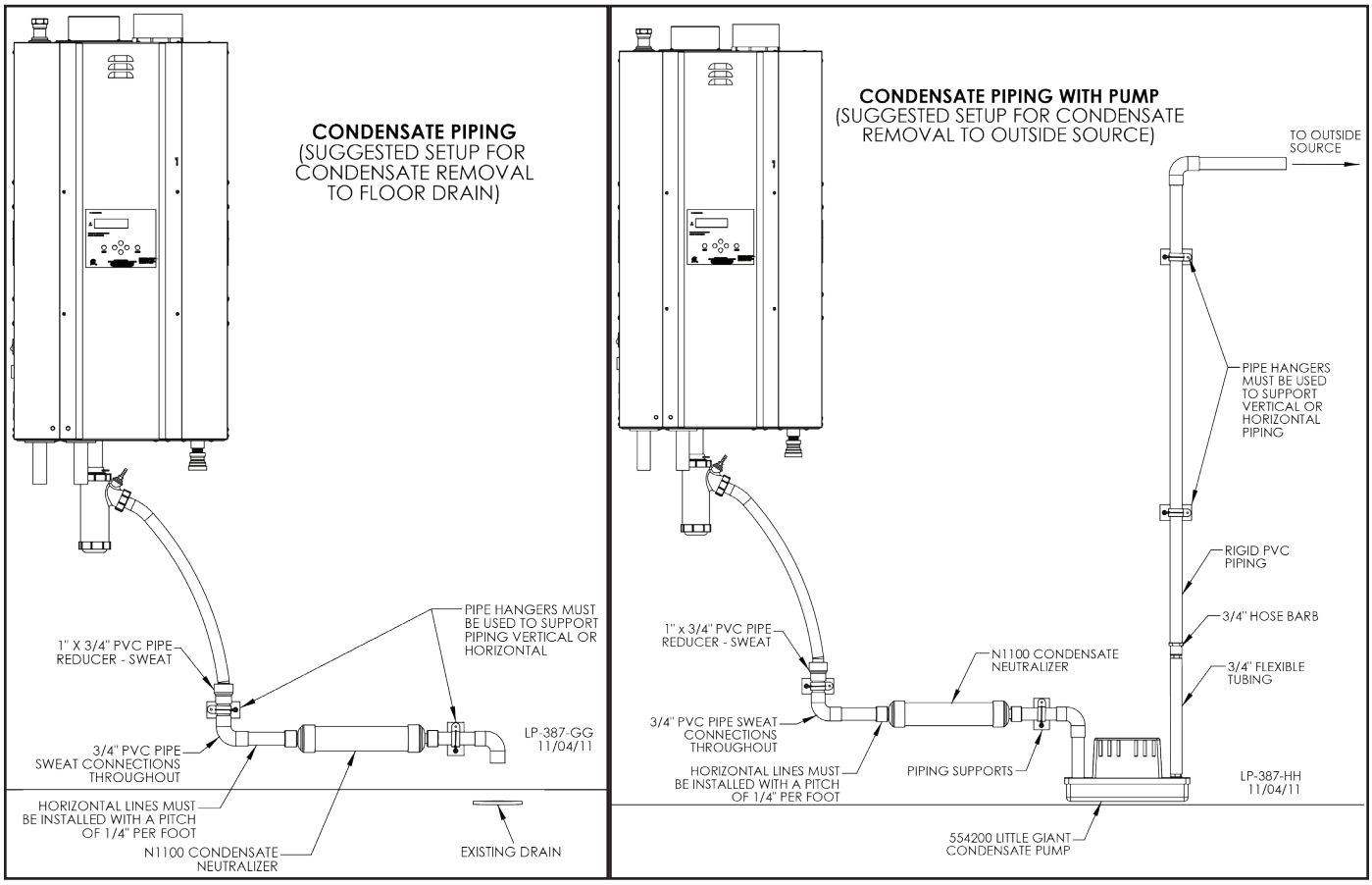

Figure 26 - Condensate Piping Suggestions

NOTES:

1. Condensate line must be pitched at least ¼" per foot to properly drain. If this cannot be done, or a very long length of condensate hose is used, increase the condensate line to a minimum of 1" ID and place a tee in the line after the condensate neutralizer to properly reduce vacuum lock in the drain line.
2. PVC or CPVC pipe should be the only material used for condensate line. Steel, brass, copper, and other metals will be subject to corrosion or deterioration.
3. A frozen condensate line could result in a blocked vent condition. It is very important to protect the condensate line from freezing temperatures or any type of blockage. In installations that may encounter sustained freezing conditions, the use of heat tape is recommended to avoid freezing of the condensate line. It is also recommended to bush up the condensate line size to 1" and terminate condensate discharge as close to the unit as possible. Longer condensate runs are more prone to freezing. Damages due to frozen or blocked condensate lines ARE NOT covered by warranty.
4. Support of the condensate line may be necessary to avoid blockage of the condensate flow.
5. To allow proper drainage on longer horizontal condensate runs, tubing size may need to increase to 1" and a second line vent may be required.

NOTE: To clean out condensate trap, see Maintenance section.

⚠ WARNING

Power to the optional condensate pump is continuous. When the boiler is powered off the condensate pump will remain on. It is important to remember to turn off the condensate pump when powering down the boiler. Failure to do so could result in property damage, severe personal injury, or death.

CAUTION

The condensate line must remain unobstructed. If allowed to freeze in the line or obstructed in any other manner, condensate can exit from the boiler tee, resulting in potential water damage to property. When installing a condensate pump, select one approved for use with condensing boilers and furnaces. The condensate pump should have an overflow switch to prevent property damage from spillage. Condensate from the boiler will be slightly acidic (pH from 3.2 to 4.5). Install a neutralizing filter if required by local codes.

Is is very important that condensate piping be no smaller than 3/4". Use a tee at the condensate connection with a branch vertically up and open to the atmosphere to prevent a vacuum that could obstruct the flow of condensate from the boiler. To prevent sagging and maintain pitch, condensate piping should be supported with pipe supports.

When installing a condensate pump, select one approved for use with condensing boilers and furnaces. The pump should have an overflow switch to prevent property damage from condensate spillage.

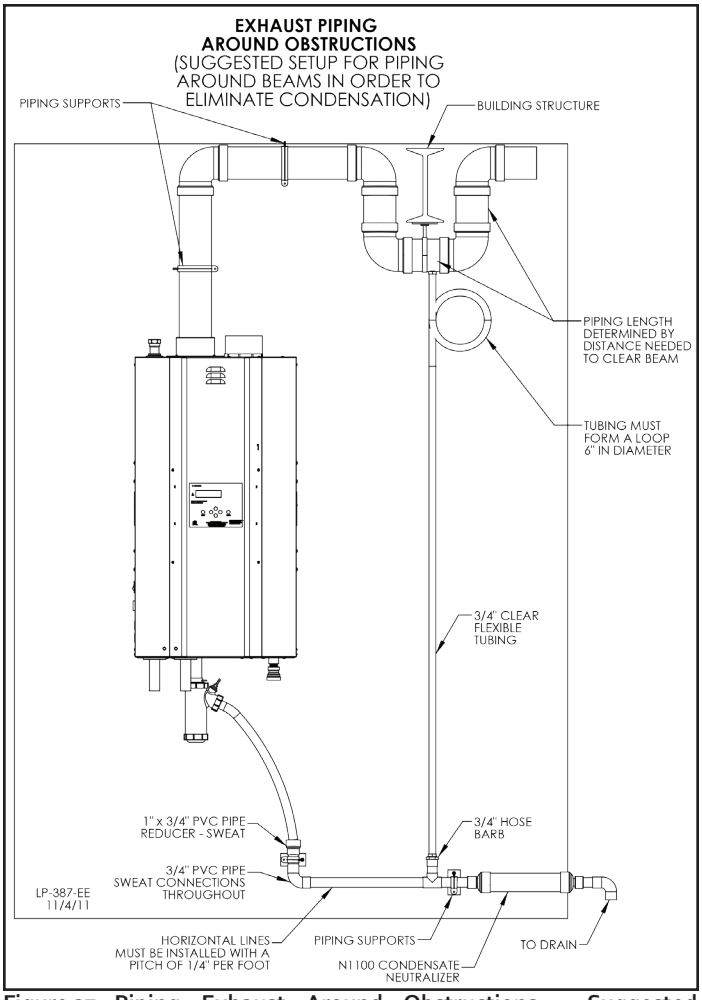

Figure 27 - Piping Exhaust Around Obstructions - Suggested Condensate Removal

Part 6 - Wiring

WARNING

To avoid electrical shock, turn off all power to the boiler prior to opening an electrical box within the unit. Ensure the power remains off while any wiring connections are being made. Failure to follow these instructions could result in component or product failure, serious injury, or death. Such product failure IS NOT covered by warranty.

Jumping out control circuits or components WILL VOID product warranty and can result in property damage, personal injury, or death.

It is of extreme importance that this unit be properly grounded. It is very important that the building system ground is inspected by a qualified electrician prior to making this connection. Electrical power must only be turned on when the boiler is completely filled with cold water. Failure to follow these instructions could result in component or product failure, serious injury, or death.

Electrical Shock Hazard - Turn off electrical power supply at service entrance panel before making any electrical connections. Failure to follow do do so could result in serious injury, or death.

CAUTION

Label all wires prior to disconnecting them when servicing the boiler. Wiring errors can cause improper and dangerous operation. Failure to follow these instructions may result in property damage or personal injury.

CAUTION

Wiring must be NEC Class 1. If original wiring supplied with the boiler must be replaced, use only TEW 105 ºC wire or equivalent. Boiler must be electrically grounded as required by the National Electrical Code, ANSI/NFPA 70 - Latest Edition.

A. Installation Must Comply With

1. National Electrical Code and any other national, state, provincial, or local codes or regulations.
2. In Canada, CSA C22.1, Canadian Electrical Code Part 1, and any local codes.

B. Field Wiring Terminations

All connections made to the boiler in the field are done inside the electrical junction box located on the left side of the unit. Multiple knockout locations are available to route field wires into and out of the electrical junction box.

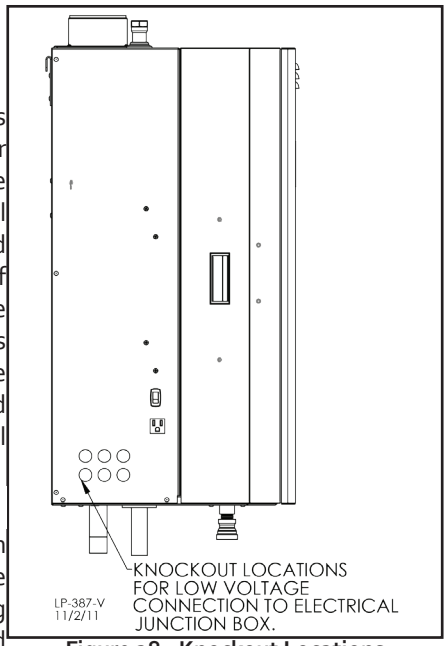

Figure 28 - Knockout Locations

C. Field Wiring

The control used in the boiler is capable of directly controlling 1 pump in standard mode and 2 pumps when configured as a cascade master boiler. As a standard unit, each pump can provide a maximum of 4 amps at 120 volts. If a pump requires more than this amount of power, an external contactor or motor starter is needed. If the boiler is configured as a cascade master, the system pump output is a dry contact output capable of switching 5 amps at 120 volts, in addition to the boiler pump output sourcing 4 amps each.

The electrical junction box has separate, clearly marked terminal strips for line voltage and low voltage wiring. Special jacks are provided for trouble-free cascade system wiring using standard CAT3 or CAT5 patch cables.

NOTE: If local electrical codes or conditions require an additional service switch, the installer must provide and install a fused disconnect or 15 amp (minimum) service switch.

D. Line Voltage Wiring for Standard Boiler

NOTE: A termination plug is included in the CAT 3 / CAT 5 Bus Connection Point, labeled J3 in Figure 29. DO NOT REMOVE THIS PLUG! Doing so will affect boiler operation and void warranty.

1. Connect the incoming power wiring to the line voltage terminal strip in the electrical junction box at terminals 120V, Neutral, Ground (shown in Figure 29).
2. A line voltage fused disconnect switch may be required, externally mounted and connected according to local codes that may apply.
3. Connect the boiler pump as shown in Figure 29 to the terminals marked 1 – (HOT), 2 – (NEUT), and 3 – (GND). The

connections shown are suitable for a maximum continuous pump draw of 3 amps at 120 volts. If the pump requires more current or voltage than the 120 volts supplied, an external motor starter or contactor will be required.

E. Alarm Connections

The control includes a dry contact alarm output. This is an SPDT circuit, rated at 5 amps at 120 volts. This contact can be used to activate an alarm light or bell or notify a building management system if the boiler goes into a lockout condition. The circuit between the ALARM COM and NC terminals is closed during normal operation and the circuit between ALARM COM and NO is open during normal operation. The connections depicted in Figure 29 show two 120 volt lights connected to the alarm terminals. One light will be on when the boiler is in normal mode and the other light will be on when the boiler is in lockout mode.

F. Low Voltage Connections for Standard Boiler

1. All low voltage cables should enter the electrical junction box through the provided knock out holes as shown in Figure 28.
2. Connect all low voltage field devices to the low voltage terminal strip located in the electrical junction box.

G. Thermostat

1. Connect the room thermostat to the terminals marked THERMOSTAT in the electrical junction box (see Figures 29 and 32). Alternately, any dry contact closure across these terminals will cause the boiler to run. Take caution to ensure neither of the terminals becomes connected to ground.
2. Mount the thermostat on an inside wall as central as possible to the area being heated, but away from drafts or heat producing devices such as television sets that could influence the ability of the thermostat to measure room temperature.
3. If the thermostat is equipped with an anticipator and it is connected directly to the boiler, the anticipator should be set at .1 amps. If the thermostat is connected to other device(s), the anticipator should be set to match the power requirements of the device(s). See the instruction manual of the connected device(s) for further information.

H. Outdoor Sensor

There is no connection required if an outdoor sensor is not used or the system requires a fixed operating temperature.
1. Use a minimum 22 AWG wire for runs of 100 feet or less and minimum 18 AWG wire for runs of up to 150 feet.
2. Mount the outdoor sensor on an exterior surface of the building, preferably on the north side in an area that will not be affected by direct sunlight and will be exposed to varying weather conditions.

NOTE: For correct mounting procedures, follow instructions provided with the sensor.

NOTE: If sensor wires are located in an area with sources of potential electromagnetic interference (EMI), the sensor wires should be shielded, or the wires routed in a grounded metal conduit. If using shielded cable, the shielding should be connected to the common ground of the boiler.

I. Indirect Sensor

There is no connection required if an indirect water heater is not used in the installation.
1. The boiler will operate an indirect fired water heater with either a thermostat type aquastat installed in the indirect tank or an HTP 7250P-325 tank sensor. When a tank sensor is used, the boiler control will automatically detect its presence and a demand for heat from the indirect water heater will be generated when the tank temperature falls below the user set point by more than the user selectable offset. The demand will continue until the sensor measures that the indirect water heater temperature is above the set point.
2. Connect the indirect sensor (7250P-325) to the terminals marked DHW SENSOR (shown in Figures 29 and 32) in the electrical junction box.

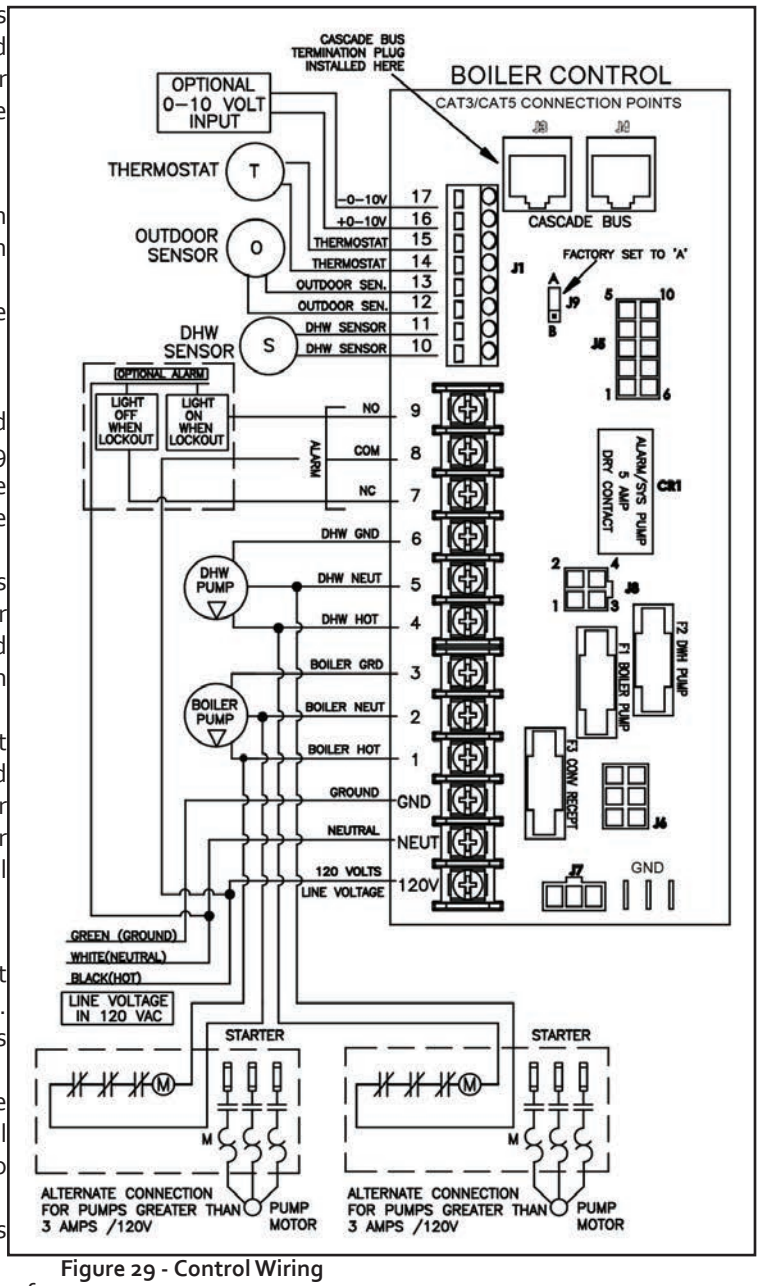

Figure 29 - Control Wiring

WARNING

Failure to use the correct sensor may result in tank temperature being either above or below set point, and could result in decreased performance, substantial property damage, or heightened risk of injuries due to scalds.

Caution should be used to ensure neither of these terminals becomes connected to ground. Failure to do so can result in property damage, personal injury, or death.

NOTE: If sensor wires are located in an area with sources of potential electromagnetic interference (EMI), the sensor wires should be shielded, or the wires routed in a grounded metal conduit. If using shielded cable, the shielding should be connected to the common ground of the boiler.

J. Optional 0-10 Volt Building Control Signal

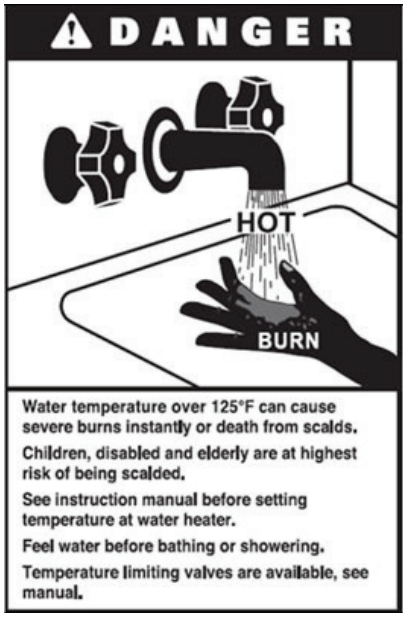

1. A signal from a building management system may be connected to the boiler to enable remote control. This signal should be a 0-10 volt positive-going DC signal. When this input is enabled using the installer menu, a building control system can be used to control the set point temperature of the boiler. The control interprets the 0-10 volt signal as follows; when the signal is between 0 and 1.5 volts, the boiler will be in stand¬by mode, not firing. When the signal rises above 1.5 volts, the boiler will ignite. As the signal continues to rise towards its maximum of 10 volts, the boiler will increase in set point temperature. See Part 10 for details on the setting of function 16.
2. Connect a building management system or other auxiliary control signal to the terminals marked 16, 0-10 VOLT + and 17, 0-10 VOLT – in the electrical junction box (shown in Figure 29). Caution should be used to ensure that the 0-10 VOLT + connection does not become connected to ground.
3. Move jumper on connection board (shown in Figure 31) from A to B.
4. See Function 17 this manual to program the 0-10 volt signal.

NOTE: When a 0-10 volt building management system is installed, the return sensor temperature cannot be monitored through the appliance display.

NOTE: Ensure that the polarity of the connections from the external modulating boiler controller to the boiler is correct. Reversed polarity could lead to erratic and/or no response from the boiler controller.

K. Optional UL353 Low Water Cut-Off Interface Kit

If an optional UL 353 Low Water Cut-Off (LWCO) Interface Kit is used, the control box of the kit should be mounted to the left side of the boiler cabinet near the low water cut-off probe, which is located on the outlet nipple of the boiler.

Follow the complete instructions included in the kit for proper installation.

NOTE: The control system senses system water temperatures entering and exiting the heat exchanger to provide protection against low water conditions. Where local codes or jurisdictions do not accept a pressure device for low water protection, the jurisdictions may accept these control functions as a means of providing low water protection.

L. Wiring of Cascade System Communication Bus

1. A Cascade Bus Termination Plug has been installed on the customer connection board of this boiler. The purpose of this plug is to stabilize communication between multiple boilers and reduce electrical "noise". See Figures 30 and 31 for Cascade Bus Termination Plug installation detail.
2. Use standard CAT3 or CAT5 computer network patch cables to connect the communication bus between each of the boilers. These cables are readily available at any office supply, computer, electronic, department or discount home supply store in varying lengths. If you possess the skills you can also construct custom length cables.
3. It is recommended to use the shortest length cable that will reach between the boilers and create a neat installation. Do not run unprotected cables across the floor where they may become wet or damaged. Avoid running communication cables parallel and close to or against high voltage (120 volt or greater) wiring. HTP recommends that the maximum length of communication bus cables not exceed 200 feet.
4. Route the communication cables through one of the knockouts in the cabinet.

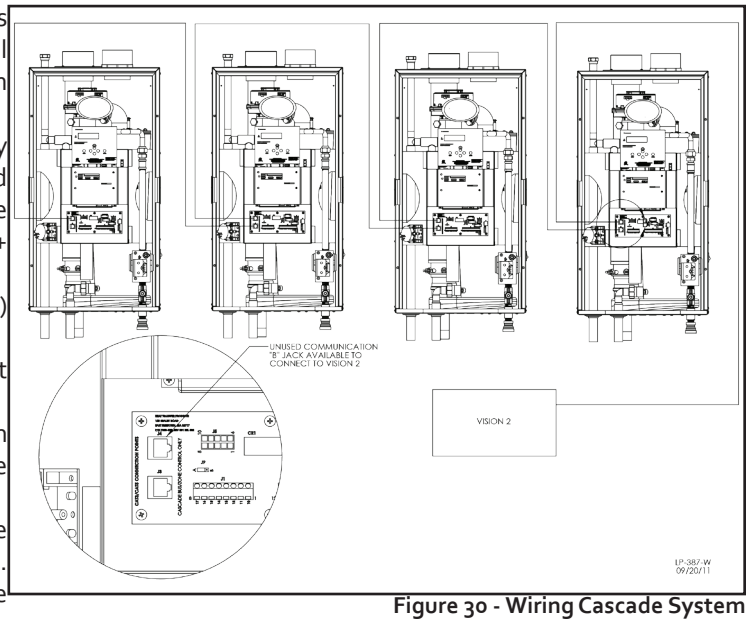

Figure 30 - Wiring Cascade System

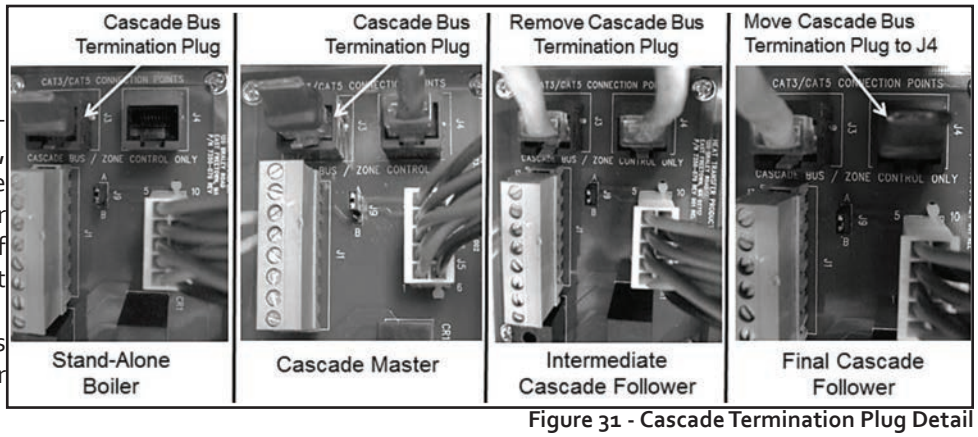

Figure 31 - Cascade Termination Plug Detail

5. Connect the boilers in a daisy chain configuration as shown below. It is best to wire the boilers using the shortest wire runs rather than trying to wire them in the order that they are addressed. The communication bus jacks on the customer connection panel are interchangeable so you can use either one or both in any order to connect the cable.

If you have connected the boilers to each other properly, there will be no open communication connection ports.

M. Cascade Master Pump and Sensor Wiring

1. Connect the system pump hot wire to the terminal marked 8.
2. Connect the system pump neutral to the 2 terminal and the pump ground wire to the 3 terminal.
3. Connect a jumper wire from the 120 VOLT terminal to the 9 terminal.
4. Connect the boiler pump to the terminals marked 1 (HOT), 2 (NEUT) and 3 (GND).
5. Connect system pipe sensor to terminals marked 10 and 11.

N. Cascade Follower Pump and Sensor Wiring

1. Connect the boiler pump to the terminals labeled 1 (HOT), 2 (NEUT), and 3 (GND).
2. An alarm bell or light can be connected to the alarm contacts of the follower boiler. The normally closed alarm contact may be used to turn a device off if the boiler goes into lockout mode. The alarm contacts are rated 5 amps at 120 VAC.

To connect an alarm device, connect the power for the device to the ALARM COM terminal. Connect the alarm device hot wire to the ALARM NO terminal. Connect the neutral or return of the alarm device to the neutral or return of the power for the alarm device.

To connect a device that should be powered off during a boiler lockout condition, follow the same instructions as above except use the ALARM NC terminal rather than the ALARM NC terminal. Note that in a cascade system the alarm output of the boiler addressed as #1 will also be active if the master boiler has a lockout condition. The alarm output of boilers addressed as 2-7 will only activate an alarm if a lockout condition occurs on that specific boiler.

See Figure 32 for Cascade Master and Follower Wiring detail.

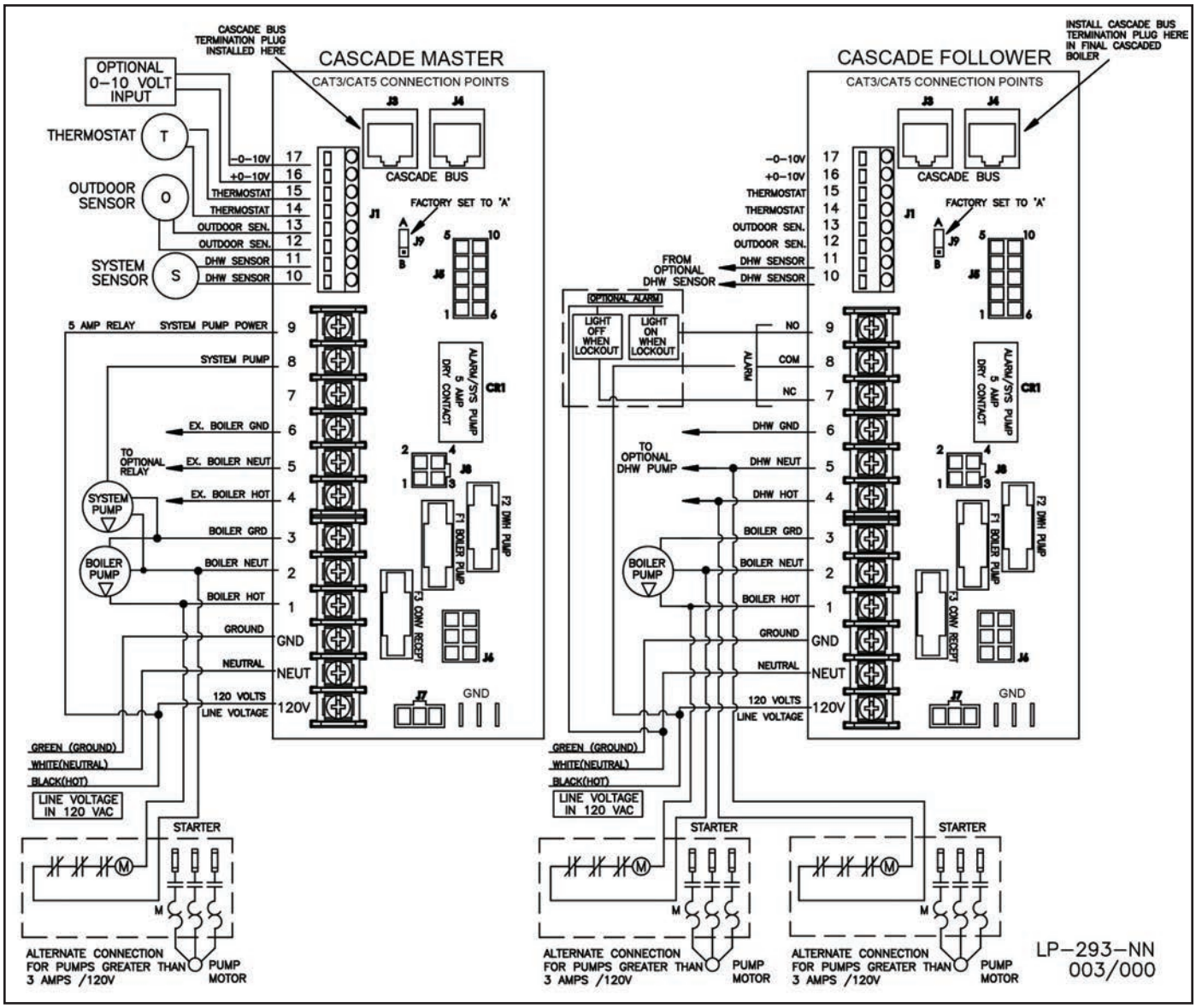

Figure 32 - Cascade Master and Follower Wiring

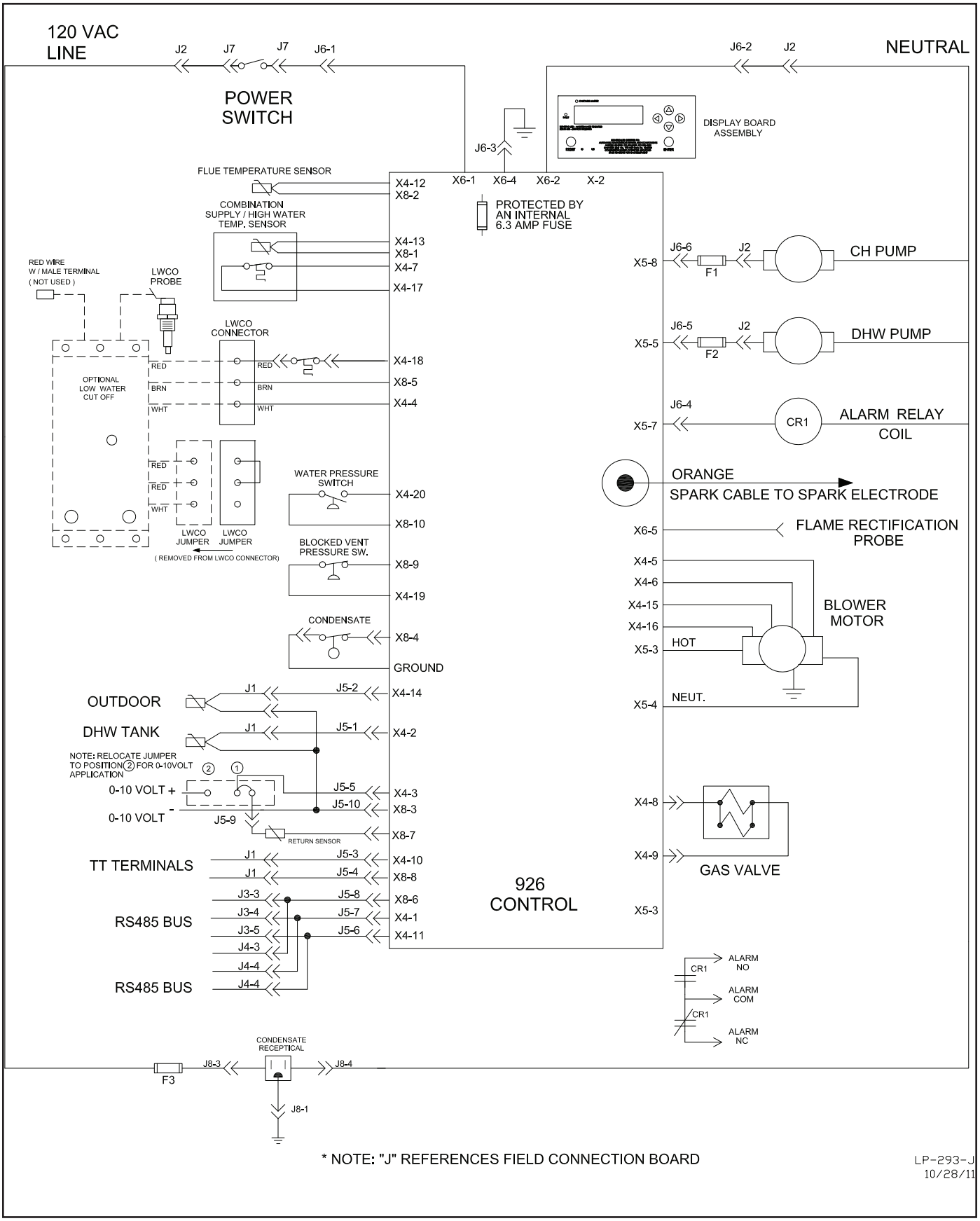

Figure 33 - Internal Connection Diagram

Part 7 - Gas Connections

⚠ WARNING

Failure to follow all precautions could result in fire, explosion, severe injury, or death.

It is very important that you are connected to the type of gas noted on the rating plate. "LP" for liquefied petroleum, propane gas, or "NG" for natural or city gas. Do not do a gas conversion without an approved gas conversion kit. Prior to turning the gas on, all gas connections must be approved by the local gas supplier or utility, in addition to the governing authority.

A gas conversion kit comes with the boiler. Follow the included instructions VERY carefully if converting the boiler. Failure to follow gas conversion instructions could result in property damage, serious injury, or death.

The gas supply shall have a maximum inlet pressure of less than 14" w.c. (3.5 kPa), and a minimum of 3.5" w.c. (.87 kPa). The entire piping system, gas meter and regulator must be sized properly to prevent pressure drop greater than 0.5" (.12 kPa) as stated in the National Fuel Gas Code. This information is listed on the rating label.

⚠ WARNING

UL recognized fuel gas detectors are recommended in all enclosed propane and natural gas applications where there is a potential for an explosive mixture of fuel gas to accumulate. The installation of these detectors should be made in accordance with the detector manufacturer's recommendations, and/or local laws. Failure to install fuel gas detectors in these applications could result in fire, explosion, property damage, severe personal injury, or death.

The gas connection on the boiler is 3/4". It is mandatory that this fitting is used for connection to a field fabricated drip leg as shown in the illustration per the National Fuel Gas Code. You must ensure that the entire gas line to the connection at the boiler is no smaller than the unit supplied connection.

Once all inspections have been performed, the piping must be leak tested. If the leak test requirement is a higher test pres¬sure than the maximum inlet pressure, you must isolate the boiler from the gas line. In order to do this, shut the gas off using factory and field-installed gas cocks. This will prevent high pressure. Failure to do so may damage the gas valve. In the event the gas valve is exposed to a pressure greater than ½ PSI, 14" w.c. (3.5 kPa), the gas valve must be replaced. Never use an open flame (match, lighter, etc.) to check gas connections.

A. Gas Piping

1. Run the gas supply line in accordance with all applicable codes.
2. Locate and install manual shutoff valves in accordance with state and local requirements.
3. In Canada, the Manual Shutoff must be identified by the installing contractor.
4. It is important to support gas piping as the unit is not designed to structurally support a large amount of weight.
5. Purge all gas lines thoroughly to avoid start up issues with air in the lines.
6. Sealing compound must be approved for gas connections. Care must be taken when applying compound to prevent blockage or obstruction of gas flow which may affect the operation of the unit.

⚠ WARNING

Support gas supply piping with hangers, not by the boiler or its accessories. The boiler gas valve and blower will not support the weight of the piping. Make sure the gas piping is protected from physical damage and freezing, where required. Failure to follow these instructions could result in gas leakage, and result in fire, explosion, property damage, severe personal injury, or death.

Do not use Teflon tape on gas line pipe thread. Use a pipe compound rated for use with natural and propane gases. Apply sparingly on male pipe ends, leaving the two end threads bare and flow unobstructed. Failure to follow these instructions could result in gas leakage or blockage, and result in fire, explosion, property damage, severe personal injury, or death.

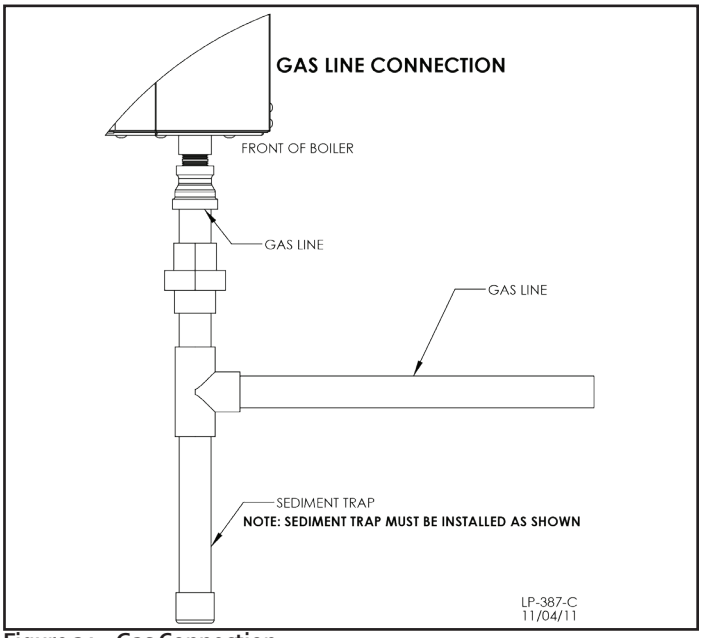

Figure 34 - Gas Connection

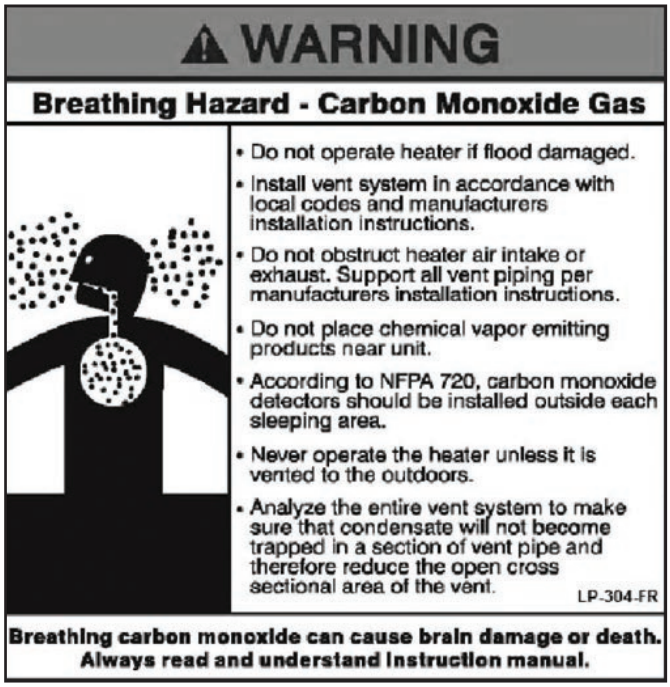

⚠ WARNING

Never use an open flame (match or lighter) to check for gas leaks. Use a soapy solution to test connection. Failure to use a soapy solution test or check gas connection for leaks can result in substantial property damage, severe personal injury, or death.

CAUTION

Use two wrenches when tightening gas piping at the boiler: One to prevent the boiler gas line from turning. Failure to prevent the boiler gas connection from turning could result in damage to the gas line components, substantial property damage, severe personal injury, or death.

CSA or UL listed flexible gas connections can be used when installing the boiler. Flexible gas connections have different capacities and must be sized correctly for the connected boiler firing rates. Consult with the flex line supplier to assure the line size is adequate for the job. Follow local codes for proper installation and service requirements.

B. Check Inlet Gas Pressure

The gas valve is equipped with an inlet gas pressure tap that can be used to measure the gas pressure to the unit. To check gas pressure, perform the steps listed below:

1. **IMPORTANT!** Before you connect to the inlet pressure, shut off the gas and electrical power to unit.
2. Loosen the pressure tap with a small screwdriver. Refer to Figure 35 for location.
3. Each unit is equipped with a needle valve that will accept a 5/16 ID hose to connect to a digital manometer or liquid gauge to measure incoming pressure from 0-35" w.c. See Figure 35.
4. Turn on the gas and power up the unit.
5. Put the unit into manual test mode (details on test mode are in Part 10). In test mode, monitor pressure to assure it does not drop below 1 inch from its idle reading. If gas pressure is out of range or pressure drop is excessive, contact the gas utility, gas supplier, qualified installer, or service agency to determine correct action that is needed to provide proper gas pressure to the unit. If Gas Pressure is within normal range proceed to Step 6.
6. Exit test mode, then turn power off and shut off gas supply at the manual gas valve before disconnecting the hose from the gas monitoring device. Tighten screw on the pressure tap and turn gas on. Check for leaks with soapy solution. Bubbles will appear on the pipe to indicate a leak is present.

Nominal Iron Pipe Size (inches)	Internal Diameter (inches)	Length of Pipe (Feet)							
		10	20	30	40	50	60	70	
3/4	.824	278	190	152	130	115	105	96	BTU'S PER HOUR x1,000
1	1.049	520	350	285	245	215	195	180	
1 1/4	1.380	1,050	730	590	500	440	400	370	
1 1/2	1.610	1,600	1,100	890	760	670	610	560	
		80	90	100	125	150	175	200	
3/4	.824	90	84	79	72	64	59	55	BTU'S PER HOUR x1,000
1	1.049	170	160	150	130	120	110	100	
1 1/4	1.380	350	320	305	275	250	225	210	
1 1/2	1.610	530	490	460	410	380	350	320	

Table 13 - Gas Pipe Sizing / BTU's per Hour

⚠ WARNING

Ensure the pressure tap screw is properly tightened to prevent gas leaks. Failure to do so could cause substantial property damage, severe personal injury, or death.

The gas piping must be sized for the proper flow and length of pipe to avoid pressure drop. The gas meter and regulator must be properly sized for the total gas load. If you experience a pressure drop greater than 1" w.c. (.87 kPa), the meter, regulator or gas line may be undersized or in need of service. You can attach a manometer to the incoming gas drip leg after removing the cap. The gas pressure must remain between 3.5" (.87 kPa) and 14" (3.5 kPa) during stand-by (static) mode and while in operating (dynamic) mode.

If an in-line regulator is used, it must be a minimum of 10 feet from the boiler. It is very important that the gas line is properly purged by the gas supplier or utility. Failure to properly purge the lines, or improper line sizing, will result in ignition failure. This problem is especially noticeable in NEW LP installations and empty tank situations. This situation can also occur when a utility company shuts off service to an area to provide maintenance to their lines. This gas valve must not be replaced with a conventional gas valve under any circumstances.

⚠ WARNING

Gas conversion should be performed BEFORE the boiler is installed. Carefully follow the gas conversion instructions when performing the conversion.

Do not do a gas conversion on this boiler without an officially approved conversion kit and instructions supplied by HTP. Failure to use a conversion kit when converting the boiler to fire on Natural or Propane gas will result in extremely dangerous burner operation, leading to fire, explosion, severe personal injury, or death.

Strain on the gas valve and fittings may result in vibration, premature component failure and gas leakage, and result in fire, explosion, property damage, severe personal injury, or death.

Adjustments to the throttle screw or offset may only be made by a qualified gas technician using a calibrated combustion analyzer capable of measuring CO_2 and CO. Failure to follow this instruction could result in fire, explosion, property damage, severe personal injury, or death.

DO NOT adjust or attempt to measure gas valve outlet pressure. The gas valve is factory-set for the correct outlet pressure and requires no field adjustment. Attempts by the installer to adjust or measure the gas valve outlet pressure could result in damage to the valve and cause substantial property damage, severe personal injury, or death.

Ensure that the high gas pressure regulator is as least 6 – 10 feet upstream of the appliance. Failure to do so could result in substantial property damage, severe personal injury, or death.

C. Boiler Gas Valve

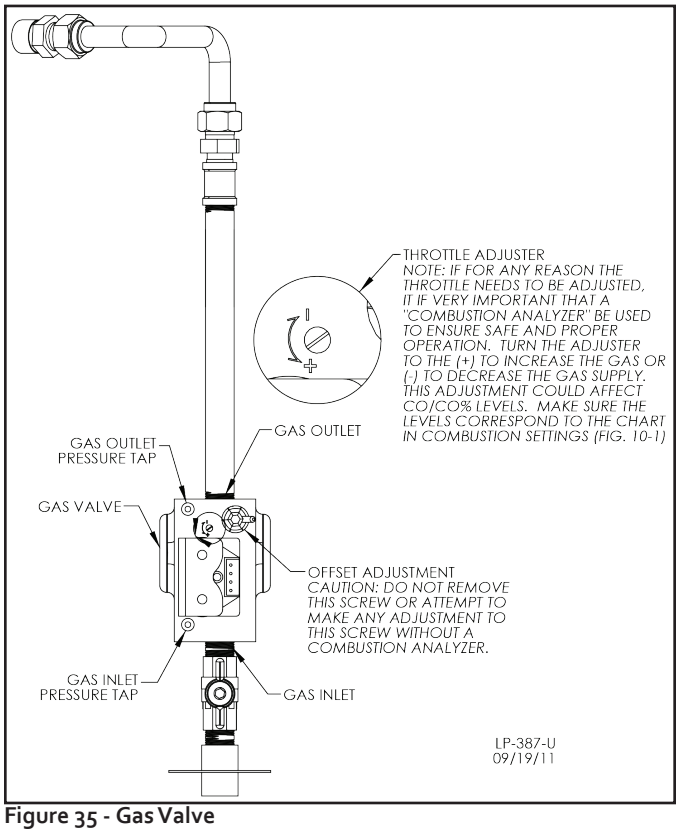

Figure 35 - Gas Valve

Part 8 - Start-Up Preparation

WARNING

Thoroughly clean and flush any system that has used glycol before installing the boiler. Provide the customer with a material safety data sheet (MSDS) on the fluid used.

A. Check / Control Water Chemistry

CAUTION

Chemical imbalance of your water can cause severe damage to your boiler and associated equipment, and may also affect efficiency. You may have to have your water quality professionally analyzed to determine whether you need to install a water softener. It is important that the water chemistry on both the domestic hot water and central heating sides are checked before installing the boiler, as water quality will affect the reliability of the system. Outlined below are those water quality parameters which need to be met in order for the system to operate efficiently for many years. Failure of a heat exchanger due to lime scale build-up on the heating surface, low pH or other imbalance IS NOT covered by the warranty.

To assure extended service life, it is recommended to test water quality prior to installation. Listed below are some guidelines.

CAUTION

Do not use petroleum-based cleaning or sealing compounds in the boiler system. Damage to elastomer seals and gaskets in the system could occur, resulting in substantial property damage.

Sodium less than 20 mGL

Water pH between 6.0 and 8.0

1. Maintain boiler water pH between 6.0 and 8.0. Check with litmus paper or have it chemically analyzed by a water treatment company.
2. If the pH differs from above, consult local water treatment company for treatment needed.

Hardness less than 7 grains

Consult local water treatment companies for unusually hard water areas (above 7 grains hardness).

Chlorine concentration less than 100 ppm

1. Using chlorinated fresh water should be acceptable since drinking water chlorine levels are typically less than 5 ppm.
2. Do not connect the boiler to directly heat a swimming pool or spa water.
3. Do not fill boiler or operate with water containing chlorine in excess of 100 ppm.

Hardness: Less than 7 grains
Chloride levels: Less than 100 ppm
pH levels: 6 - 8
Conductivity: Less than 400 uS/cm at 25°C
Sodium: Less than 20 mGL
Copper: Less than 0.1 mg/:
Iron: Less than 0.5 mg/L

Clean system to remove sediment*

1. You must thoroughly flush the system (without boiler connected) to remove sediment. The high-efficiency heat exchanger can be damaged by buildup or corrosion due to sediment.
2. For zoned systems, flush each zone separately through a purge valve. (If purge valves and isolation valves are not already installed, install them to properly clean the system.)
3. Flush system until water runs clean and you are sure piping is free of sediment.

***NOTE:** It is recommended you clean heat exchanger at least once a year to prevent lime scale buildup. Follow the maintenance procedure to clean the heat exchanger in the Maintenance Section of this manual.

Test/replace freeze protection fluid

1. For systems using freeze protection fluids, follow fluid manufacturer's instructions to verify inhibitor level and that other fluid characteristics are satisfactory.
2. Freeze protection fluid must be replaced periodically due to degradation of inhibitors over time. Follow all fluid manufacturer instructions.

NOTE: Boiler failure due to improper water chemistry is not covered by warranty.

B. Check for Gas Leaks

WARNING

Before starting the boiler, and during initial operation, smell near the floor and around the boiler for gas odorant or any unusual odor. Remove boiler front door and smell interior of boiler enclosure. Do not proceed with startup if there is any indication of a gas leak. Repair any leaks at once.

WARNING

PROPANE BOILERS ONLY – The propane supplier mixes an odorant with the propane to make its presence detectable. In some instances the odorant can fade, and the gas may no longer have an odor. Before startup (and periodically thereafter), have the propane supplier verify the correct odorant level in the gas.

C. Freeze Protection (When Used)

WARNING

NEVER use automotive or standard glycol antifreeze. Do not use ethylene glycol made for hydronic systems. Use only freeze-protection fluids certified by fluid manufacturer as suitable for use with stainless steel boilers, verified in the fluid manufacturer's literature. Thoroughly clean and flush any system that has used glycol before installing the new boiler. Provide the boiler owner with a material safety data sheet (MSDS) on the fluid used.

1. Determine the freeze protection fluid quantity using total system water content following the fluid manufacturer's instructions. Remember to include expansion tank water content.
2. Local codes may require back flow preventer or actual disconnect from city water supply.
3. When using freeze protection fluid with automatic fill, install a water meter to monitor water makeup. Freeze protection fluid may leak before the water begins to leak, causing concentration to drop, reducing the freeze protection level.

D. Fill and Test Water System

WARNING

Ensure the boiler is full of water before firing the burner. Failure to do so will damage the boiler. Such damage IS NOT covered by warranty, and could result in property damage, severe personal injury, or death.

1. Fill the system only after ensuring water chemistry meets the requirements listed in this manual.
2. Close the manual and automatic air vents and boiler drain valve.
3. Fill to the correct system pressure. Correct pressure will vary with each application.
   a. Typical cold water fill pressure for a residential system is 12 psi.
   b. Pressure will rise when boiler is turned on and system water temperature increases. Operating pressure must never exceed the relief valve pressure setting.
4. At initial fill and during boiler startup and testing, check system thoroughly for leaks. Repair all leaks before proceeding further.

WARNING

Eliminate all system leaks. Continual fresh make-up water will reduce boiler life. Minerals can build up in the heat exchanger, reducing heat transfer, overheating the heat exchanger and causing heat exchanger failure.

5. The system may have residual substances that could affect water chemistry. After the system has been filled and leak tested, verify that water pH and chlorine concentrations are acceptable by sample testing.

CAUTION

It is important to purge the system of air to avoid damage to the boiler.

E. Purge Air from Water System

1. Purge air from the system:
   a. Connect a hose to the purge valve and route hose to an area where water can drain and be seen.
   b. Close the boiler or system isolation valve between the purge valve and fill connection to the system.
   c. Close zone isolation valves.
   d. Open quick-fill valve on cold water make-up line.
   e. Open purge valve.
   f. Open the isolation valves one zone at a time. Allow water to run through the zone, pushing out the air. Run water until no noticeable air flow is present. Close the zone isolation valves and proceed with the next zone. Follow this procedure until all zones are purged.
   g. Close the quick-fill water valve and purge valve and remove the hose. Open all isolation valves. Watch the system pressure rise to correct cold-fill pressure. It is recommended that you put the pumps into manual operation to assist in purging the circuits.
   h. Disconnect the wires that are connected to the THERMOSTAT terminals of the customer connection board. Apply power to the boiler. The display will show the temperature of the water in the boiler. Press the **v** and **ENTER** keys simultaneously and hold for 1 second. The display will read:

```
SERVICE PUMP CH
PUMP ON        11:47A
```

The central heating pump will come on. If you then press the **^** key, the central heating pump will shut off. The display will read:

```
SERVICE PUMP DH
PUMP ON        11:47A
```

The DHW pump will come on. If the boiler is set up as a cascade master and you then press the **^** key again, the DHW pump will shut off. The display will read:

```
SERVICE PUMP SH
PUMP ON        11:47A
```

The system pump will come on. Use the **^** and **v** keys to toggle between running each pump in the system as required to help bleed out all entrapped air. Some good indicators that air is removed include the absence of gurgling noises in the pipes and pump operation becoming very quiet. Pressing **^** and **v** together at any time will return the boiler to normal operation.
   i. After the system has operated for five minutes, eliminate any residual air by using the manual air vents located throughout the system.
   j. If purge valves are not installed in the system, open manual air vents in the system one at a time, beginning with the lowest floor. Close vent when water squirts out. Repeat with

remaining vents.
k. Refill to correct pressure.

F. Check Thermostat Circuit(s)

1. Disconnect the two external wires connected to the boiler thermostat terminals (low voltage terminal strip).
2. Connect a voltmeter across these two incoming wires with power supplied to the thermostat circuits. Close each thermostat, zone valve and relay in the external circuit one at a time and check the voltmeter reading across the incoming wires.
3. There should NEVER be a voltage reading.
4. If a voltage reading does occur under any condition, check and correct the external wiring. (This is a common problem when using 3-wire zone valves.)
5. Once the external thermostat circuit wiring is checked and corrected if necessary, reconnect the external thermostat circuit wires to the boiler low voltage terminal strip. Allow the boiler to cycle.

G. Condensate Removal

1. The boiler is a high efficiency condensing boiler. Therefore, the unit has a condensate drain. Condensate fluid is nothing more than water vapor, derived from combustion products, similar to that produced by an automobile when it is initially started.

Condensation is slightly acidic (typically with a pH of 3 to 5) and must be piped with the correct materials. Never pipe the condensate using steel, copper, brass or other materials that will be subject to corrosion. Plastic PVC or CPVC pipe are the only approved materials.

A condensate neutralizer, if required by local authorities, can be made up of lime crystals, marble or phosphate chips that will neutralize the condensate. This may be done by the installer or you may purchase a condensate neutralizer from HTP (7450P-212).

2. The boiler is equipped with a ¾ female socket weld fitting connection that must be piped to a local drain. It is very important that the condensate line is sloped downward away from the boiler to a suitable inside drain. If the condensate outlet on the appliance is lower than the drain, you must use a condensate removal pump, available from HTP (554200). This pump is equipped with two leads that can be connected to an alarm or another type of warning device to alert the user of a condensate overflow, which, if not corrected, could cause property damage.
3. If a long horizontal run is used, it may be necessary to create a vent in the horizontal run to prevent a vacuum lock in the condensate line.
4. Do not expose the condensate to freezing temperatures.
5. It is very important you support the condensation line to assure proper drainage.

H. Final Checks Before Starting Boiler

1. Read Startup Procedures within this manual for proper steps to start boiler. (See Startup Report to record steps for future reference.)
2. Verify the boiler and system are full of water and all system components are correctly set for operation.

⚠ WARNING

Ensure the boiler is full of water before firing the burner. Failure to do so will damage the boiler. Such damage IS NOT covered by warranty, and could result in property damage, severe personal injury, or death.

3. Fill condensate trap with water.
4. Verify electrical connections are correct and securely attached.
5. Inspect exhaust vent and intake piping for signs of deterioration from corrosion, physical damage or sagging. Verify exhaust vent and intake piping are intact and correctly installed per Venting Section and local codes.

I. Setting Up a Single Boiler

When power is applied to the boiler, the control first completes a power-up systems check. During this time the combustion fan may run. The display will initially show the current boiler supply temperature. If a fault is detected during the power-up test, the control will display the appropriate fault code. Otherwise, the display will continue to show the boiler supply temperature and stand-by, waiting for a demand for heat.

When a demand for heat is received, the control begins the following demand sequence. The boiler first turns on the pump. The control will measure the supply temperature. If it is below the set point temperature minus the ignition differential the control will ignite the burner.

After the burner is lit, the control modulates the firing rate to control the supply water temperature and meet the heat demand. When the thermostat or indirect water heater temperature is met, the control will extinguish the burner and run the combustion fan to purge gasses from the combustion chamber. In addition, the pump will run for a pump post purge interval. The control will then be in standby, waiting to process the next demand for heat.

During this process, the control will extinguish the burner if it senses a dangerous or unsafe condition. If the control determines that a dangerous or unsafe condition has occurred, the control may lock out the boiler and prevent it from igniting until a maintenance person diagnoses the problem, repairs it, and resets the control. In the event that the control goes into lockout, it will show a diagnostic code on the display, illuminate the LED fault indicator, and close the alarm relay contacts to aid in recognition of the condition, diagnosis, and repair.

J. Setting Up a Cascaded System

If the boiler is part of a cascaded system the operation is somewhat different. The control of each boiler in a cascaded system completes its own power up system check. One of the boilers in the cascade system is designated as the master boiler. After the master boiler completes its power up sequence, it checks the communication bus to see if any other boilers are present. If other boilers are present, the master control determines these follower boiler addresses. The master boiler control will recheck the bus every few seconds as long as it is powered up to update the status of the connected boilers. The control in the master boiler processes all heat demands and dictates which of the follower boilers should light and what firing rate the followers should try to achieve.

When the master boiler receives a demand for heat, it determines which boiler is first in the firing sequence and sends that boiler a command to begin a demand sequence. That boiler will then

begin a demand sequence as described above. Once the boiler ignites, the master boiler control will increase the firing rate command to that boiler until the system sensor temperature is at the set point temperature plus the differential, or that boiler is at high firing rate. If the command from the master boiler control gets to the high firing rate of the follower boiler, but the system sensor is below the required temperature, the master boiler control will then tell the next boiler in the firing sequence to begin its demand sequence. The master boiler control will then begin to ramp up the firing rate command of that boiler. This process will continue while there is a demand until all boilers in the cascade system are at high fire or the desired temperature of the system sensor is reached. If the system sensor temperature reaches tank set point and differential before all boilers are at high fire, the master control will modulate the cascade command signal to maintain the system sensor at set point and differential until the demand is complete. When the system sensor is equal to the set point temperature, demand is complete, and the master boiler control will extinguish all boilers that may be lit. If the demand decreases, the firing rate command and amount of boilers lit will decrease exactly opposite as described above.

Whenever the master boiler control needs to fire a follower boiler, it sends a firing rate command to that boiler. The follower boiler will respond to the command until its supply sensor temperature gets to be 5°F above the set point temperature plus the differential, at which point the individual boiler will modulate on its own so as not to overheat. As a result, it is not uncommon to see the cascade output at maximum but individual boilers firing at less than their maximum firing rate.

K. Lockout Condition

If any boilers, including the master boiler in the cascade system, are in a lockout condition, the master control will recognize the lockout condition and skip over the boiler in the firing sequence. Each boiler in the cascade system is responsible for its own safety functions. So, if any individual boiler control senses an unsafe condition, it will extinguish the burner and, if necessary, go to a lockout condition. In this way, every boiler in the system has its individual safety controls intact and operational, even if the firing of the boiler is under control of the master boiler.

In the event that the system sensor fails, all boilers in the system will ignite simultaneously when there is a demand, and each boiler will individually regulate firing rates to maintain the master set point temperature (supply temperature set point + differential) at the individual supply sensors built into the boiler. If this should happen, the master boiler will display an E03 fault code, indicating that the supply sensor has failed.

L. Cascade System Programming

1. If the boiler is used alone, skip this section.

2. Programming the Master Boiler:

a. Make sure there is no demand for heat being supplied to the boiler.

b. Apply power to the boiler.

c. Enter the system setting program navigation following instructions in Part 10 of this manual.

d. Verify that cascade address function 15 is set to 0. This makes the master boiler address 0. NOTE: The Master Boiler MUST be addressed as 0.

e. Change Cascade Mode function 23 to 926 Boilrs. This makes it the master boiler.

f. Exit the installer menu.

NOTE: The temperature set point of the master must match the follower boiler set point in order for the system to operate properly.

3. Programming Follower Boilers:

NOTE: READ THE NOTES BELOW BEFORE PROGRAMMING FOLLOWER BOILERS

- The boiler addressed as 1 will share its alarm output with the master boiler.
- If one of the follower boilers has an indirect fired water heater connected to it, the address of this boiler must be 2 or greater.
- It is recommended but not necessary to address boilers in the order that they are wired.
- No two boilers can have the same address.
- It is not required to use all consecutive address numbers. Example: In a 2 boiler system with an indirect connected to the follower, the follower address would be 2 (address 1 is not used).

a. Make sure there is no demand for heat being supplied to the master boiler

b. Apply power to the follower boiler you are working on.

c. Enter system settings following instructions in Part 10 of this manual

d. Set cascade address parameter 15 to 1 for the first follower, 2 for the second follower, etc. depending on which boiler you are programming based on the above notes.

e. Change "CASCADE MODE" parameter to "926 BOILRS". This makes the boiler a follower boiler and enables all data to be transferred between boilers as needed for the system to function to full capability.

f. Exit the installer menu.

NOTE: The temperature set point of the follower must match the master boiler set point in order for the system to operate properly.

Part 9 - Start-Up Procedure

⚠ WARNING

FOR YOUR OWN SAFETY READ BEFORE OPERATING

1. This boiler does not have a pilot. It is equipped with an ignition device which automatically lights the burner. Do not try to light the burner by hand.
2. BEFORE OPERATING: Smell all around the boiler area for gas. Be sure to smell next to the floor because some gas is heavier than air and will settle on the floor.

3. WHAT TO DO IF YOU SMELL GAS

- Do not try to light any boiler.
- Do not touch any electric switch, do not use any phone in your building.
- Immediately call your gas supplier from a neighbor's phone. Follow the gas suppliers' instructions.
- If you cannot reach your gas supplier, call the fire department.
- Turn off the gas shutoff valve (located outside the boiler) so that the handle is crosswise to the gas pipe. If the handle will not turn by hand, don't try to force or repair it, call a qualified service technician. Force or attempted repair may result in a fire or explosion.

4. Do not use this boiler if any part has been under water. Immediately call a qualified service technician to inspect the boiler and to replace any part of the control system and any gas control that has been damaged.
5. The boiler shall be installed so the gas ignition system components are protected from water (dripping, spraying, rain, etc.) during boiler operation and service (circulator replacement, condensate trap, control replacement, etc.)

Failure to follow these instructions could result in property damage, serious personal injury, or death.

If you discover any evidence of a gas leak, shut down the boiler at once. Find the leak source with a bubble test and repair immediately. Do not start the boiler again until the leak is repaired. Failure to comply could result in substantial property damage, severe personal injury, or death.

A. Control Overview

The control is one of the primary safety devices of the boiler. It monitors the safety sensors of the boiler to assure safe and efficient operation.

The control has many features associated with system design. This section addresses programming features, including Boiler Settings / System Settings / Maintenance Settings and System Diagnostics, to help in customizing your control. It is important to fully understand control capabilities before customization, as its factory defaults may already fit your system design and not require any adjustment at all.

B. Navigation of the Display

The display includes a two line backlit LCD readout to provide informative messages about the operation of the boiler. Many operating parameters can be viewed and adjusted by using the six buttons on the display. The function of each button is described below.

RESET – The RESET button has two functions.

– Resets any lockout error code
– Returns the user to the default display screen.

ENTER – The ENTER key is used to access parameter programming mode. To access this mode, hold down the ENTER key for more than 4 seconds. The readout will change to:

```
ENTER MENU CODE
000
```

One of the zeroes will be blinking. Use the **^ v** arrow keys to change the blinking digit to the correct value. Use the **< >** arrow keys to select the next digit to change and again use the **^ v** keys to change the value. Repeat until the correct code is entered. Press the **ENTER** key to accept the code entered. If the code is correct, the readout will change to the appropriate screen. If the programming code is not accepted, the readout will continue to display as shown above.

ENTER is also used to enable a function for editing. After the user navigates to the desired function, the user holds down **ENTER** for one second. When **ENTER** is released, the function value will begin to blink. The function can now be changed using the **^ v** keys. After the new value is displayed, the user then presses **ENTER** for 1 second to lock the new value of the function. The value will then stop blinking.

LEFT AND RIGHT ARROW KEYS – **< >** are used to navigate between the default display, status display, analog and cascade displays if they are enabled. The **< >** keys are also used in programming modes to change between programmable functions. It is recommended you use the Menu Maps in the back of this manual and the detailed menu instructions printed in this section to help in menu navigation.

UP AND DOWN ARROW KEYS – **^ v** are used to navigate between the various functions displayed in the menu. After the function is enabled for editing by pushing the **ENTER** key, the **^ v** keys are used to adjust the function upward or downward to the desired value.

C. Operating Instructions

Before operating the unit, it is important to remove the cover and verify that the gas line and water lines are connected to boiler and fully purged. If you smell gas, STOP; Follow the safety instructions listed in the first part of this section. If you do not smell gas, follow the next steps.

1. Turn down the thermostats before applying power to the boiler. If 0–10 volt or other inputs are used, make sure that they are set so there is no call for heat while programming.
2. Turn on the power to the boiler or boilers if a cascade system used.
3. Next, check the boiler settings. Adjustment and factory defaults are outlined within this section. If a cascade system is used, it is important that all the boilers have the same boiler settings.
4. Next, check the system settings. Adjustments and factory defaults are outlined within this section. If a cascade system is used, it is important that the Master Boiler is programmed with the correct system settings.
5. Create a demand on the boiler or boilers if a cascade system is used. The user can monitor system functions when the boilers are operational.
6. If the boilers fail to start, refer to the troubleshooting section in the back of this manual.

D. Programming Boiler Settings

Boiler Setting Program Access

Note: Programming the boiler control is not possible when the boiler is firing. Make sure any input which can create a demand on the boiler, such as the tank thermostat, is turned off, so the boiler will remain idle to allow programming.

Screen	Description
ENTER MENU CODE 000	To access the boiler setting program, press and hold **ENTER** for 4 seconds until the display shows the screen at left.
ENTER MENU CODE 600	Use the arrow keys to log in the **Boiler Menu Access Code - 600**. Press **ENTER** to confirm the code and access the **Boiler Setting Program** navigation menu.

Table 14 - Boiler Setting Access

Boiler Setting Program Navigation

Once the code is confirmed, the user can start to set the **Boiler Settings**. Use the arrow keys on the display to navigate through the **Boiler Settings**. A blinking setting indicates the setting can be changed. To change a setting, press **ENTER**. Boiler settings can be increased by pressing **^** and decreased by pressing **v** on the display. When done, press **ENTER**. The setting will stop blinking and the user can move on to next setting. Press **RESET** to exit programming and store settings. Listed below are the boiler settings that can be programmed into the control.

Screen	Description
CENTRAL HEAT 180 °F	Allows the user to adjust the boiler set point from 50F to 190°F (Factory Default 180°F).
CENTRAL DIFF SET 30 °F	Adjusts the boiler differential set point from 5°F to 30°F (Factory Default 30°F).
DHW SETPOINT 119 °F	Adjusts the indirect tank set point from 70°F to 185°F (Factory Default 119°F).
DHW DIFF SETPOINT 7 °F	Adjusts the DHW differential set point from 1°F to 30°F (Factory Default 7°F).
TEMP DISPLAY C OR F °F	Adjusts the temperature measurement in F = Fahrenheit to C = Celsius (Default is Fahrenheit).

Table 15 - Boiler Setting Program Navigation

Clock Settings

(**NOTE:** The clock will reset if the boiler is powered off for more than a week.)

Screen	Description
CLOCK MODE (12/24) 08/28/2009 Fr 9:42A	Changes the clock from 12 hour mode (8:45 PM) to 24 hour mode (20:45). To change to 24 hour mode, press **ENTER**. The letter (A or P) after the time will blink. Press the up or down arrow key once and the letter will disappear. Press **ENTER** to save the new setting.
CLOCK HOUR 08/28/2009 Fr 10:01A	Allows the user to adjust the hour setting.
CLOCK MINUTE 08/28/2009 Fr 10:01A	Adjusts the minute setting.
CLOCK DAY OF WEEK 08/28/2009 Fr 10:01A	Adjusts the day of the week.
CLOCK DATE MODE 08/28/2009 Fr 10:01A	Allows the user to switch to European date format (2009/08/28) from US format (08/28/2009).
CLOCK YEAR 08/28/2009 Fr 10:01A	Adjusts the year setting.
CLOCK MONTH 08/28/2009 Fr 10:01A	Adjusts the month setting.
CLOCK DATE 08/28/2009 Fr 10:01A	The clock is set.

Table 16 - Clock Setting Screens

NOTE: The internal clock does not adjust for daylight savings time and requires manual adjustment.

E. Programming the System Setting

System Setting Program Access

Note: Programming the boiler control is not possible when the boiler is firing. Make sure any input which can create a demand on the boiler, such as the tank thermostat, is turned off, so the boiler will remain idle to allow programming.

Screen	Description
ENTER MENU CODE 000	To access the boiler setting program, press and hold **ENTER** for 4 seconds until the display shows the screen at left.
ENTER MENU CODE 925	Use the arrow keys to log in the **Boiler Menu Access Code - 925**. Press **ENTER** to confirm the code and access the **System Setting Program** navigation menu.

Table 17 - System Setting Access

F. System Setting Program Navigation

Once the **System Menu Access Code** is confirmed, the user can begin to set the system setting menu. Use the **< >** keys on the display to navigate through the System Settings. To change a setting, press **ENTER**. System settings can be **increased** by pressing **^** and **decreased** by pressing **v** on the display. When done, press **ENTER**. The setting will stop blinking and you can move on to next setting. Press **RESET** to exit programming and store settings. Listed below are the boiler settings that can be programmed into the control.

Screen	Description
Function 1	**Factory Program Mode**
MODE INDIRECT 1	This indicates that the control is configured correctly. Do not change this setting.
Function 3	**DHW Tank Max Temp**
DHW TANK MAX TEMP 180 °F 3	This is the maximum temperature that can be selected in boiler settings for the DHW indirect tank. Factory Default is 180°F. (Range: 95°F to 180°F)

Screen	Description
Function 6	**DHW Post Pump Time**
DHW POST PUMP TIME 0 MINUTES 6	The indirect pump has the ability to post purge energy from the boiler to run the pump after the set point has been achieved. Please note that running the pump for a time greater than 5 minutes may cause tank energy to be released back to the boiler heat exchanger. Factory Default of 0 Minutes. (Range: 0 – 10 minutes)
Function 7	**Warm Weather Shutoff**
WARM WEATHER OFF 68 °F 7	When used with an outdoor sensor, warm weather shut down will disable the boiler if the programmed outdoor temperature is exceeded. Default: 68°F (Range: 41°F to 122°F).
Function 8	**Min Outdoor Temp**
MIN OUTDOOR TEMP 5 °F 8	Not applicable on this product.
Function 9	**Max Supply Temp**
MAX SUPPLY TEMP 190 °F 9	Sets the maximum design supply temperature based on the minimum outdoor design temperature. Default: 190°F (Range: 77°F to 190°F).
Function 10	**Max Outdoor Temp**
MAX OUTDOOR TEMP 68 °F 10	Sets the maximum outdoor design temperature for the system design. Default: 68°F (Range 32°F to 190°F).
Function 11	**Min Supply Temp**
MIN SUPPLY TEMP 95 °F 11	Sets the design supply water temperature based on the maximum outdoor design temperature. Default: 95°F (Range: 32°F to 190°F).
Function 12	**Min Boiler Temp**
MIN BOILER TEMP 68 °F 12	Sets the design minimum heat curve temperature for central heat. Default: 68°F (Range: 32°F to 190°F).
Function 13	**CH Post Pump Time**
CH POST PUMP TIME 0 MINUTES 13	Allows the user to set the boiler pump post purge time once the thermostat is satisfied. Default: 0 minutes (Range: 0 – 10 minutes).
Function 14	**DHW Priority**
DHW PRIORITY 30 MINUTES 14	Allows the user to set the maximum run time for the indirect fired water heater and the minimum run time for central heating. Default: 30 minutes (Range: 0 – 60 minutes).
Function 15	**Cascade Address**
CASCADE ADDRESS 0 15	Bus addressing boilers (maximum boilers allowed 8 in a cascade system). Master Boiler address is 0 and Following Boilers are addressed 1 thru 7. Default: 0 (Range: 0 – 8). NOTE: DO NOT USE ADDRESS 8.

Function 16	**Optional Inputs**
OPTIONAL INPUT RETURN SEN 16	Allows the user to select optional inputs to control or monitor the system. Default: RETURN (Range: Off / Booster Board / 0-10 Volt / DHW Sensor / Return Sen).
Function 17	**0-10 Volt Function**
0-10 VOLT FUNCTION TEMPERATURE 17	Control boiler modulation through temperature control. Factory Default = Temperature (Range: Temperature or Fan Speed).
Function 18	**Step Modulation Mode**
STEP MODULATE MODE ON 18	Allows the user to turn ON the step modulation, which regulates burner output in six steps at one minute intervals. Step modulation will start at the last modulation rate of the boiler and work up one minute at a time. Default: OFF (Selection: OFF or ON).
Function 19	**Boiler DHW Temp**
BOILER SUPPLY DHW 180 °F 19	Allows the user to program the boiler supply water temperature to the indirect heat exchanger during a demand cycle. Default: 180°F (Range: 119°F to 190°F).
Function 20	**Water Safety Input**
WATER SAFETY INPUT WATER PRESSURE 20	The user can select various water safety inputs used in the boiler system. Default: Flow Switch (Range: None / Low Water Cut Off / Flow Switch / Water Pressure).
Function 21	**Error Outdoor Sensor**
ERROR OUTD SENSOR OFF 21	Allows the user to set the control to display an error message if an outdoor sensor is open or shorted. NOTE: This error does not stop the boiler from running. Factory Default: ON (Range: ON / OFF / PHOEN ON).
Function 22	**Adjust Boiler Output %**
ADJ BOILER OUTPUT 100% 22	Adjusts the boiler output down from 100% to 50%. Factory Default: 100%. (Range: 100% – 50%)
Function 23	**Cascade Mode**
CASCADE MODE VISION 3 23	Allows the user to select cascade mode. Factory Default: Vision 3 (Range: 926 Boilers / Vision 3).
Function 24	**Cascade Rotation**
CASCADE ROTATION 48 HOURS 24	Sets the amount of hours before the first boiler in the cascade firing rotation will be changed. NOTE: If this is set to 0, the firing order of the boilers will not rotate. Default: 48 hours (Range: 0 – 240 hours).
Function 25	**Cascade DHW Mode**
NOT USED NOT USED 25	Not applicable on this product.

Screen	Description
Function 26	**System Freeze Protection**
SYS FREEZE PROT PROTECT OFF 26	**NOTE:** This parameter is only present if the boiler is a cascade master. Allows the user to set the freeze protection when a system pump is used. Factory Default: OFF. Selection of temperature activates freeze protection. (Range: OFF, -40°F – 104°F).
Function 27	**Error System Sensor**
ERROR SYSTEM SENS ON 27	Sets the control to display an error message if the system sensor is open or shorted. NOTE: This error does not stop the boiler (or boilers) from running. Factory Default: ON (Range: ON / OFF).
Function 28	**Freeze Protection**
FREEZE PROTECTION ON 28	Allows the user to set freeze protection on the boiler. Factory Default: ON (Range: ON / OFF).
Function 29	**DHW Modulation Mode**
DHW MODULATE MODE NORMAL MOD 29	This parameter controls how the boiler modulates for a DHW demand. In NORMAL MOD mode, the boiler will modulate down from high fire when there is a DHW demand. In LOW MOD mode, the boiler will modulate up from low fire when there is a DHW demand. This mode is useful to minimize short cycling when a large boiler and small indirect tank are used together. Factory Default: NORMAL MOD (Range: NORMAL MOD / LOW MOD).
Function 30	**Extra Boiler Mode**
EXTRA BOILER MODE OFF 30	Allows for a non HTP boiler to be controlled when the cascade output has risen above the percent of the cascade firing rate set in this parameter. Factory Default: Off (Range: 50% - 100%).
Function 31	**System Sensor Mode**
SYSTEM SENSOR MODE OFF 31	Suppresses the 'NO FOLLOWER' display message if the boiler is used as a cascade master boiler with no follower boilers connected. Factory Default: OFF (Range: ON / OFF).
Function 32	**Service Schedule**
SERVICE SCHEDULE OFF 32	Selects a service date or time based on the boiler run hours to program the boiler maintenance schedule. Factory Default: OFF (Range: Date or Run Hours). NOTE: Without setting this function, Functions 33/34/35/36 will not display.
Function 37	**Modbus Mode**
MODBUS MODE OFF 37	Enables Modbus Mode on the appliance. Factory Default: OFF (Range: OFF, ON, AUTO). NOTE: Turning Modbus Mode "ON" will open a number of additional parameters to customize Modbus installation. See Modbus Instructions (lp-372) for details. NOTE: Turning this Mode "ON" without a connected and powered Modbus communication adapter (p/n 7350P-629) will result in improper appliance operation. Service calls associated with this ARE NOT covered by warranty.

Table 18 - System Setting Program Navigation

NOTE: For the following functions, you must have your maintenance function turned on.

To change these functions, press **ENTER**. The left most digit will begin to blink. Use the **^** or **v** arrows to change the digit. Use the **< >** arrow keys to switch between digits. When you've made your selection, press **ENTER** again.

Screen	Description
Function 33	**Year**
SERVICE SCHEDULE YEAR 00/00/2000 33	Allows the user to set the year of the next service reminder.
	Hours
SERVICE SCHEDULE 10000's ⓪⓪0000 33	Allows the user to set the left two digits of the amount of run hours before next service reminder.
Function 34	**Month**
SERVICE SCHEDULE MONTH 00/00/2000 34	If the date function was selected, this function programs the month. If you selected the run hour function, you will need to program 10,000 hours, if required.
	Hours
SERVICE SCHEDULE 10000's 00⓪⓪00 34	Allows the user to set the middle two digits of the amount of run hours before next service reminder.
Function 35	**Day**
SERVICE SCHEDULE DAY 00/00/2000 35	Sets the day of next service reminder.
	Hours
SERVICE SCHEDULE 10000's 0000⓪⓪ 35	Sets the two right digits of the amount of run hours for the next service reminder.
Function 36	**Telephone**
TELEPHONE # 000 000 0000 36	Allows the user to input a telephone number that will display when maintenance is required.

Table 19 - Maintenance Reminder Function Screens

G. Resetting the Maintenance Schedule

When the system control flashes MAINTENANCE REQUIRED, it is advisable that you call for service. After the service is performed, reset the schedule for the next required service by using the following steps.

Press **ENTER** on the display for 3 seconds. The Menu code will

appear as 000. This does not change. Press **ENTER** again. SERVICE SCHEDULE RESET will be displayed. Using the **>** key scroll to the selection of year or hours. Press **ENTER** to reset the selected Service Schedule. To change a setting, press **ENTER**. Press the **^** and **v** keys to make adjustments. Press **ENTER** when reset is complete.

Part 10 - Start-Up Procedures for the Installer

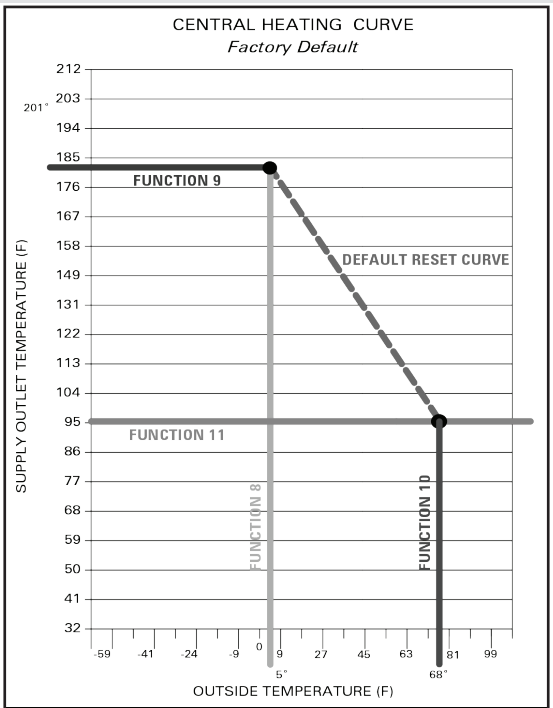

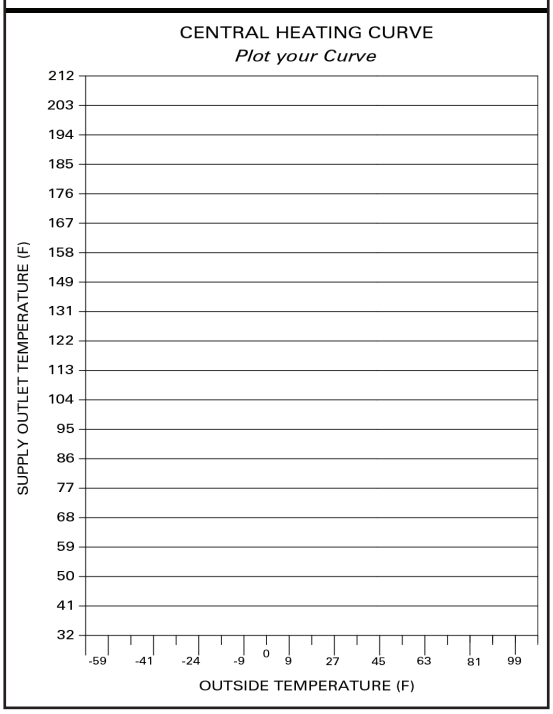

Table 20 - Heating Curve - NOTE: The user can adjust the heat curve down by lowering the central heating temperature.

A. Boiler Control Status Menu

The boiler control also has the ability to review system status. To access the status screens, press **>**. Once the first value is displayed, press **^** and **v** to scroll through additional information. At any point press **RESET** to exit the status screens.

Screen	Description
SUPPLY SEN 180°F RETURN SEN 150°F	This is the first screen that appears after pressing **>**, and shows the actual temperatures measured by the supply and return sensors. NOTE: If the boiler is configured to use a 0 – 10 volt input, the return sensor is disabled and the second line of the display will be blank.
Press v once.	
CH SET 180°F SUPPLY SEN 122°F	The current central heating temperature set point is displayed on the top line. NOTE: This temperature set point may vary from what was set in the boiler settings if an outdoor sensor is used. The actual temperature measured by the supply sensor is displayed on the bottom line.
Press v once.	
CH DEMAND OFF SUPPLY SEN 122°F	This screen displays the central heat demand set for the cascade system.
Press v once.	
0-10 SIGNL ON *	Shows if 0-10 volt is enabled.
Press v once.	**This screen appears only when the boiler is set as a Master Boiler.**
CAS SET 190°F SYSTEM 112°F	This screen displays the cascade set point (maximum 190°F) on the top line. The system sensor reading is on the second line. The control will cascade the boilers up to this set point depending on demand.
Press v once.	
DHW SET 119°F DHW 117°F	Displays the current tank temperature set point on the top line. The actual temperature measured by the tank or return sensor (HTP 7250P-325) is displayed on the bottom line. If a mechanical aquastat is used in place of the recommended sensor, the second line will display 'OFF' in place of the temperature if the aquastat measures close to its set temperature, or 'ON' if the aquastat temperature is too low.
Press v once.	
OUTDOOR 11°F FLUE 95°F	The current outdoor temperature is displayed on the top line. If there is no outdoor sensor connected to the boiler, this line will display 'OFF' in place of the temperature. If the outdoor sensor is shorted, this line will display 'ON' in place of the temperature. The second line displays the current flue temperature of the boiler.
Press v once.	
FLAME 0.0uA FAN SPEED 3497 RPM	This screen displays boiler flame current on the top line. The second line displays boiler fan speed.
Press v once.	

0-10 V 0.0V BOILER	The top line displays the voltage on the optional input. This voltage is only relevant if an external 0-10 volt signal is being used to control the boiler.
Press v once.	
BUS COMM NO CONN	This display shows the status of the communication bus between multiple boilers. If in a single boiler configuration, the display will show 'NO CONN'. In a multiple boiler configuration, if this is the Master Boiler and other boilers are connected to the communication bus and powered, this screen will show the address of each boiler connected to the bus.
Press v once.	
POWER ON 0H CH ON 0H	The top line indicates the amount of hours the boiler has been powered over its life. The second line indicates how many hours the burner has been on for central heat demand over its life.
Press v once.	
DHW ON 0H GOOD IGNIT 1X	The top line indicates the hours the burner has been on for hot water demand over the boiler's life. The second line indicates how many times the burner has successfully ignited over the boiler's life.
Press v once.	
SYS CH ON 0H SYS DHW ON 0H	This screen displays how many hours the boiler has run to meet central heat and DHW demand.

Table 21 - Boiler Control Status Menu Screens

The next ten screens display the last ten boiler lockout faults. Press **v** to scroll through the faults from most recent to oldest.

Screen	Description
FAULT HISTORY 1 07/27/2009 Mo 5:19A	This screen displays the most recent boiler control lockout fault. The top line will alternate between the words 'FAULT HISTORY' and the fault code encountered. The bottom line displays the date and time the fault occurred.
Press v once.	
FAULT HISTORY 2 08/28/2009 Fr 5:19A	This screen displays the second oldest boiler control lockout fault. The top line will alternate between the words 'FAULT HISTORY' and the actual fault encountered. The bottom line will display the date and time that the fault occurred.
Press v once.	
FAULT HISTORY 3 08/28/2009 Fr 5:19A	This screen displays the third oldest boiler control lockout fault. The top line will alternate between the words 'FAULT HISTORY' and the actual fault encountered. The bottom line will display the date and time that the fault occurred.
Press v once.	
FAULT HISTORY 4 08/28/2009 Fr 5:19A	This screen displays the fourth oldest boiler control lockout fault. The top line will alternate between the words 'FAULT HISTORY' and the actual fault encountered. The bottom line will display the date and time that the fault occurred.
Press v once.	
FAULT HISTORY 5 08/28/2009 Fr 5:19A	This screen displays the fifth oldest boiler control lockout fault. The top line will alternate between the words 'FAULT HISTORY' and the actual fault encountered. The bottom line will display the date and time that the fault occurred.
Press v once.	
FAULT HISTORY 6 08/28/2009 Fr 5:19A	This screen displays the sixth oldest boiler control lockout fault. The top line will alternate between the words 'FAULT HISTORY' and the actual fault encountered. The bottom line will display the date and time that the fault occurred.
Press v once.	
FAULT HISTORY 7 08/28/2009 Fr 5:19A	This screen displays the seventh oldest boiler control lockout fault. The top line will alternate between the words 'FAULT HISTORY' and the actual fault encountered. The bottom line will display the date and time that the fault occurred.
Press v once.	
FAULT HISTORY 8 08/28/2009 Fr 5:19A	This screen displays the eighth oldest boiler control lockout fault. The top line will alternate between the words 'FAULT HISTORY' and the actual fault encountered. The bottom line will display the date and time that the fault occurred.
Press v once.	
FAULT HISTORY 9 08/28/2009 Fr 5:19A	This screen displays the ninth oldest boiler control lockout fault. The top line will alternate between the words 'FAULT HISTORY' and the actual fault encountered. The bottom line will display the date and time that the fault occurred.
FAULT HISTORY 10 08/28/2009 Fr 5:19A	This screen displays the tenth oldest boiler control lockout fault. The top line will alternate between the words 'FAULT HISTORY' and the actual fault encountered. The bottom line will display the date and time that the fault occurred.

Table 22 - Boiler Fault Screens

B. Cascade Menu

This menu is accessed by pressing **<** at the default menu or **>** at the status menu.

Screen	Description
CASCADE MASTER READY SYS PUMP OFF	This screen displays when the boiler is configured as a Cascade Master and the system is ready to accept a demand for heat. The second line indicates the cascade system pump output status. This screen alternates with the default screen every 5 seconds or can be accessed by pressing the **<** key from the default screen.
CASCADE NO FOLLOWER SYS PUMP OFF	This screen displays when the boiler is configured as a Master Boiler and there are no connected follower boilers, or the follower boilers are not powered. The second line indicates cascade system pump output status. This screen alternates with the default screen every 5 seconds or can be accessed by pressing the **<** key from the default screen.
CASCADE NO SENSOR SYS PUMP OFF	This screen displays when the boiler is configured as a Master Boiler and there is no system temperature sensor connected or the system sensor is defective. The cascade system will still function in this situation with reduced efficiency. All boilers will run simultaneously rather than in a staged fashion. The second line indicates cascade system pump output status. This screen will alternate with the default screen every 5 seconds or can be accessed by pressing the **<** key from the default screen.
CASCADE TT 0123 567 SYS PUMP ON 12:47P	This screen displays information about cascade status. The TT in the center of the top line shows that cascade demand is coming from the TT contact being closed. You may also see DHW if the demand is from a DHW sensor, or 0-10 if the demand is from a 0-10 volt input. The following numbers show which boiler addresses are currently communicating to the master. If a boiler address is not used or communicating, the number will not display. In the example to the left, boiler address #4 is not communicating. When a boiler in the system is firing, its address number will alternate with a '.' to signify it is firing. The bottom line shows the status of the system pump output contacts.
Press v once.	
CASCADE PWR 100% PRESENT 01234567	This screen displays overall cascade power output. The range of this value is the number of boilers communicating with the Master x 100. For example, if 8 boilers are connected and firing, the maximum cascade power is 800%. The second line shows which boiler addresses are communicating with the Master.
Press v once.	
CASCADE SYST 118°F CASCADE SET 190°F	This screen displays current system temperature sensor reading on the top line and the cascade system temperature setting on the bottom.
Press v once.	
BOILER 0 100% BOILER 1 56%	This screen displays the current cascade power demand output on a per connected boiler basis for boilers addressed as 0 and 1. In the example, boiler 0 is being commanded to fire at 100% and boiler 1 at 56%. If this were a 2 boiler system, the 'CASCADE PWR' screen above would read 156%.
Press v once.	
BOILER 2 0% BOILER 3 0%	This screen displays the current cascade power demand output on a per connected boiler basis for boilers addressed as 2 and 3.
Press v once.	
BOILER 4 0% BOILER 5 0%	This screen displays the current cascade power demand output on a per connected boiler basis for boilers addressed as 4 and 5.
Press v once.	
BOILER 6 0% BOILER 7 0%	This screen displays the current cascade power demand output on a per connected boiler basis for boilers addressed as 6 and 7.

Table 23 - Cascade Menu

C. Boiler Test Mode

This function is intended to simplify gas adjustment. The following tables include recommended combustion settings by fuel type and boiler fan speeds. Automatic modulation does not take place while the controller is in Test Mode. However, the boilers will modulate down if the program set point is reached while running in Test Mode. It is recommended to enter Test Mode with the largest load possible to create such a heat demand that Test Mode will not be interrupted. To enter Test Mode press **^** and **ENTER** simultaneously.

NOTE: The boiler will automatically exit Test Mode after 20 minutes of operation.

To leave Test Mode press **^** and **v** simultaneously.

```
SERVICE RUN        3400 RPM
PUMP ON              4:49P
```

Combustion Settings on All Models						
Fan Speed	Natural Gas (NG)			Propane (LP)		
	Low	Ignition	High	Low	Ignition	High
Carbon Monoxide (CO) PPM	5-50	60-100	≤150	5-50	60-100	≤150
Carbon Dioxide (CO_2) %	8-10	8 1/2-10 1/2			9-10 1/2	9 1/2-11

Table 24 - Combustion Settings - All Models

Fan Speeds			
BTU	Ignition	Min	Max
55,000	3800	1700	4050
80,000		1850	5000
110,000			6050
155,000	4100		5400
199,000	3800	1750	6050
285,000	4600	1800	
399,000	4200	2500	6950

Table 25 - Fan Speeds

Part 11 - Troubleshooting

A. Boiler Error and Fault Codes

If any of the sensors detect an abnormal condition, or an internal component fails during the operation of the boiler, the display may show an error message and error code. This message and code may be the result of a temporary condition, in which case the display will revert to its normal readout when the condition is corrected, or it may be a condition that the controller has evaluated as not safe to restart the boiler. In this case, the boiler control will be locked out, the red FAULT light will be lit, and the message "LOCKOUT" will be displayed on the readout in the lower line.

The boiler will not start until a qualified technician has repaired the boiler and pressed the RESET button for more than 1 second.

If there is an error message displayed on the readout, and the message "LOCKOUT" is not displayed and the FAULT light is not lit, then the message is the result of a temporary condition and will disappear when the problem corrects itself.

IMPORTANT NOTE: If you see error messages on your display readout, call a technician immediately, since the message may indicate a more serious problem will occur soon.

B. Boiler Error

The controller will display an error code and message when an error condition occurs. These error codes, descriptions, and recommended corrective actions are described in Section D.

C. Boiler Fault

1. The controller will illuminate the red "FAULT" indication light and display a fault code and message when a fault condition occurs. The alarm output will also activate. Most fault conditions cause the CH pump to run in an attempt to cool the boiler.
2. Note the displayed fault code and refer to Section D for an explanation of the message along with several suggestions for corrective actions.
3. Press **RESET** to clear the fault and resume operation. Be sure to observe the operation of the unit for a period of time to assure correct operation and no reoccurrence of fault message.

⚠ WARNING

When servicing or replacing components that are in direct contact with boiler water, be certain that:

- There is no pressure in the boiler. (Pull the release on the relief valve. Do not depend on the pressure gauge reading.
- The boiler water is not hot.
- The electrical power is disconnected.
- The gas is shut off.

Failure to make these checks could result in substantial property damage, serious personal injury, or death.

DO NOT USE THIS APPLIANCE IF ANY PART HAS BEEN SUBMERGED IN WATER. Immediately call a qualified service technician. The appliance MUST BE replaced if it has been submerged. Attempting to operate an appliance that has been submerged could create numerous harmful conditions, such as a potential gas leakage causing a fire and/or explosion, or the release of mold, bacteria, or other harmful particulates into the air. Operating a previously submerged appliance could result in property damage, severe personal injury, or death.

NOTE: Appliance damage due to flood or submersion is considered an Act of God, and IS NOT covered under product warranty.

If overheating occurs or the gas supply fails to shut off, do not turn off electrical power to the circulating pump. This may aggravate the problem and increase the likelihood of boiler damage. Instead, shut off the gas supply to the boiler at the gas service valve. Failure to do so may result in property damage, personal injury, or death.

⚠ CAUTION

Label all wires prior to disconnecting them when servicing the boiler. Wiring errors can cause improper and dangerous operation. Failure to follow these instructions may result in property damage or personal injury.

NOTE: If system return temperatures are maintained below the dew point, condensation will form on the inside of the boiler cabinet and cause some internal sheet metal components to rust.

D. User Interface Display

Cascade Control Fault Codes

Screen	Description	Possible Remedy
SYS SUPPLY SENSOR PUMP OFF E03	E03 indicates a problem with the system sensor circuit. The circuit could be open or shorted. Possible reasons for this error are: There is no system sensor connected to the Master Boiler. The system sensor is faulty. There is a short circuit in the system sensor wiring; possibly from a staple placed through the wire, or damage to the wire causing both conductors to touch. The system sensor wiring is open due to defect or damage.	Disconnect the system sensor from the wiring and measure it's resistance. Compare the measured resistance to the table in this manual to see if it corresponds to the temperature of the sensor. If the resistance does not agree with the sensor, replace the sensor. If the sensor is OK, disconnect the sensor wiring from both the boiler and the sensor and check continuity using an ohmmeter. Repair or replace as necessary. If this error is present, the boilers in the cascaded group will run and ignite simultaneously when there is a heat demand. Each boiler will modulate to maintain set point temperature on its own supply sensor. This code automatically resets when repair is complete. This code will not display if system setting function ERROR SYSTEM SENS is set to OFF.
TEMPER BLOCKING PUMP ON TT	TT indicates there is a demand for heat on the boiler, the pump is powered on, and the supply sensor temperature is too high for the boiler to ignite. This occurs because the water temperature measured by the supply sensor is higher than the boiler temperature – ignition diff setting.	This message will stay present until the water temperature measured by the supply sensor is less than the boiler temperature – ignition diff setting.
TEMPER BLOCKING PUMP ON DHW	This display indicates a temporary hold on the burner. There is a demand on the boiler from the DHW circuit for heat, the pump is powered on, but the boiler supply sensor indicates that the water temperature is too high to ignite. This is a temporary hold on the burner only and all other functions will remain functioning properly.	This error will clear itself when either the boiler supply temperature drops below the BOILER SUPPLY minus boiler supply differential (5°F) or DHW SETPOINT is satisfied and no longer calls for heat.
LOW WATER PRESS PUMP OFF PRO	PRO indicates low water pressure in the boiler. This code will reset automatically after the water pressure is high enough for the boiler to run safely. The second line indicates the status of the pump. Note that while the water pressure is low, the pump will be off.	1. Assure that the system pressure is above 10 psig. 2. Check for leaks in the system piping.
HIGH FLUE PRESS FLU PUMP ON	FLU indicates excessive flue pressure. This code resets automatically after the high pressure condition is resolved. The second line indicates pump status.	1. Assure the flue is not blocked. 2. Check the switch wiring by applying a jumper in place of the switch. If the code clears with the jumper in place, REPLACE the flue switch and connect the wires to the new switch BEFORE running boiler.
WARNING: Do not use jumper to remedy an FLU error. Faulty switch MUST be replaced. Failure to follow this instruction could result in serious personal injury or death.		

24 VOLT LOW LOU PUMP ON	LOU indicates the 24 volt power supply on the control is damaged or overloaded. This code resets automatically if it is the result of an overload and the overload condition is removed. The second line indicates the status of the pump. Note that while 24 volt power is low, the pump output will be on.	1. Check line voltage. It must be between 100 and 128 volts. 2. If available, connect a PC and use HTP service software to check the 24v supply display in the lower left corner of the screen. The number displayed here must be greater than 128 and should be no greater than 250. Use this as a troubleshooting guide as you follow the steps below. 3. Remove the 10 pin Molex connector from the customer connection board. If the message clears the problem is with external sensor wiring. Examine the external sensor wiring for shorts to the ground, repairing as necessary. If the message is still present and the boiler is so equipped, disconnect the UL 353 low water cut-off to see if the message clears. Replace the faulty part. Check the low voltage wire harness in boiler for shorts to ground. 4. If a message only occurs when the burner tries to light, check the gas valve for excessive current draw. 5. If a message is present when the low voltage harness is disconnected from the 926 control board, replace the 926 control board.
WATER HIGH TEMP F00 PUMP ON	F00 indicates the water in the boiler has overheated. The boiler will not restart until it cools sufficiently and a technician determines and repairs the cause of overheating and pushes **RESET** on the display. This is a serious safety issue as indicated by the illuminated red light and the word LOCKOUT flashing on the display. During this lockout fault, the pump will be on in an effort to cool the boiler down.	1. Check circulator pump operation. 2. If the circulator pump is running, ensure there is water in the system and that the water is moving through the system as intended. Ensure that all correct ball valves and or zone valves are open or closed as intended. 3. Observe the temperature/pressure gauge. If the water is not too hot and this message is displayed, check the wiring to the water ECO sensor and repair if necessary. If the wiring is ok and this code is still present and the water is not excessively hot, replace the ECO sensor.
FLUE TEMP/WAT LV F01 PUMP ON	F01 indicates that the flue temperature limit switch of the boiler has tripped or that the water level in the boiler is low (this will only occur if the optional UL353 LWCO is installed). This code indicates a serious safety issue. The boiler will not restart until the flue cools down sufficiently or the water level is restored. A technician must repair the cause of the problem and push the RESET button first on the low water cut-off control box, then on the display. This situation is indicated by the red light on the display and the word LOCKOUT flashing on the display. During this lockout fault, the pump will be on as indicated on the second line of the display.	1. If the boiler has a UL353 LWCO, check if the red LED on the LWCO control box is illuminated. If so, correct the low water condition and press the reset button on the LWCO control box to reset the LWCO. The LED should change to green. Press the reset button on the front panel of the boiler to reset the boiler control. 2. Check the flue for obstructions or any sign of damage, especially signs of excessive heat. Repair as necessary. Push the red reset button on the flue temperature switch located on the flue inside the rear access door of the boiler. NOTE: The switch temperature must be less than 90°F to reset. Press the reset button on the display. Run the boiler and check the flue temperature by using both an external thermometer in the flue pipe and the flue temperature display in the status screens. If the flue temperature is within specs and the switch trips, replace the switch. If the flue temperature is excessive, check and adjust combustion controls on the boiler. If the problem persists, inspect the target wall in the combustion chamber and replace it if cracked or damaged.
SUPPLY SENSOR F02 PUMP ON	F02 indicates the supply temperature sensor of the boiler has failed. The boiler will not restart until a technician replaces the sensor and pushes **RESET** on the display. This is a serious safety issue as indicated by the illuminated red light and the word LOCKOUT flashing on the display. During this lockout fault, the pump will be on.	1. Check the electrical connection to the thermistor on the outlet manifold. Verify 5 VDC by checking the Molex connector. If there is no 5 VDC, check the harness. If harness is OK, replace the control. Verify thermistor values by referencing chart in this manual. 2. Replace thermistor if necessary. **NOTE:** The boiler will reset automatically once the fault is corrected.

RETURN SENSOR F03 PUMP ON	F03 indicates the return temperature sensor of the boiler has failed. The boiler will not restart until a technician replaces the sensor and pushes **RESET** on the display. This is a serious safety issue as indicated by the illuminated red light and the word LOCKOUT flashing on the display. During this lockout fault, the pump will be on.	1. Check circulator pump operation. 2. Ensure adequate flow through the boiler by accessing the status menu and determining there is less than a 50°F rise from the return thermistor to the supply thermistor. 3. Troubleshoot thermistor by following the steps in F02.
FLUE SENSOR F04 PUMP ON	F04 indicates that the flue temperature sensor of the boiler has failed. The boiler will not restart until a technician replaces the sensor and pushes **RESET** on the display. This is a serious safety issue as indicated by the illuminated red light and the word LOCKOUT flashing on the display. During this lockout fault, the pump will be on.	Inspect the flue sensor for physical damage or corrosion and replace it if necessary. Check the electrical connection to the flue sensor and repair as necessary. Measure the resistance of the sensor and refer to the sensor resistance table in this manual. The temperature on the chart should be close to the temperature in the flue. If not, replace the flue sensor.
SUPPLY TEMP HIGH F05 PUMP ON	F05 indicates the boiler supply temperature is excessive. When accompanied by the red FAULT light and LOCKOUT flashing on the display, this code indicates the supply sensor temperature has exceeded 199°F and a serious safety issue exists. The boiler will not restart until a technician determines and repairs the cause of excessive temperature and pushes **RESET** on the display. If the FAULT light is not illuminated and this message is displayed, the supply temperature of the boiler is at or above 199°F. The message will clear automatically when the temperature drops below 194°F. During the time that this fault is displayed, the pump will be on.	1. Check circulator pump operation. 2. Ensure adequate flow through the boiler by accessing the status menu and determining there is less than a 50°F rise from the return thermistor to the supply thermistor. 3. Check the direction of flow off the boiler circulator. (See Applications in this manual.) 4. Troubleshoot the thermistor by following steps in F02.
RETURN TEMP HIGH F06 PUMP ON	This display indicates that the boiler return temperature is excessive. When accompanied by the red FAULT light and LOCKOUT flashing on the display, this code indicates that the return sensor temperature has exceeded 199°F and a serious safety issue exists. The boiler will not restart until a technician determines and repairs the cause of excessive temperature and pushes **RESET** on the display. If the red FAULT light is not illuminated and this message is displayed, then the return temperature of the boiler is at or above 199°F. The message will clear automatically when the temperature drops below 194°F. During the time that this message or lockout fault is displayed, the pump will be on.	1. Check circulator pump operation. 2. Ensure adequate flow through the boiler by accessing the status menu and determining there is less than a 50°F rise from the return thermistor to the supply thermistor. 3. Check the direction of flow on boiler circulator. (See Applications in this manual.) 4. Troubleshoot thermistor by following steps in F02.

NO FLAME ON IGN F09 PUMP ON	The boiler tried to ignite four times during one heat call and failed. This is a serious safety issue as indicated by the illuminated red light and the word LOCKOUT flashing on the display. The boiler will not restart until a technician determines and repairs the cause of ignition failure and pushes **RESET** on the display. During this lockout fault, the pump will remain on.	1. Watch the igniter through the observation window. 2. If there is no spark, check the spark electrode for the proper .156" (3.96 mm) gap. See below. 3. Remove any corrosion from the spark electrode and flame rectifier probe. 4. If there is a spark but no flame, check the gas supply to the boiler. 5. If there is a flame, check the flame sensor. 6. Check any flue blockage or condensate blocks. 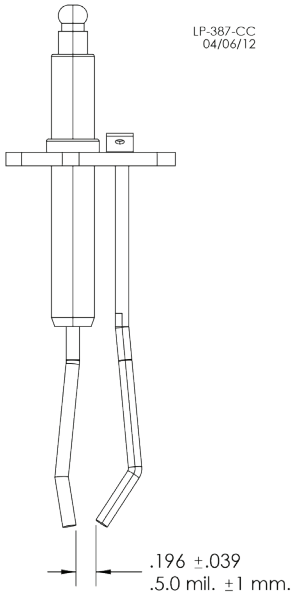
FLAME LOSS F10 PUMP ON	The flame was lost 3 times while the boiler was firing during 1 demand call. This is a serious safety issue as indicated by the illuminated red light and the word LOCKOUT flashing on the display. The boiler will not restart until a technician determines and repairs the cause of flame loss and pushes **RESET** on the display. During this lockout fault, the pump will be on.	1. Monitor gas pressure to the unit while in operation. 2. Assure the flame is stable when lit. 3. Check if the display readout changes from "GAS VALVE ON" to "RUN" within a few seconds of boiler ignites. 4. Check the FLAME signal on the display. It should be above 1.0 when the boiler is firing. 5. If the signal reads less than 1 microampere, clean the flame rectifier and spark probe. 6. If the problem persists and the 'FLAME" signal is still less than 1.0, replace the flame probe and spark igniter probe. 7. The flame signal should be steady after the boiler has been firing for 1 minute and is normally at 5.0 to 9.0. If the flame signal is not steady, disassemble the burner door and check the burner and its sealing gaskets.
FALSE FLAME SIG F11 PUMP ON	There is flame when the control is not telling the boiler to run. This is a serious safety issue as indicated by the illuminated red light and the word LOCKOUT flashing on the display. The boiler will not restart until a technician determines and repairs the cause and pushes **RESET** on the display. During this lockout fault, the pump will be on.	1. Look into window. If there is flame, turn the gas off to the unit at the service valve and replace the gas valve. 2. If the flame signal on the status menu is greater than 1.0 when the burner is not lit, replace the spark ignitor and the flame rectification probe. 3. If the flame signal is not present after turning off the gas supply, check the gas valve electrical connection. 4. Check for condensate backup. Repair condensate system as necessary. If condensate has partially filled the combustion chamber, the refractory wall may be damaged and should be replaced. 5. Turn the gas on at the service valve after corrective action is taken. 6. If the refractory wall falls against the rectifier probe, it may conduct the signal to ground, giving a false reading.

FAN SPEED ERROR F13 PUMP ON	The fan is not running at the speed determined by the control. Fan speed has been more than 30% faster or slower than the commanded speed for more than 10 seconds. This is a serious safety issue as indicated by the illuminated red light and the word LOCKOUT flashing on the display .This boiler will not restart until a technician determines and repairs the cause and pushes **RESET** on the display. During this lockout fault, the pump will be on.	1. Check the combustion fan wiring. 2. Measure DC voltage from the red fan wire to ground while it is connected to the fan. It should be between 24 and 40 volts. If it is lower than 24 volts, check for excessive external loads connected to the boiler sensor terminals 3. Disconnect the 5 pin plug from the fan and check the voltage on the red wire again. If it is now between 24-40 volts, replace the fan. If it is still below 24 volts replace the boiler control board.
CONDENSATE FULL F20 PUMP OFF	The condensate trap is full. This is a serious safety issue as indicated by the illuminated red light and the word LOCKOUT flashing on the display. The boiler will not restart until a technician determines and repairs the cause and pushes **RESET** on the display. During this lockout fault, the pump will be off.	1. Check condensate lines for obstructions. 2. Check float switch in condensate reservoir. 3. Check wiring from condensate reservoir to 926 control and repair as necessary.
PROGRAM ERROR F31 PUMP OFF	There was an error while programming the control and the memory is corrupt. The boiler control will not function in this state and the pump will be off as indicated on the bottom line. This error only occurs if a technician is programming the control and the programming function fails. The only way to recover from this error is to reprogram the control. If this error occurs at any time other than when a technician is servicing the boiler, the control has failed and must be replaced by a qualified technician.	The control must be reprogrammed. If programming does not solve the problem, the control must be replaced.
CONTROL PROGRAMED PP	The control has been programmed by a technician or the factory. After programming, the control is left in a locked out mode.	Press **RESET** for at least 1 second to use the control.
OUTDOOR SENSOR FOU PUMP ON 1:45P	FOU indicates an issue with the outdoor sensor. It is shorted, damaged, or disconnected from the boiler.	1. Check outdoor sensor connections and wiring. Ensure the sensor and wiring are intact and that the sensor is connected to the boiler. 2. Check the outdoor sensor resistance with an ohmmeter. See Table 27 for correct outdoor sensor resistance. 3. Replace the outdoor sensor.
NOTE: If an outdoor sensor IS NOT used in the installation, enter the System Setting Program Navigation, go to Function 21, and turn the setting from ON to OFF.		
The following blocking codes will block operation until the control determines the situation safe for boiler operation.		
FLUE TEMP HIGH E07 PUMP OFF TIME	E07 indicates the flue sensor temperature is excessive and above 210°F. When E07 is displayed the boiler will not respond to a demand for heat. When the flue temperature decreases below 194°F, the display will return to normal and allow the boiler to respond to a heat demand. The bottom line indicates the status of the pump. The pump will remain off when this error is displayed.	Check the flue for obstructions and any sign of damage, especially signs of excessive heat. Repair as necessary. Run the boiler and check the flue temperature with an external thermometer. If the flue temperature on the thermometer does not agree with the flue temperature displayed in the status menu, inspect the wiring to the flue temperature sensor in the boiler and repair as necessary. If the wiring is intact replace the flue sensor. If the flue temperature is excessive on the status menu and the test thermometer reads the same, check and adjust combustion controls on the boiler. If the problem persists, inspect the target wall in the combustion chamber and replace it if cracked or damaged.
LINE VOLTAGE E19 PUMP OFF	E19 indicates the line voltage frequency is out of range. This could happen if the boiler is being powered from a small gasoline powered generator that is overloaded or not functioning correctly.	Inspect power wiring to the boiler and repair as necessary. If connected to line voltage, notify the power company. If connected to an alternate power source such as a generator or inverter, make sure the line voltage frequency supplied by the device is 60 Hz.

Table 26 - Boiler Error and Fault Codes

Part 12 - Maintenance

A. Procedures

Periodic maintenance should be performed once a year by a qualified service technician to assure that all the equipment is operating safely and efficiently. The owner should make necessary arrangements with a qualified heating contractor for periodic maintenance of the boiler. The installer must also inform the owner that a lack of proper care and maintenance of the boiler may result in a hazardous condition.

⚠ WARNING

BEFORE EACH HEATING SEASON a trained and qualified service technician should perform the inspections as per the boiler inspection and maintenance schedule in this manual. Failure to do so could result in death or serious injury.

The combustion chamber insulation in this product contains ceramic fiber material. Ceramic fibers can be converted to cristobalite in very high temperature applications. The International Agency for Research on Cancer (IARC) has concluded, "Crystalline silica inhaled in the form of quartz or cristobalite from occupational sources is carcinogenic to humans (Group 1)."

- Avoid breathing dust and contact with skin and eyes.
- Use a NIOSH certified dust respirator (N95). This type of respirator is based on the OSHA requirements for cristobalite at the time this document was written. Other types of respirators may be needed depending on job site conditions. Current NIOSH recommendations can be found on the NIOSH website: http://www.cdc.gov/niosh/homepage.html. NIOSH approved respirators, manufacturers, and phone numbers are also listed on this website.
- Wear long-sleeved, loose fitting clothing, gloves, and eye protection.
- Apply enough water to the combustion chamber lining to prevent dust.
- Wash potentially contaminated clothes separately from other clothing. Rinse clothes washer thoroughly.

NIOSH stated First Aid.

- Eye: Irrigate immediately.
- Breathing: Fresh air.

B. Combustion Chamber Coil Cleaning Instructions

*Before beginning this procedure, have on hand the following items:

- a nylon, stainless steel, or brass brush (not steel)
- an FDA approved liquid lime scale remover in a spray bottle
- gloves and eye protection

1. Shut down the boiler by using the following steps:
   a. Turn off power to the boiler. Turn thermostats down to ensure there is no call for heat, or disconnect thermostat connections from terminals. Close the gas valve inside the boiler cabinet. Wait for the boiler to be cool to the touch.
   b. Disconnect the wires plugged into the fan, spark electrode, flame rod, and gas valve.
   c. Disconnect the flexible gas lines from the venture attached to the fan.
   d. Loosen the nuts that hold the burner plate to the heat exchanger.
   e. Remove the combustion assembly.
2. Spray water or solution into the combustion assembly and monitor the flow through the combustion system. Liquid should flow freely through each tube. If there is an obstruction, increase the flow on the tube to force blockage out.
3. Once complete, reinstall the combustion assembly with gaskets and secure nuts. Tighten properly.
   a. Reconnect all wire and piping connections. Once connected, apply power and disconnect the wire harness with the white-blue-red-black wires to run fan and dry combustion assembly. Let fan run for five minutes. When finished, reconnect harness to the fan.
   b. Connect the thermostat wires to the field connection board, or turn up thermostat to fire the combustion system. Check for leaks in the combustion system. Observe operation for 5 to 10 minutes.

If boiler is operating properly, condensate is flowing normally, and no gas leaks are detected, combustion coil cleaning is complete.

⚠ WARNING

Do not use solvents to clean any of the burner components. The components could be damaged, resulting in unreliable or unsafe boiler operation, substantial property damage, severe personal injury, or death.

Outdoor Sensor (7250P-319)		Supply Temperature Sensor (7250P-324) Boiler Sensor (7250P-667) Indirect Sensor (7350P-325)	
Outside Temperature (°F)	Resistance (ohms)	High / Low Temp Sensor Temp. (°F)	Resistance (Ohms)
-22	171800	32	32550
-13	129800	41	25340
-4	98930	50	19870
5	76020	59	15700
14	58880	68	12490
23	45950	77	10000
32	36130	86	8059
41	28600	95	6535
50	22800	104	5330
59	18300	113	4372
68	14770	122	3605
77	12000	131	2989
86	9804	140	2490
95	8054	149	2084
104	6652	158	1753
113	5522	167	1481
		176	1256
		185	1070
		194	915
		202	786
		212	667

Table 27 - Sensor Temperature Resistance

C. Cleaning Water Side of Heat Exchanger

1. Make sure power is turned off to the boiler. Run water through the hot water system to ensure it is below room temperature.

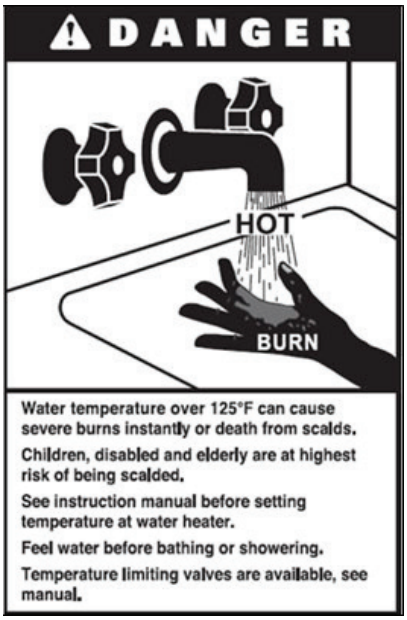

2. Close isolation valves on the return and supply connections to the boilers as shown in the piping diagrams in this manual. Slowly open the ball valves and release pressure into a bucket. Once pressure is released, connect a hose to the water line to flush the boiler. Scale removing solution may be used, but must be approved for use with stainless steel and FDA approved for use in a potable water system.
3. Thoroughly flush the heat exchanger before commissioning the unit back in service.

D. Maintaining the Condensate System

DANGER

The condensate trap assembly MUST BE PROPERLY INSTALLED according to these instructions when operating the boiler. Operating the boiler without the condensate trap assembly will cause flue gases to leak and result in serious personal injury or death.

When servicing is complete, make sure the condensate collector cap is replaced securely. Failure to do so will cause venting issues that will result in serious injury or death.

1. Ensure the boiler is powered off and has had time to cool.
2. Remove the stainless steel lock pin to release the condensate trap. Remove the clear plastic hose from the hose barb. Remove the trap from the drain tube.
3. Remove the bottom cap from the condensate trap.
4. Flush trap with fresh water to remove debris from the trap.

NOTE: Ensure the float moves freely within the trap. If the float does not move, DO NOT reinstall the trap.

5. When the condensate trap is sufficiently clean, reinstall the bottom cap on the trap.

NOTE: Ensure all parts shown in Figure 36, Condensate Detail, are installed with the condensate trap. If any parts are missing, DO NOT reinstall the trap. Replace the entire assembly.

WARNING

Do not install the condensate assembly if a component is lost or missing. Replace the entire assembly. Failure to follow this warning could result in property damage, serious personal injury, or death.

6. Fill the condensate trap with fresh water prior to reassembly on the boiler.

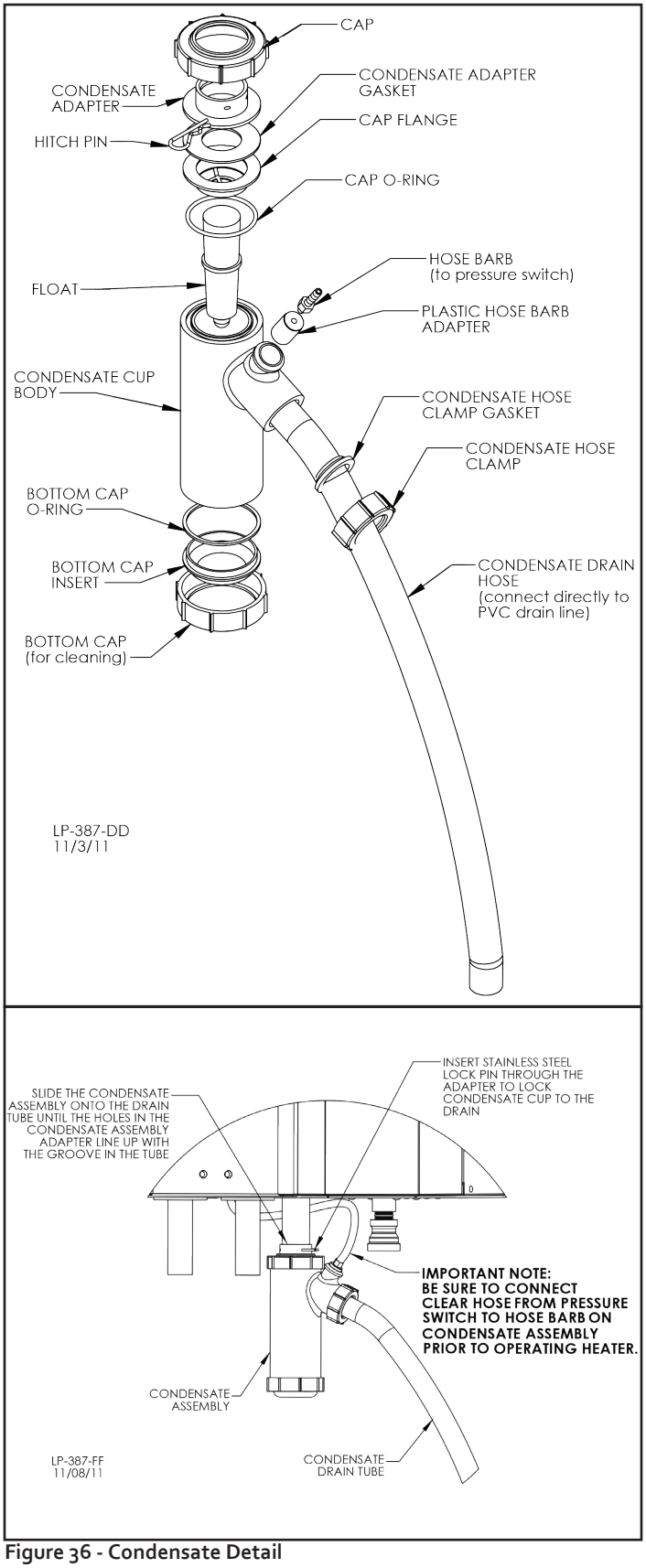

Figure 36 - Condensate Detail

7. Slide the condensate trap adapter onto the drain tube until the holes line up with the groove.
8. Insert the stainless steel hitch pin to lock the condensate adapter to the drain tube.
9. Reattach the clear plastic hose to the hose barb.

WARNING

Do not operate the boiler without the clear hose attached from the hose barb to the pressure switch. Failure to follow this warning could result in property damage, serious personal injury, or death.

10. If a condensate neutralizer kit is installed with the boiler, check the assembly when cleaning the condensate trap, and replenish the limestone chips if necessary. When replacing limestone chips, take care to ensure chips are no smaller than ½" to avoid blockage in condensate piping (for piping details, refer to condensate neutralizer installation instruction.)
11. Check condensate piping for sagging and/or leakage. Repair any sags or leaks before restoring power to the boiler.

CAUTION

It is very important that the condensate piping be no smaller than 1/2". To prevent sagging and maintain pitch, condensate piping should be supported with pipe supports, and pitched ¼" per foot to allow for proper drainage. Failure to maintain proper pipe size and pitch could result in condensate leakage and potential water damage to property.

The condensate line must remain unobstructed, allowing free flow of condensate. If condensate freezes in the line, or if line is obstructed in any other manner, condensate can exit from the tee, resulting in potential water damage to property.

11. If the boiler has a condensate pump, ensure the pump operates properly before considering maintenance complete.

Part 13 - Shutdown

A. Shutdown Procedure

If the burner is not operating, disconnect the electrical supply.
If the burner is operating, lower the set point value to 70°F and wait for the burner to shut off. Continue to wait for the combustion blower to stop, so all latent combustion gases are purged from the system. This should take a maximum of 40 to 90 seconds.

B. Vacation Procedure

If there is danger of freezing, change the set point to 70°F. DO NOT turn off electrical power. If there is no danger of freezing, follow "Shutdown Procedure".

C. Failure to Operate

Should the burner fail to light, the control will perform two more ignition trials prior to entering a lockout state. Note that each subsequent ignition trial will not occur immediately. After a failed ignition trial, the blower must run for approximately 10 seconds to purge the system. Therefore, a time period of approximately 40 to 90 seconds will expire between each ignition trial.
If the burner lights during any one of these three ignition trails, normal operation will resume. If the burner lights, but goes off in about 4 seconds, check the polarity of the wiring. See electrical connection section.
If the burner does not light after the third ignition trial, the control will enter a lockout state. This lockout state indicates that a problem exists with the boiler, the controls, or the gas supply. Under such circumstances, a qualified service technician should be contacted immediately to properly service the boiler and correct the problem. If a technician is not available, depressing and holding the RESET button for more than 1 second will remove the lockout state so additional trials for ignition can be performed. The unit will try to re-light once every 6 minutes.

D. Important Notice

NOTICE

It is extremely important that whenever work is performed on the plumbing system that either:

- The appliance is powered off, or,
- The appliance is valved off and isolated from the plumbing system.

Failure to take these measures could result in a dry-firing condition.

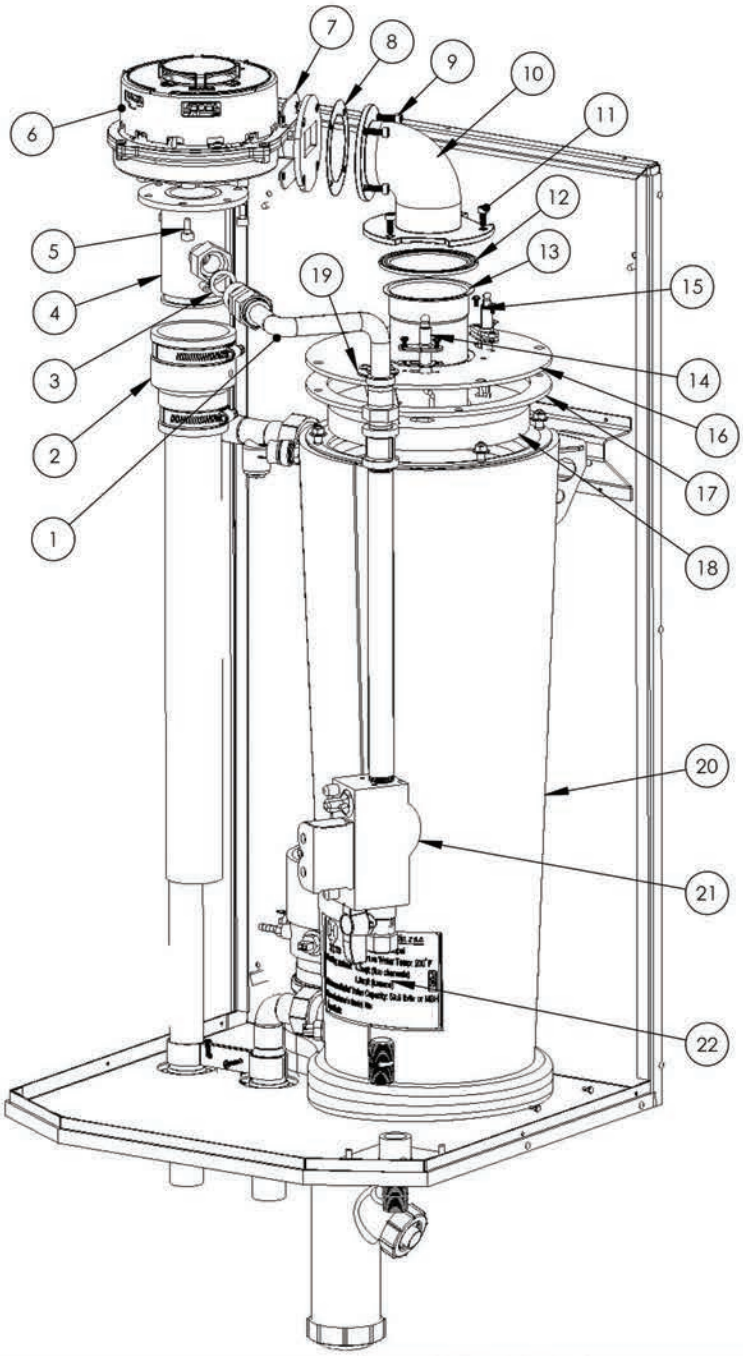

ITEM#	REPLACEMENT PART #	DESCRIPTION
1	7100P-140	FLEXIBLE GAS LINE (w/WASHER)
2	7600P-102	AIR INLET ASSEMBLY
3	7450P-115	FIBER WASHER - FLEXIBLE GAS LINE
4	7450P-022	GAS VENTURI (w/FIBER WASHER)
5	7450P-141	M6 X 12MM SCREWS - VENTURI
6	7500P-195	COMBUSTION BLOWER (w/GASKET)
7	7600P-041	PLATE - COMBUSTION BLOWER M5
8	7500P-075	GASKET - BLOWER TO AIR CHANNEL
9	7250P-477	SCREWS - AIR CHANNEL TO BLOWER
10	7600P-001	AIR CHANNEL (w/SCREWS)
11	7250P-478	SCREWS - AIR CHANNEL TO HEAT EXCHANGER
12	7500P-074	GASKET - BURNER
13	7600P-009	BURNER (w/GASKET) EFT-110

ITEM#	REPLACEMENT PART #	DESCRIPTION
	7600P-010	BURNER (w/GASKET) EFT-55, 80
14	7600P-087	FLAME RECIFICATION PROBE (w/GASKET, SCREWS)
15	7350P-021	IGNITOR (w/GASKET, SCREWS)
16	7600P-077	BURNER DOOR
17	7600P-071	GASKET - BURNER DOOR
18	7600P-070	REFRACTORY - BURNER DOOR
19	7600P-072	SIGHT GLASS (w/GASKET, SCREWS)
20	7600P-002	HEAT EXCHANGER (EFT-55)
	7600P-003	HEAT EXCHANGER ONLY (EFT-80)
	7600P-004	HEAT EXCHANGER ONLY (EFT-110)
21	7450P-025	GAS VALVE
22	7250P-140	GAS SHUT-OFF VALVE

Figure 37 - Combustion System Replacement Parts - 55 - 110kBTU Models

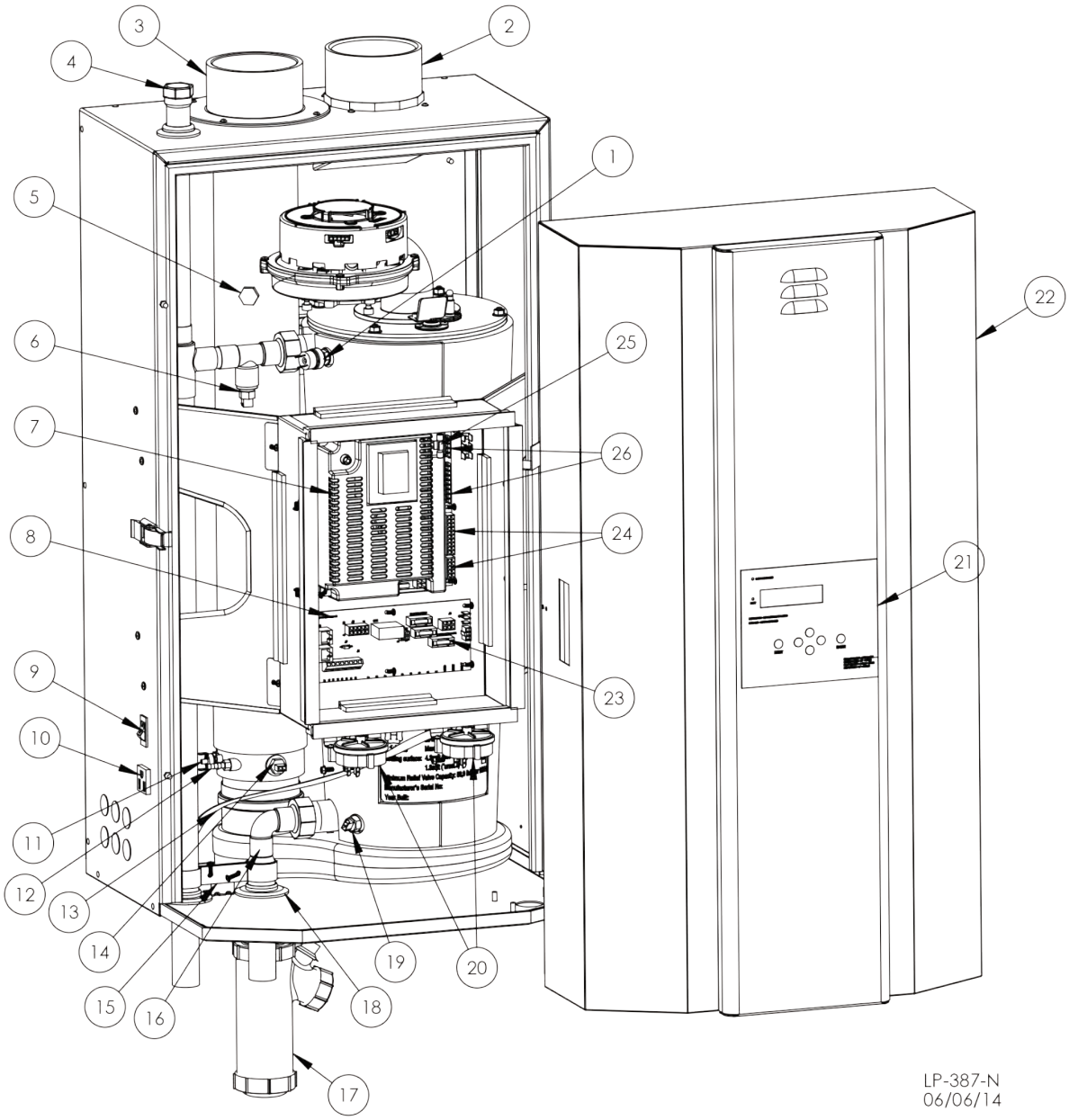

ITEM #	REPLACEMENT PART #	DESCRIPTION
1	7600P-007	WATER PRESSURE SWITCH
2	7450P-030	3" PVC INTAKE ADAPTER
3	7600P-060	3" PVC EXHAUST ASSEMBLY
4	7600P-501	SUPPLY PIPING ASSEMBLY
5	7600P-043	PVC PLUG - 1/4"
6	7600P-045	COMBINATION SUPPLY/ HIGH TEMPERATURE SWITCH
7	7450P-122	926 CONTROL BOARD (w/RIBBON CABLE)
8	7350P-070	FIELD CONNECTION BOARD
9	7500P-087	POWER SWITCH
10	7500P-037	CONDENSATE OUTLET
11	7250P-739	FLUE SWITCH
12	7250P-154	S.S. HOSE BARB (w/O-RING)
13	7000P-805	PLASTIC TUBING - PRESSURE SWITCHES
14	7450P-026	FLUE TEMPERATURE SENSOR

ITEM#	REPLACEMENT PART#	DESCRIPTION
15	7600P-036	PIPING BRACKET
16	7600P-500	RETURN PIPING ASSEMBLY
17	7600P-006	CONDENSATE ASSEMBLY
18	7600P-057	PIPE GROMMET
19	7250P-059	THERMISTOR (w/O-RING)
20	7600P-502	PRESSURE SWITCH (w/SCREWS)
21	7600P-005	DISPLAY ASSEMBLY
22	7600P-028	FRONT COVER ASSEMBLY
23	7350P-129	FUSE - 3.15A - CUSTOMER CONNECTION BOARD
24	7600P-101	LOW VOLTAGE WIRING HARNESS (location shown)
25	7250P-378	FUSE - 6.3A - CONTROL BOARD
26	7600P-100	120V WIRING HARNESS (location shown)
27	7250P-653	IGNITOR LEAD CABLE (NOT SHOWN)
28	7250P-080	PRESSURE RELIEF VALVE (NOT SHOWN)

Figure 38 - Replacement Parts - 55 - 110kBTU Models - *#20 - Switch on the Left is the Blocked Flue Pressure Switch on the Right is the Blocked Condensate Pressure Switch - Both share same Part Number

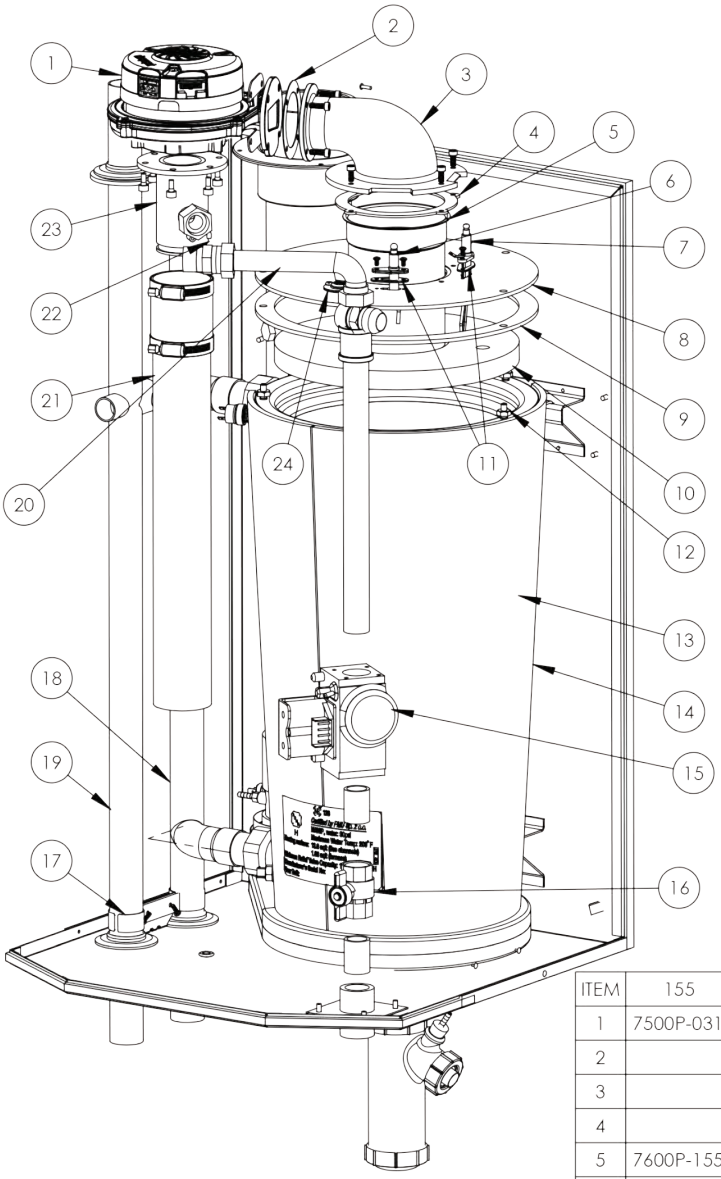

ITEM	155	199	285	399	DESCRIPTION
1	7500P-031	7350P-159			COMBUSTION BLOWER (w/GASKET)
2	7500P-075				GASKET - COMBUSTION BLOWER
3	7600P-908			7600P-909	AIR CHANNEL (w/GASKET, SCREWS)
4	7600P-105			7600P-106	GASKET - BURNER
5	7600P-155	7600P-114		7600P-115	BURNER (w/GASKET)
6	7600P-087				FLAME RECTIFICATION PROBE (w/GASKET, SCREWS)
7	7350P-021				IGNITOR (w/GASKET, SCREWS)
8	7600P-910			7600P-911	BURNER DOOR
9	7600P-112			7600P-113	GASKET - BURNER DOOR
10	7600P-110			7600P-111	REFRACTORY - BURNER DOOR
11	7250P-005				GASKET - PROBES
12	7500P-067				6MM NUTS - BURNER DOOR
13	7600P-090	7600P-091	7600P-092	7600P-093	HEAT EXCHANGER (w/INSULATION)
14	7600P-147			7600P-148	INSULATION - HEAT EXCHANGER
15	7450P-025	7350P-033			GAS VALVE
16	7250P-140	7350P-079			SHUT-OFF VALVE
17	7600P-136			7600P-236	PIPE CLAMP
18	7600P-900		7600P-899	7600P-901	RETURN PIPING ASSEMBLY
19	7600P-902			7600P-903	SUPPLY PIPING ASSEMBLY
20	7100P-140	7600P-152			FLEXIBLE GAS LINE (w/GASKET)
21	7600P-102		7600P-912		AIR INLET - BLOWER
22	7450P-115				GASKET - BSPP CONNECTIONS
23	7450P-024	7450P-023	7450P-029		VENTURI (w/GASKET)
24	7600P-072				SIGHT GLASS (w/GASKET, SCREWS)

LP-387-KK
06/06/14

Figure 39 - Combustion System Replacement Parts - 155 - 399kBTU Models

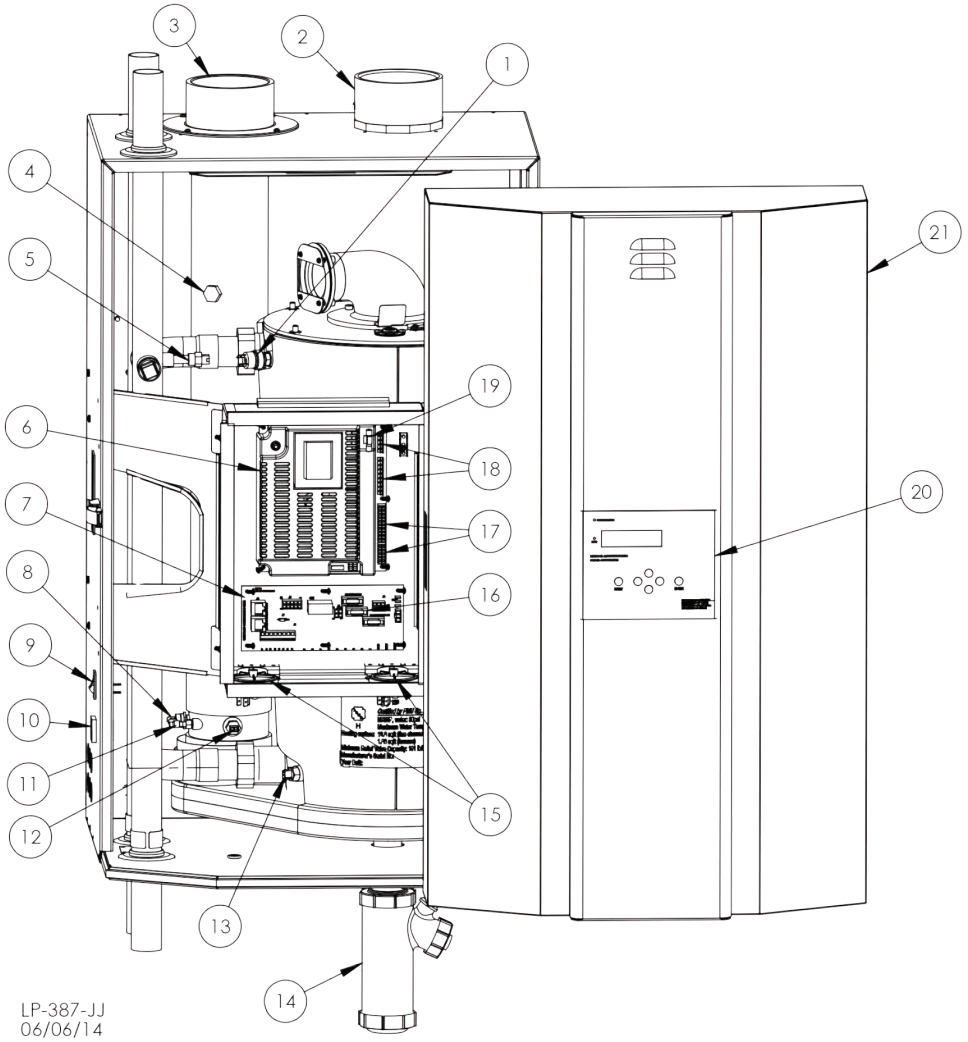

ITEM	155	199	285	399	DESCRIPTION
1	7600P-007			7600P-007*	WATER PRESSURE SWITCH
2	7450P-030			7600P-150	3"/4" INTAKE ADAPTER
3	7600P-060			7600P-119	3"/4" EXHAUST ASSEMBLY
4	7600P-043				PVC PLUG - 1/4"
5	7600P-045				COMBINATION SUPPLY/HIGH TEMPERATURE SWITCH
6	7450P-122				926 CONTROL BOARD (w/RIBBON CABLE)
7	7350P-070				FIELD CONNECTION BOARD
8	7250P-739				FLUE SWITCH
9	7500P-087				POWER SWITCH
10	7500P-037				CONDENSATE OUTLET
11	7250P-154				S.S. HOSE BARB (w/O-RING)
12	7450P-026				FLUE TEMPERATURE SENSOR
13	7250P-059			7250P-667*	THERMISTOR (w/O-RING)
14	7600P-006				CONDENSATE ASSEMBLY
15	7600P-502				PRESSURE SWITCH (w/SCREWS)
16	7350P-129				FUSE - 3.15A CUSTOMER CONNECTION BOARD
17	7600P-904			7600P-905	LOW VOLTAGE WIRING HARNESS (not shown)
18	7600P-906			7600P-907	120V WIRING HARNESS (not shown)
19	7250P-378				FUSE - 6.3A - CONTROL BOARD
20	7600P-005				DISPLAY ASSEMBLY
21	7600P-128			7600P-228	FRONT COVER ASSEMBLY
22	7000P-805				PLASTIC TUBING - PRESSURE SWITCHES (not shown)
23	7250P-653			7350P-120	IGNITOR LEAD CABLE (not shown)
24	7250P-080		7350P-066		PRESSURE RELIEF VALVE (not shown)
25	7000P-805				PLASTIC TUBING - PRESSURE SWITCHES (not shown)

* ITEM ATTACHED TO PIPING ASSEMBLY

Figure 40 - Replacement Parts - 155 - 399kBTU Models - *#15 - Switch on the Left is the Blocked Flue Pressure Switch on the Right is the Blocked Condensate Pressure Switch - Both share same Part Number

Part 14 - Installation Checklist

Light Off Activities		Date Completed:			
1. Fill the Heating System	Check all piping and gas connections. Verify all are tight.				
	Pressurize system. (12 - 15 psi)	PSI			
	Add water to prime condensate cup.				
	Percentage of glycol in system (0 - 50%)	%			
	Verify near boiler piping is properly supported.				
2. Check Gas Pipe	Leak test using locally approved methods (consult jurisdictional code book).				
	Check incoming gas pressure (3.5 to 14" WC).	Static WC			
	Check the "drop" on light off (less than 1" WC).	Dynamic WC			
3. Check Combustion	Check and adjust (if necessary) carbon dioxide content.	%CO_2 High Fire		%CO_2 Low Fire	
	Check and adjust (if necessary) carbon monoxide content.	ppm CO High Fire		ppm CO Low Fire	
4. Check Electrical Connections	Ensure all electrical connections of line voltage (pumps, etc.) and low voltage circuits (system sensor, outdoor sensor, etc.) are properly wired.				
5. Verify System Operation	Turn up thermostat to verify wiring connections.				
6. Record Ionization Current	Check uA reading at d7 on the status menu (see Start-Up section, this manual).	uA High Fire		uA Low Fire	
7. Indirect Water Heater	Verify safety and operation of the indirect water heater. Record settings.	DHW Setpoint		DHW Differential	
8. Mixing Valve	If necessary, ensure thermostatic mixing valve is properly supported and installed.				
9. Convert the Boiler	If necessary, convert the boiler to the proper fuel type.				
	Locate the stickers in the appropriate locations on the boiler.				
	Verify combustion settings after gas conversion - Carbon Dioxide.	%CO_2 High Fire		%CO_2 Low Fire	
	Verify combustion settings after gas conversion - Carbon Monoxide.	ppm CO High Fire		ppm CO Low Fire	
	Mail in conversion registration.				
10.	Record heating curve. Record steps	*8	*9	*10	*11
Notes:					

Table 28 - Installation Checklist

Part 15 - Maintenance Report

CAUTION

In unusually dirty or dusty conditions, care must be taken to keep boiler cabinet door in place at all times. Failure to do so VOIDS the warranty.

The boiler requires minimal periodic maintenance under normal conditions. However, in unusually dirty or dusty conditions, periodic vacuuming of the cover to maintain visibility of the display and indicators is recommended.

Periodic maintenance should be performed once a year by a qualified service technician to assure that all the equipment is operating safely and efficiently. The owner should make necessary arrangements with a qualified heating contractor for periodic maintenance of the boiler. Installer must also inform the owner that the lack of proper care and maintenance of the boiler may result in a hazardous condition.

⚠ WARNING

Allowing the boiler to operate with a dirty combustion chamber will hurt operation. Failure to clean the heat exchanger as needed by the installation location could result in boiler failure, property damage, personal injury, or death. Such product failures ARE NOT covered under warranty.

Inspection Activities		Date Last Completed			
Piping		**1st Year**	**2nd Year**	**3rd Year**	**4th Year***
Near boiler piping	Check boiler and system piping for any sign of leakage; make sure pipes are properly supported.				
Vent	Check condition of all vent pipes and joints. Ensure the vent piping terminations are free of obstructions and blockages.				
System		**1st Year**	**2nd Year**	**3rd Year**	**4th Year***
Visual	Do a full visual inspection of all system components.				
Functional	Test all functions of the system (Heat, Safeties).				
Temperatures	Verify safe settings on boiler or anti-scald valve.				
	Verify programmed temperature settings.				
Electrical					
Connections	Check wire connections. Make sure connections are tight.				
Smoke and CO Detector	Verify devices are installed and working properly. Change batteries if necessary.				
Circuit Breakers	Check to see that the circuit breaker is clearly labeled. Exercise circuit breaker.				
Switch and Plug	Verify ON/OFF switch and convenience plug are both functional				
Chamber / Burner		**1st Year**	**2nd Year**	**3rd Year**	**4th Year***
Combustion Chamber	Check burner tube and combustion chamber coils. Clean according to maintenance section of manual. Vacuum combustion chamber. Replace any gaskets that show signs of damage.				
Spark Electrode	Clean. Set gap at .156" Clean probe with plumbers cloth to remove oxides.				
Combination Ignitor and Flame Probe	Check ionization in uA (d7 in Status Menu in Start-Up Procedures). Record high fire and low fire. Clean probe with plumbers cloth to remove oxides.				
Condensate		**1st Year**	**2nd Year**	**3rd Year**	**4th Year***
Neutralizer	Check condensate neutralizer. Replace if necessary.				
Condensate Pipe	Ensure the condensate trap is filled with water. Disconnect condensate hose. Clean out dirt. Fill with water to level of outlet and reinstall. (NOTE: Verify the flow of condensate, making sure that the hose is properly connected during final inspection.)				
Gas		**1st Year**	**2nd Year**	**3rd Year**	**4th Year***
Pressure	Measure incoming gas pressure (3.5 to 14" WC).				
Pressure Drop	Measure drop in pressure on light off (no more than 1" WC).				
Check Gas Pipe for Leaks	Check gas piping. Test for leaks and signs of aging. Make sure all pipes are properly supported.				
Combustion		**1st Year**	**2nd Year**	**3rd Year**	**4th Year***
CO / CO_2 Levels	Check CO and CO_2 levels in exhaust. See Start-Up Procedures for ranges. Record at high and low fire.				
Safeties		**1st Year**	**2nd Year**	**3rd Year**	**4th Year***
ECO (Energy Cut Out)	Check continuity on flue and water ECO. Replace if corroded.				
Sensors	Check wiring. Verify through ohms reading.				
Final Inspection		**1st Year**	**2nd Year**	**3rd Year**	**4th Year***
Check List	Verify that you have completed entire check list. WARNING: FAILURE TO DO SO COULD RESULT IN SERIOUS INJURY OR DEATH.				
Homeowner	Review what you have done with the homeowner.				

Table 29 - *Continue annual maintenance beyond the 4th year as required.

ADDITIONAL INSTALLATION REQUIREMENTS FOR THE COMMONWEALTH OF MASSACHUSETTS

In the Commonwealth of Massachusetts, the installer or service agent shall be a plumber or gas fitter licensed by the Commonwealth.

When installed in the Commonwealth of Massachusetts or where applicable state codes may apply; the unit shall be installed with a CO detector per the requirements listed below.

5.08: Modifications to NFPA-54, Chapter 10

(1) Revise NFPA-54 section 10.5.4.2 by adding a second exception as follows:

Existing chimneys shall be permitted to have their use continued when a gas conversion burner is installed, and shall be equipped with a manually reset device that will automatically shut off the gas to the burner in the event of a sustained back-draft.

(2) Revise 10.8.3 by adding the following additional requirements:

(a) For all side wall horizontally vented gas fueled equipment installed in every dwelling, building or structure used in whole or in part for residential purposes, including those owned or operated by the Commonwealth and where the side wall exhaust vent termination is less than seven (7) feet above finished grade in the area of the venting, including but not limited to decks and porches, the following requirements shall be satisfied:

1. INSTALLATION OF CARBON MONOXIDE DETECTORS. At the time of installation of the side wall horizontal vented gas fueled equipment, the installing plumber or gasfitter shall observe that a hard wired carbon monoxide detector with an alarm and battery back-up is installed on the floor level where the gas equipment is to be installed. In addition, the installing plumber or gasfitter shall observe that a battery operated or hard wired carbon monoxide detector with an alarm is installed on each additional level of the dwelling, building or structure served by the side wall horizontal vented gas fueled equipment. It shall be the responsibility of the property owner to secure the service of qualified licensed professionals for the installation of hard wired carbon monoxide detectors

a. In the event that the side wall horizontally vented gas fueled equipment is installed in a crawl space or an attic, the hard wired carbon monoxide detector with alarm and battery back-up may be installed on the next adjacent floor level.

b. In the event that the requirements of this subdivision cannot be met at the time of completion of installation, the owner shall have a period of thirty (30) days to comply with the above requirements; provided, however, that during said thirty (30) day period, a battery operated carbon monoxide detector with an alarm shall be installed.

2. APPROVED CARBON MONOXIDE DETECTORS. Each carbon monoxide detector as required in accordance with the above provisions shall comply with NFPA 720 and be ANSI/UL 2034 listed and IAS certified.

3. SIGNAGE. A metal or plastic identification plate shall be permanently mounted to the exterior of the building at a minimum height of eight (8) feet above grade directly in line with the exhaust vent terminal for the horizontally vented gas fueled heating appliance or equipment. The sign shall read, in print size no less than one-half (1/2) inch in size, "GAS VENT DIRECTLY BELOW, KEEP CLEAR OF ALL OBSTRUCTIONS".

4. INSPECTION. The state or local gas inspector of the side wall horizontally vented gas fueled equipment shall not approve the installation unless, upon inspection, the inspector observes carbon monoxide detectors and signage installed in accordance with the provisions of 248 CMR 5.08 (2)(a) 1 through 4.

(b) EXEMPTIONS: the following equipment is exempt from 248 CMR 5.08 (2)(a) 1 through 4:

1. The equipment listed in Chapter 10 entitled "Equipment Not Required to be Vented" in the most current edition of NFPA 54 as adopted by the Board; and

2. Product Approved side wall horizontally vented gas fueled equipment installed in a room or structure separate from the dwelling, building or structure used in whole or in part for residential purposes.

(c) MANUFACTURER REQUIREMENTS – GAS EQUIPMENT VENTING SYSTEM PROVIDED. When the manufacturer of Product Approved side wall horizontally vented gas equipment provides a venting system design or venting system components with the equipment, the instructions provided by the manufacturer for installation of the equipment and the venting system shall include:

1. Detailed instructions for the installation of the venting system design or the venting system components; and

2. A complete parts list for the venting system design or venting system.

(d) MANUFACTURER REQUIREMENTS – GAS EQUIPMENT VENTING SYSTEM NOT PROVIDED. When the manufacturer of a Product Approved side wall horizontally vented gas fueled equipment does not provide the parts for venting the flue gases, but identifies "special venting systems", the following requirements shall be satisfied by the manufacturer:

1. The referenced "special venting system" instructions shall be included with the appliance or equipment installation instructions; and

2. The "special venting systems" shall be Product Approved by the Board, and the instructions for that system shall include a parts list and detailed installation instructions.

(e) A copy of all installation instructions for all Product Approval side wall horizontally vented gas fueled equipment, all venting instructions, all parts lists for venting instructions, and/or all venting design instructions shall remain with the appliance or equipment at the completion of the installation.

Elite FT Boiler
Limited Warranty
Twelve year warranty to assure your complete satisfaction.

HTP warrants each Elite FT boiler to be free from defects in material and workmanship according to the following terms, conditions, and time periods. UNLESS OTHERWISE NOTED THESE WARRANTIES COMMENCE ON THE DATE OF INSTALLATION.

COVERAGE

A. HTP warrants that it will repair or replace, at its option, without charge, any defective Elite FT boiler or malfunctioning component thereof that is found to have failed due to manufacturer's defect during the first year after installation (with the exceptions of the Elite FT Blower Motor, which will have a limited warranty of 3 years). HTP will NOT accept claims from the purchaser for labor costs incurred as a result of the repair, replacement, removal, or reinstallation of an Elite FT boiler or any component thereof. It is expressly agreed between HTP and the purchaser that repair or replacement are the exclusive remedies of the purchaser.

B. During the second through twelfth years after the date of installation, HTP will repair or replace, at its option, any defective Elite FT boiler found to have failed due to a leaking heat exchanger at a cost to the purchaser equal to the following percentages of the manufacturer's list price in effect at the date of replacement.

Year of Claim	2-7	8 & 9	10 & 11	12
Percentage to be Paid by Purchaser	0 %	25 %	50 %	75 %

No other component of the boiler will be replaced during this period. HTP will NOT accept claims from the purchaser for labor costs incurred as a result of the repair, replacement, removal or reinstallation of an Elite FT boiler or any component thereof. It is expressly agreed between HTP and the purchaser that repair or replacement are the exclusive remedies of the purchaser.

C. Should a defect or malfunction result in a leakage of water within the above-stated warranty periods due to defective material or workmanship, malfunction or failure to comply with the above warranty, such as defects or malfunctioning having been verified by an authorized HTP representative, HTP will replace the defective or malfunctioning Elite FT boiler with a replacement boiler of the nearest comparable model available at the time of replacement.

D. If HTP is unable to repair or replace an Elite FT boiler so as to conform to this warranty after a reasonable number of attempts, HTP will then provide, at its option, a replacement unit. These remedies are the purchaser's exclusive remedies for breach of warranty.

E. If, at the time of a request for service the purchaser cannot provide a copy of the original sales receipt or the warranty card registration, the warranty period for the Elite FT boiler shall then be deemed to have commenced thirty (30) days after the date of manufacture of the Elite FT boiler and NOT the date of installation.

F. This warranty extends only to Elite FT boilers utilized in closed loop heating applications that have been properly installed based upon manufacturer's installation instructions. The use of the Elite FT boiler for potable water-heating shall void any coverage under this warranty.

G. Replacement parts will be warranted for ninety (90) days.

OWNER'S RESPONSIBILITIES

To avoid the exclusion list in this warranty, the owner or installer must:

1. Maintain the boiler in accordance with the maintenance procedure listed in the installation manual. Preventive maintenance can help avoid any unnecessary breakdown of the boiler and keep it running at optimum efficiency.
2. Ensure all related heating components are properly maintained and kept in good operating condition.
3. Check condensate lines to confirm that all condensate drains properly from the boiler.
4. Use the boiler in a closed system with a properly sized and installed thermal expansion tank.
5. Make provisions so if the boiler or any component part thereto should leak, the resulting flow of water will not cause damage to the area in which it is installed.
6. Operate the boiler at water pressures not exceeding the working pressure shown on the rating plate.

WARRANTY EXCLUSIONS

HTP does not warrant:

1. All labor charges incurred by any person in connection with the examination or replacement of parts claimed by the purchaser to be defective.
2. Any failed components of the heat system not manufactured by HTP as part of the Elite FT boiler.
3. Boilers repaired or altered without prior written approval of HTP so as to adversely affect their reliability.
4. Any damages, defects or malfunctions resulting from improper maintenance, misuse, abuse, accident, negligence, freezing and the like.
5. Any damage or failure resulting from hard water scale buildup on the heat exchanger.
6. Any damage or failure resulting from contaminated air, including, but not limited to, sheetrock particles, plasterboard particles, dirt or dust, being introduced into the boiler or its components including, but not limited to, the heat exchanger.
7. Damages, malfunctions, or failures resulting from failure to install the boiler in accordance with applicable building codes/ordinances or good plumbing and electrical trade practices.
8. Damages, malfunctions, or failures resulting from improper installation, failure to operate the boiler at pressures not exceeding the working pressure shown on the rating plate, or failure to maintain and operate the boiler in accordance with the printed instructions that accompany the unit.
9. Failure to operate the boiler in a closed system with a properly sized expansion tank.
10. Failure or performance problems caused by improper sizing of the boiler, piping, expansion device, gas supply line, venting connection, combustion air openings, electric service voltage, wiring, or fusing.
11. Any damage or failure resulting from improper water chemistry. WATER CHEMISTRY REQUIREMENTS – Sodium less than 20mGL. Water pH between 6.0 and 8.0. Hardness less than 7 grains. Chlorine concentration less than 100 ppm.
12. Any damages, malfunctions, or failures resulting from the use of dielectric unions.
13. Components of the boiler that are not defective, but must be replaced during the warranty period as a result of reasonable wear and tear.
14. Components of the boiler that are subject to warranties, if any, given by their manufacturers; HTP does not adopt these warranties.
15. Malfunctions resulting from, or repairs necessitated by, flood, fire, wind, or lightning, or uses of the boiler for purposes other than that for which it was designed.
16. Any unit purchased from an unauthorized dealer or any online retailer.
17. Units installed outside the fifty states (and the District of Columbia) of the United States of America and Canada.

PROCEDURES FOR WARRANTY SERVICE REQUESTS

Any claim for warranty assistance must be made promptly. Any

claim for warranty assistance must be made promptly. Determine if the boiler is "in-warranty" (that is, within the applicable warranty period) by reviewing a copy of the original sales receipt. You must present a copy of the original sales receipt for a warranty service request.

If your boiler is "in-warranty", contact the retailer from whom the boiler was purchased (or the installer) for assistance. Be prepared to provide the retailer or installer with a copy of your original receipt, complete model and serial numbers, and the date of installation of your boiler, in addition to explanation of your water heater problem. Warranty coverage is subject to validation of "in-warranty" coverage by HTP claims department personnel. All alleged defective or malfunctioning parts must be returned to HTP via the local distribution channels where original purchase was made. **NOTE: Any parts or boilers returned to HTP for warranty analysis will become the property of HTP and will not be returned, even if credit is denied.**

If all warranty conditions are satisfied, HTP will provide replacement parts to the retailer.

If you have questions about the coverage of this warranty, please contact HTP at the address or phone number stated below:

HTP
272 Duchaine Blvd.
New Bedford, MA. 02745
Attention: Warranty Service Department
(800) 323-9651

SERVICE, LABOR AND SHIPPING COSTS

This warranty does not extend to shipping charges, delivery expenses, or administrative fees incurred by the purchaser in repairing or replacing the Elite FT boiler. This warranty does not extend to labor costs beyond the coverage specified in this warranty document.

LIMITATIONS OF YOUR HTP WARRANTY AND REMEDIES

THE FOREGOING WARRANTIES ARE EXCLUSIVE AND ARE GIVEN AND ACCEPTED IN LIEU OF ANY AND ALL OTHER WARRANTIES, EXPRESS OR IMPLIED, INCLUDING WITHOUT LIMITATION THE IMPLIED WARRANTIES OF MERCHANTABILITY AND FITNESS FOR A PARTICULAR PURPOSE AND ANY OBLIGATION, LIABILITY, RIGHT, CLAIM OR REMEDY IN CONTRACT OR TORT, WHETHER OR NOT ARISING FROM HTP'S NEGLIGENCE, ACTUAL OR IMPUTED. THE REMEDIES OF THE PURCHASER SHALL BE LIMITED TO THOSE PROVIDED HEREIN TO THE EXCLUSION OF ANY OTHER REMEDIES INCLUDING WITHOUT LIMITATION, INCIDENTAL OR CONSEQUENTIAL DAMAGES, SAID INCIDENTAL AND CONSEQUENTIAL DAMAGES INCLUDING, BUT NOT LIMITED TO, PROPERTY DAMAGE, LOST PROFIT OR DAMAGES ALLEGED TO HAVE BEEN CAUSED BY ANY FAILURE OF HTP TO MEET ANY OBLIGATION UNDER THIS AGREEMENT INCLUDING THE OBLIGATION TO REPAIR AND REPLACE SET FORTH ABOVE. NO AGREEMENT VARYING OR EXTENDING THE FOREGOING WARRANTIES, REMEDIES OR THIS LIMITATION WILL BE BINDING UPON HTP. UNLESS IN WRITING AND SIGNED BY A DULY AUTHORIZED OFFICER OF HTP. THE WARRANTIES STATED HEREIN ARE NOT TRANSFERABLE AND SHALL BE FOR THE BENEFIT OF THE ORIGINAL PURCHASER OF AN ELITE FT ONLY.

NO OTHER WARRANTIES

Your HTP warranty gives you specific legal rights, and you may also have other rights that vary from state to state. Some states do not allow the exclusion or limitation of incidental or consequential damages so this limitation or exclusion may not apply to you.

These are the only written warranties applicable to the Elite FT boiler manufactured and sold by HTP. HTP neither assumes nor authorizes anyone to assume for it any other obligation or liability in connection with said Elite FT boilers.

HTP reserves the right to change specifications or discontinue models without notice.

Maintenance Notes

Customer Installation Record Form	
The following form should be completed by the installer for you to keep as a record of the installation in case of a warranty claim. After reading the important notes at the bottom of the page, please also sign this document.	
Customer's Name	
Date of Installation	
Installation Address	
Product Name / Serial Number(s)	
Comments	
Installer's Code / Name	
Installers Phone Number	
Signed by Installer	
Signed by Customer	
Installation Notes	

IMPORTANT

Customer: Please only sign after the installer has fully reviewed the installation, safety, proper operation, and maintenance of the system. If the system has any problems please call the installer. If you are unable to make contact, please call your sales representative.

Distributor / Dealer: Please insert contact details.

Advanced Heating and Hot Water Systems

P.O. Box 429 · 120 Braley Road · East Freetown, MA 02717 · 508-763-8071· Fax: 508-763-3769

Elite FT Heating Boiler
Submittal Sheet

Elite FT Heating Boiler

JOB NAME:

LOCATION:

ARCH. / ENGR.:

WHOLESALER:

MECH. CONTRACTOR:

MODEL NUMBER:

TYPE OF GAS:

BTU/HR INPUT LOW - HIGH FIRE:

NOTES:

Heat Exchanger

- **All Stainless Steel ASME "H" Stamped Construction**
- **National Board listed**
- **Low pressure drop, gasketless, vertical tube combustion heat exchanger design – provides maintenance-free operation on internal buildup of material inside the combustion chamber**
- **30 PSI Relief Valve, EFT-55 – 199**
- **80 PSI Relief Valve, EFT-285 and 399 models**

Combustion System

- **Modulating burner with up to 5 to 1 turndown**
- **Up to 96.3% AFUE**
- **High Grade Burner Design**
- **Spark Ignition**
- **Models Available for Natural or LP Gas**
- **Dual Flame monitoring (Spark and Flame probe)**

Integrated Control System

- **Digital operating control with 2 line / 20 character LCD text display to program and monitor boiler operation**
- **Three boiler set point temperature inputs– Boiler Pump – System Pump – DHW Pump / Domestic Hot Water priority with timing**
- **Programmable settings: Outdoor Reset Curve – DHW Supply Set Point – Step Sequence for delayed response for smart zones – Boost Response - Cascade up to 8 boilers**
- **Field Connection Board – Line voltage terminal strip with 120 VAC / 60 Hertz power / low voltage terminal strip with multiple contacts - Cascade wiring CAT 5 / CAT 3**
- **24 Volt monitoring**
- **0-10 VDC input for Building Management System**
- **Boiler output regulation (Adjustment of boiler output down to 50 percent of rated capacity)**
- **Low water protection device**
- **Password Security - Flashing maintenance indicator with optional programmed installer contact information**
- **Time Clock / Data logging – Last 10 fault codes with date and time**
- **Customized freeze protection parameters**
- **Modbus enable through external adapter to monitor or control boiler through BMS system**

Additional Features

- **Superior condensate collection system with overflow protection switch**
- **Vents in Plastic PVC - CPVC - Stainless Steel – ULC S636 flexible polypropylene vent liner (chimney lining only)**
- **Vents up to 200 combined equivalent feet**
- **12 Year Limited Warranty**
- **Manual reset high temperature limit**
- **Dry contact for alarm output**
- **Included wall mount bracket**

Optional

☐ **System / Pipe Sensor (Part # 7250P-324)**

☐ **Indirect Water Heater Sensor (7250P-325)**

☐ **3" Polypro Flex Vent Kit (8400P-001)**

☐ **3" (80mm) PP Concentric Vent Kit (KGAVT0601CVT)**

☐ **3" Stainless Steel Termination Vent Kit (V1000)**

☐ **4" Stainless Steel Termination Vent Kit (V2000)**

☐ **Flow Switch (7450P-213)**

☐ **Condensate Neutralizer (7450P-212)**

☐ **U.L. 353 Compliant Low Water Cut-Off Interface Kit w/ Manual Reset (7600P-104 for EFT55 – 110, 7600P-990 for EFT 155 – 399)**

☐ **Alarm System (7350P-602) to monitor any failure**

☐ **PC Connection Cable w / Software (7350P-320)**

☐ **Vision II (7250P-319)**

☐ **Modbus (7350P-629)**

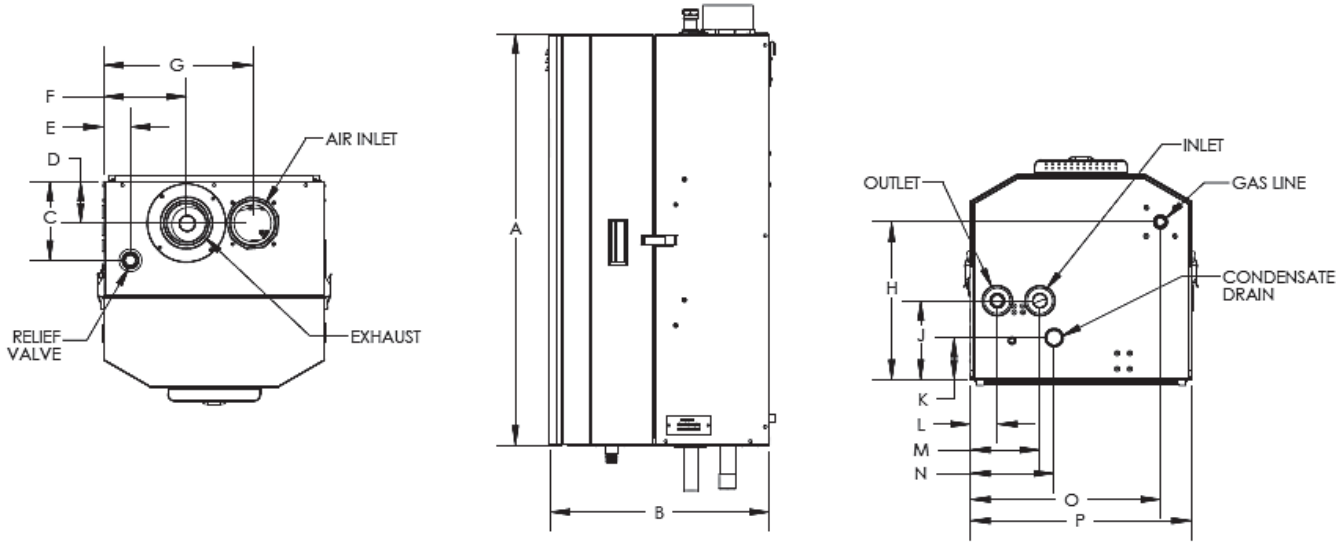

MODEL	MAX. MBH	MIN. MBH	AFUE	HEATING CAPACITY MBH	A	B	C	D	E	F	G	H	J	K	L	M	N	O	P
EFT-55	55	11	96.3	51	32-1/2"	17-3/8"	6-1/4"	3-1/2"	2-1/4"	6-1/2"	11-3/4"	12-1/2"	6-1/4"	3-1/2"	2"	5-1/2"	6-1/2"	15"	17-1/2"
EFT-80	80	17	96.0	79															
EFT-110	110	22	95.6	102															

MODEL	GAS CONNECTION	WATER CONNECTION	AIR INLET	VENT SIZE	PSI RATING	SHIPPING WT. (LBS)
EFT-55	3/4"	1"	3"	3"	30 PSI	125
EFT-80						128
EFT-110						130

LP-387-K
07/12/13

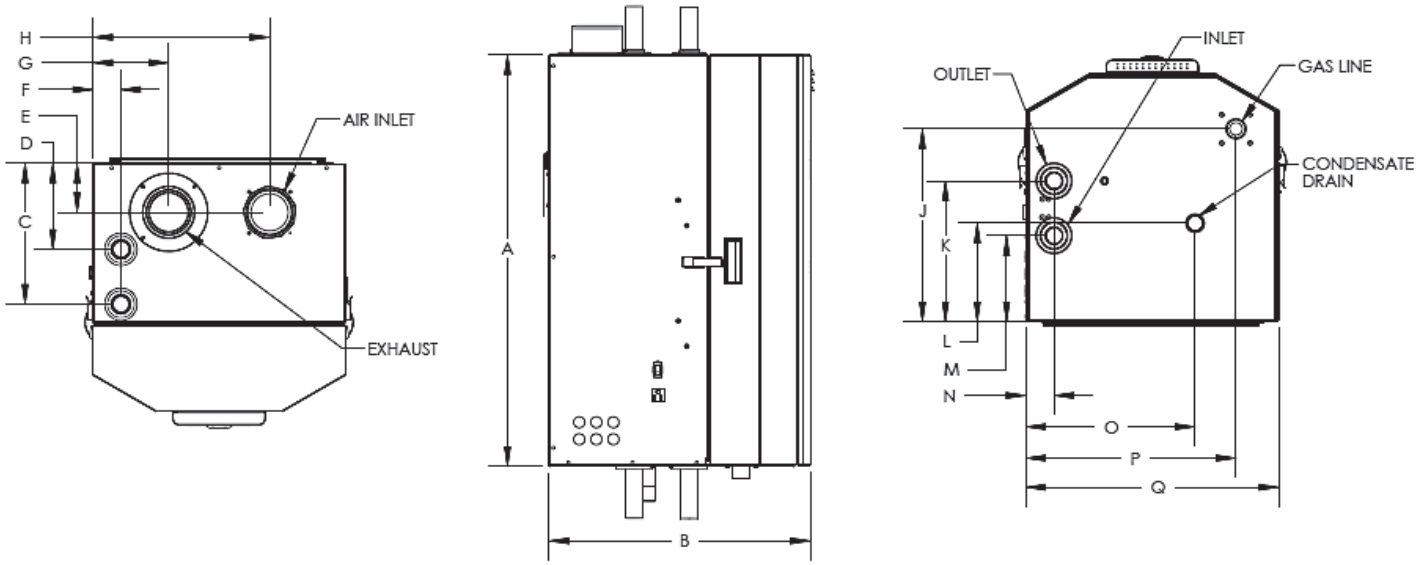

MODEL	MAX MBH	MIN MBH	AFUE	HEATING CAP. MBH	A	B	C	D	E	F	G	H	J	K	L	M	N	O	P	Q
EFT-155	155	31	95.1	142	32-5/8"	20-5/8"	11-1/8"	6-7/8"	3-7/8"	2-1/4"	6"	14"	15-1/4"	11-1/8"	7-3/4"	6-7/8"	2-1/4"	13-3/8"	16-5/8"	20"
EFT-199	199	40	95.3	183																
EFT-285	285	57	95.0	262																
EFT-399	399	80	93.2 *	367	36-3/8"	23-5/8"	13-5/8"	8-1/2"	4-3/4"	2-3/4"	7-3/8"	18-1/8"	18-3/4"	13-5/8"	9-3/4"	8-1/2"	2-3/4"	16-1/2"	19-1/4"	25-1/2"

MODEL	GAS CONNECTION	WATER CONNECTION	AIR INLET	VENT SIZE	PSI RATING	SHIPPING WT. (LBS)
EFT-155	3/4"	1-1/4"	3"	3"	30 PSI	195
EFT-199						198
EFT-285	1"				80 PSI	203
EFT-399		1-1/2"	4"	4"		298

ALL DIMENSIONS ARE APPROXIMATE
* THERMAL EFFICIENCY (NOT AFUE)

LP-387-K2
07/12/13

NOTE: HTP reserves the right to make product changes or updates without notice and will not be held liable for typographical errors in literature.

INSTALLATION MANUAL FOR THE HSPS120LT & HSPS120Q1 INTEGRATOR

Works with the Hydro Shark 3, Hydro Smart 170 & BTH Ultra Boilers

Seamless Integration of heating source to emitters

HSPS120LT

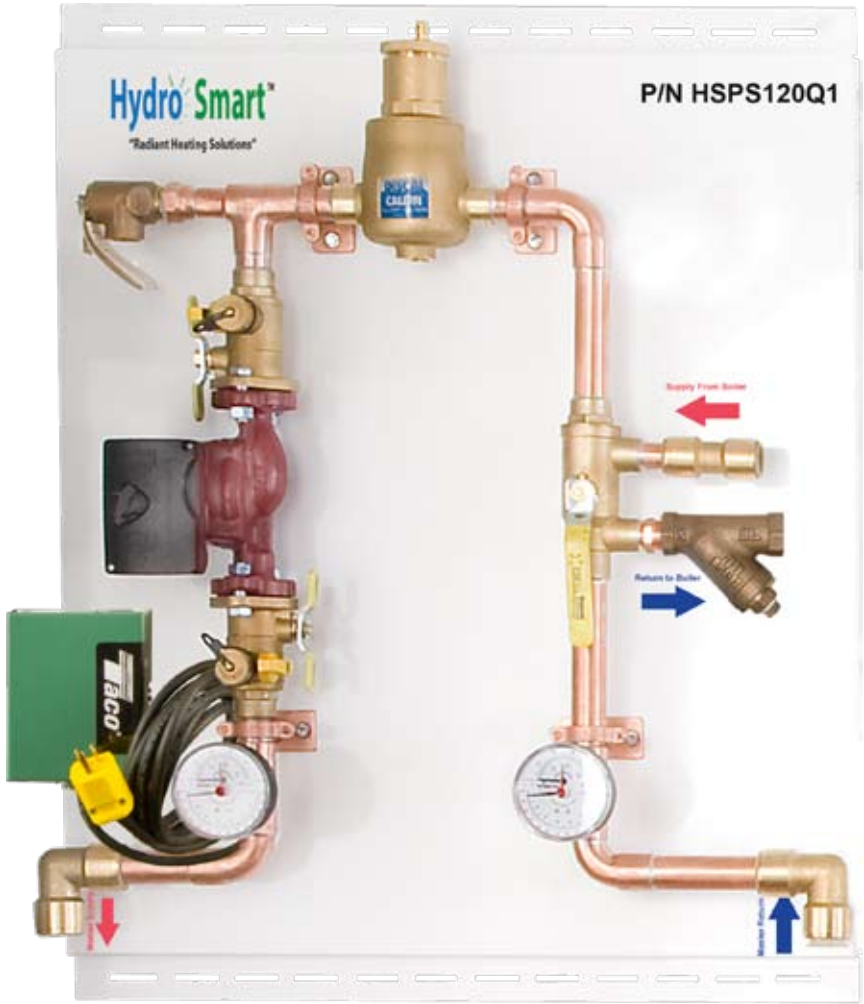

HSPS120Q1

WARNING!!

Do not plug in control cord until all fluids and thermostat connection is finished.

DAMAGES - If unit is damaged, do not return to store. Please call 1-800-355-4945 for trouble shooting, returns, or replacement parts.

Step 1- Mount Integrator Panel onto wall with four 1/4" x 1 - 1/2" Lg wood screws. Utilize the slots on the top and bottom of integrator panel.

Step 2- Install Clear Y Strainer as shown in picture. Attached to strainer with a tube of sealant. Apply thread sealant to male part of thread. Rotate strainer clockwise until tight.

Step 3- Install 3/4" supply and return lines to boiler. Use 3/4 type L copper or 3/4" oxygen barrier PEX tubing.

Step 4- Install 1" supply and returns to emitter devices (Manifold). Use 1 " type L copper or 1" oxygen barrier PEX tubing.

Step 5- Introduce fluids into system and purge air out of system.

Step 6- Optional - (highly recommended) Install Backflow/Autofill device on autofill connection point on panel. (If system fluids are reduced due to relief valve opening the autofill will replace the fluid automatically.

Step 7- Install low voltage thermostat (TH135 or TH115-AF-024T)

Step 8- Plug in cord and activate thermostat. Acknowledge the following:

A. Both circulator pumps running

B. Boiler energized and providing heat.

C. Observe gauges for performance of system (Pressure & Temperature).

For more comprehensive installation manual visit our website at:
www.hydro-smart.com

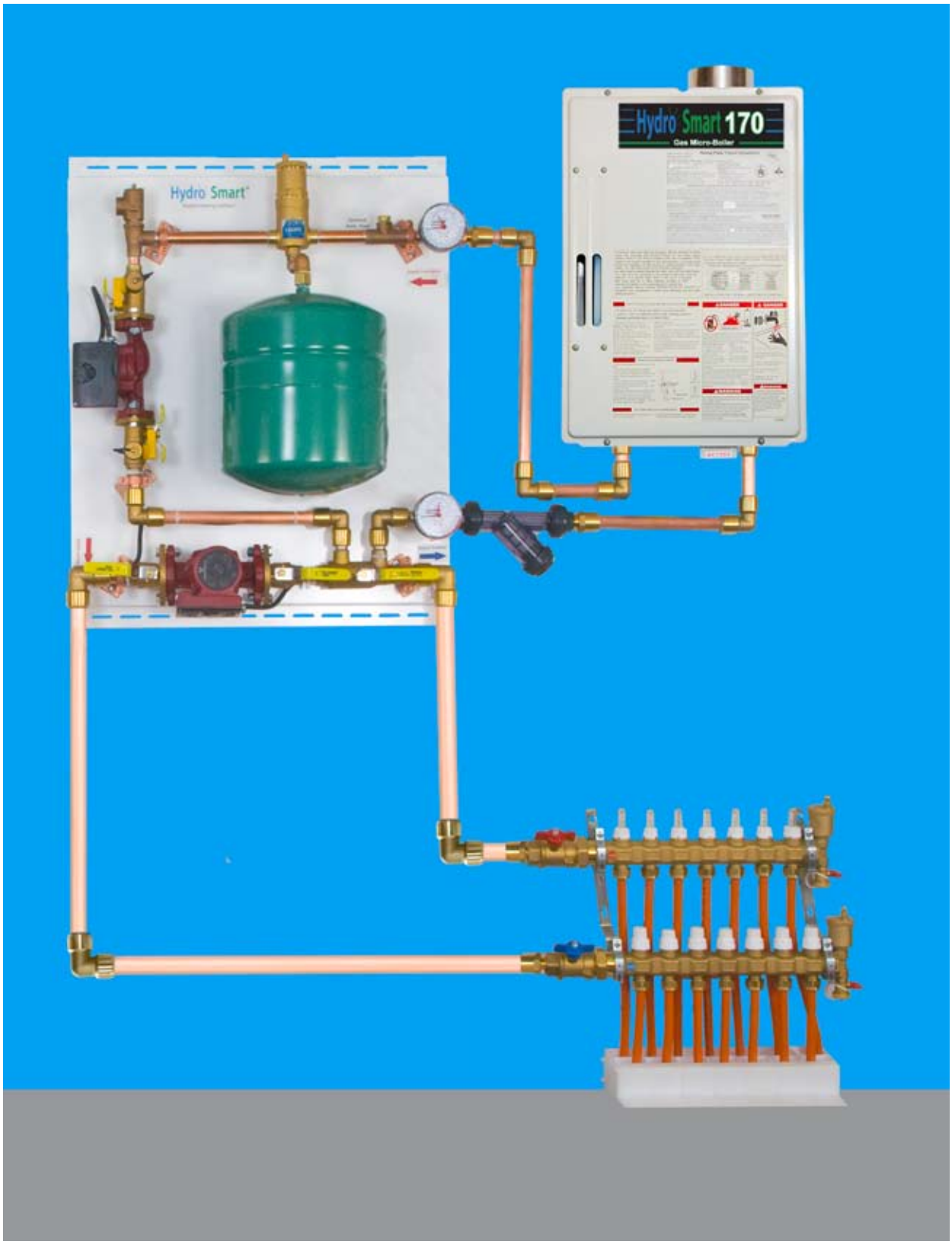

Hydro Smart 170 with HSPS120LT Integrator

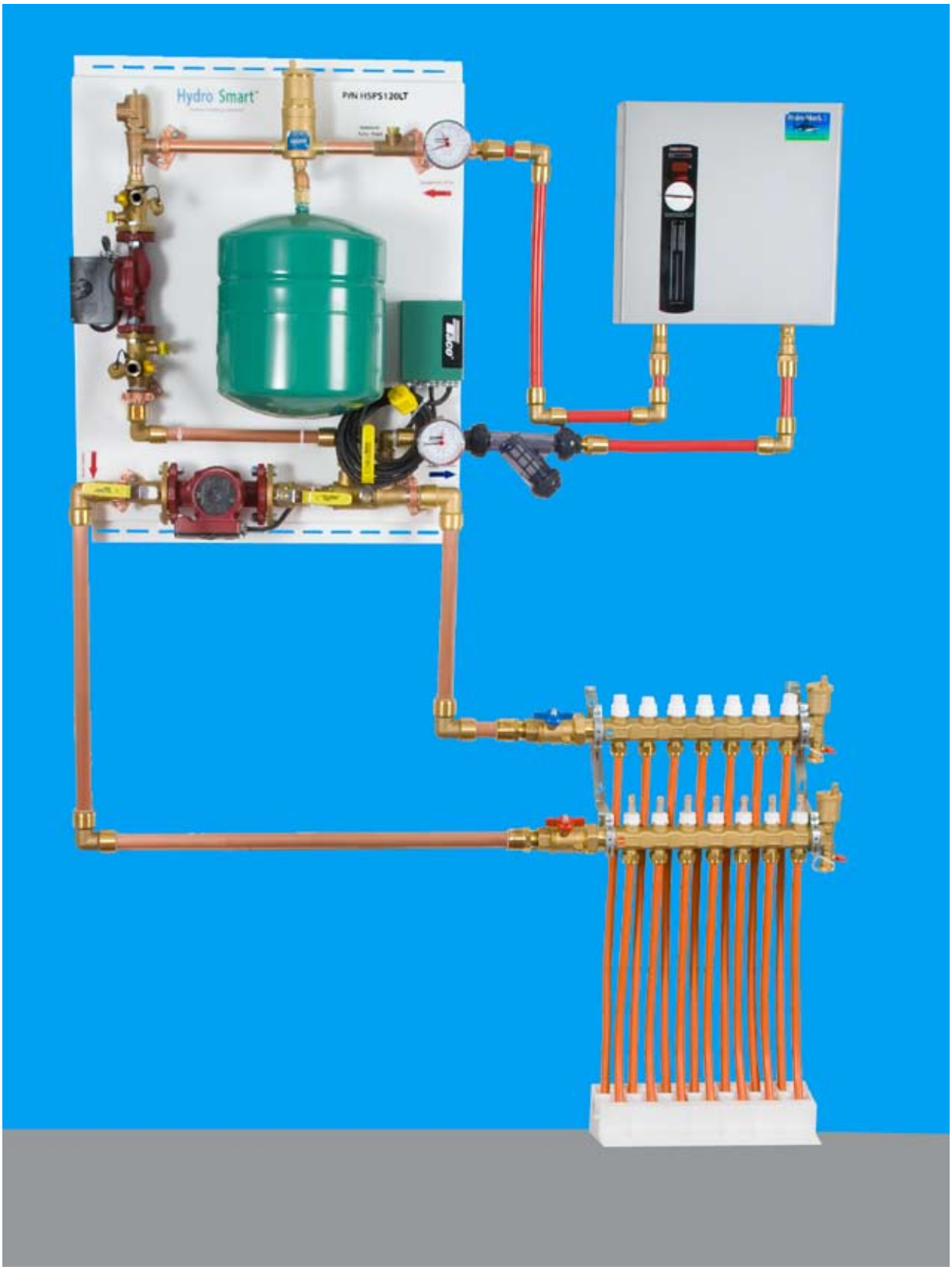

Hydro Shark 3 with HSPS120LT Integrator

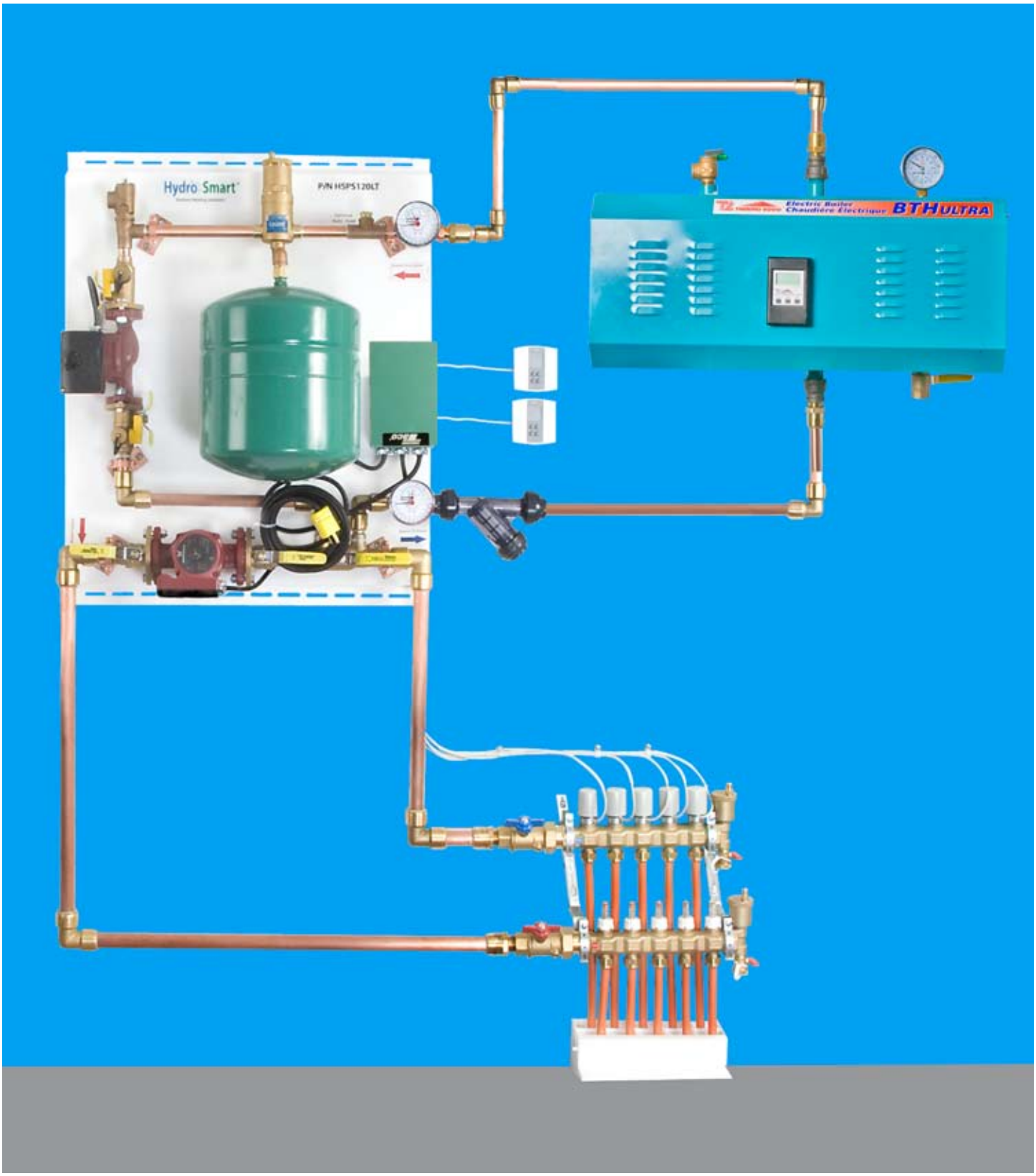

BTH Ultra with HSPS120LT Integrator

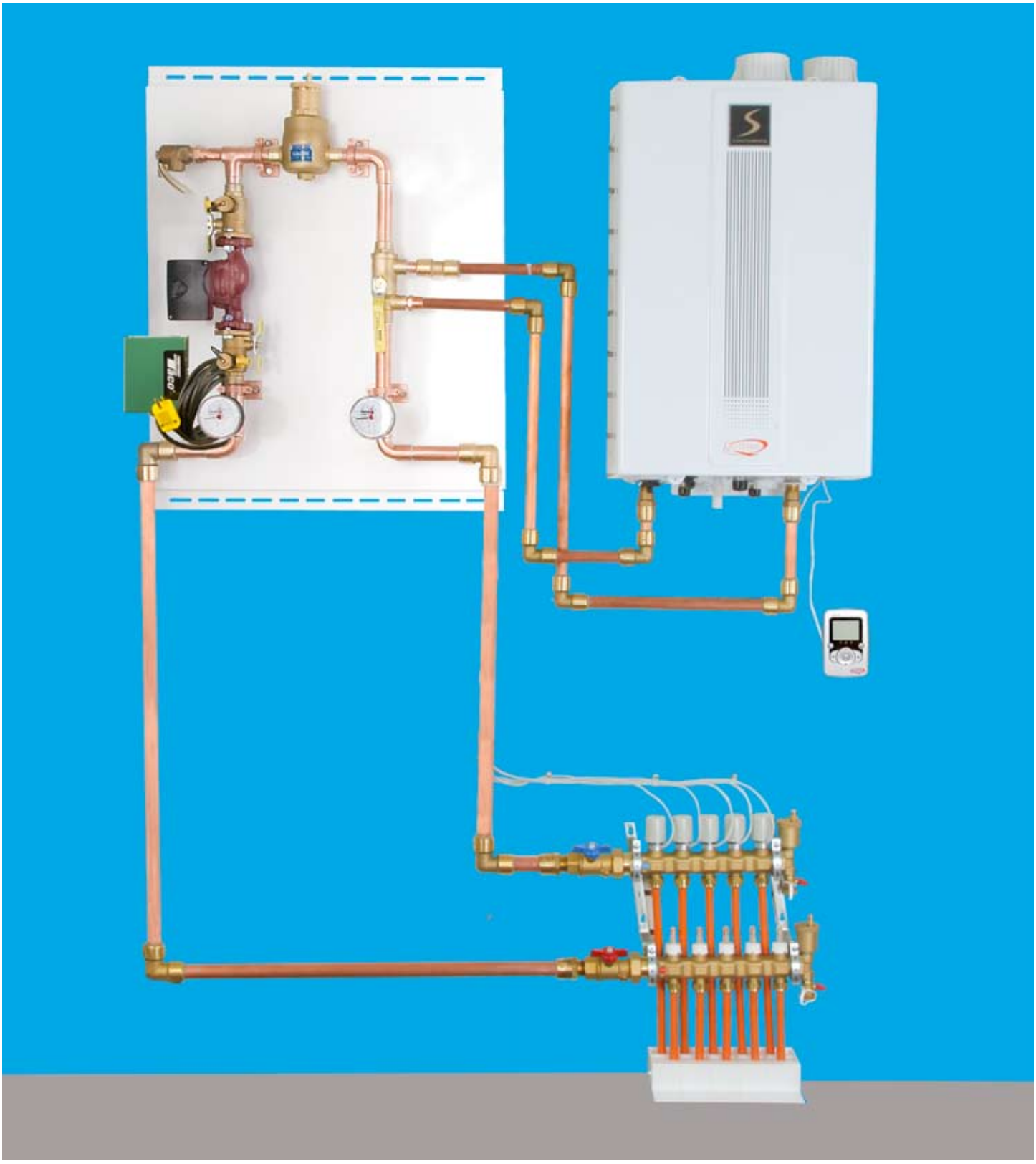

Quietside with HSPS120Q1 Integrator

I. FILLING THE SYSTEM

A. System is assembled, it is time to fill it.

B. Fill the system until there are no air bubbles in it. Air bubbles cause circulator pumps and element failures.

C. Purge the system one loop at a time. Open one loop with all of the other loops closed repeat down the manifold. Purge each loop until no air is seen in the discharge/fill tank.

PURGE TEES

OVERVIEW OF A TYPICAL SYSTEM

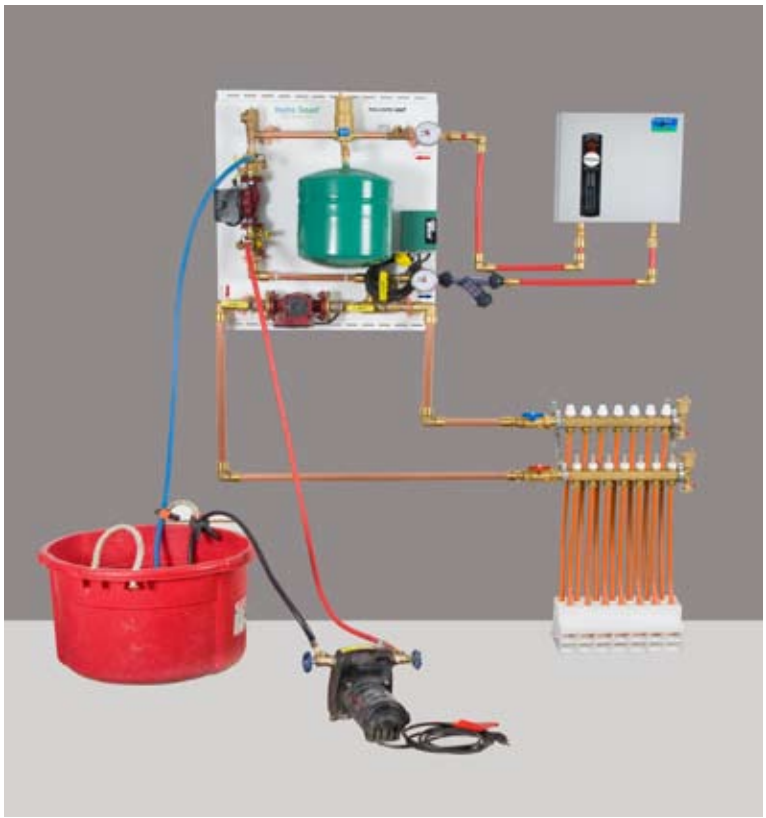

II. SOLUTION

A. The solution should be polypropylene glycol and city water
NOT: RV antifreeze - it is for non moving solutions and breaks down; automotive antifreeze - it is Toxic; well water - there is a bacteria in well water that in the presence of glycol and heat can turn into a bio-film, coat elements and plug up the boiler.

B. The mixture should contain more than 20% but less than 50% pure glycol. Increased glycol percentages increases the head pressure of the system. Proper flows through the system may not be reached as a result the boiler may not work; too little glycol promotes bacteria growth.

III. ATTACH HOSES

A. Obtain 3 washing machine hoses, one 20 gallon tub for mixing, and a transfer pump 1/2 HP or larger (not a sump-pump or a submersible pump)

1. Put one of the hoses into the mixing tub attach the other end to the intake of the fill pump.

2. Attach the second hose (red) to the discharge side of the pump and attach the other end to “A” the bottom gate valve on the lower flange of the primary circulator. The gate valve “A” should be in the open position while filling.

3. The ball valve on the lower Webstone flange should be in the Open position at this time. The ball valve handle “B” should be in line with the tubing.

4. Attach the third hose (blue) to valve “C” located above the primary circulator. Put the other end into the fill tub. This valve “C” should be open allowing water to circulate through the floor and all of the loops back to the bucket where it started. The bucket must have fluid in it at all times while filling. As the water returns the fluid may be milky, this is air in the solution. The fluid must be circulated until all air is removed and the water runs clear.

5. The ball valve “D” located on the upper flange should be closed during filling and Open when in operation.

6. If this is a primary/secondary system (2 pumps on the main panel) the purge valve should be in the vertical position “E” while filling. This forces the fluid through the floor, and prevents flow to the primary loop during the filling process. After the system is filled make sure that the purge valve “E” is open and in a horizontal position.

Note: If you have a Caleffi differential by-pass kit on your manifold you need to attach the fill hose to “C” and the discharge hose to “A’. This reverses the flow and allows you to still purge each loop individually and not open the by pass while filling.

FILLING HOSE CONNECTIONS

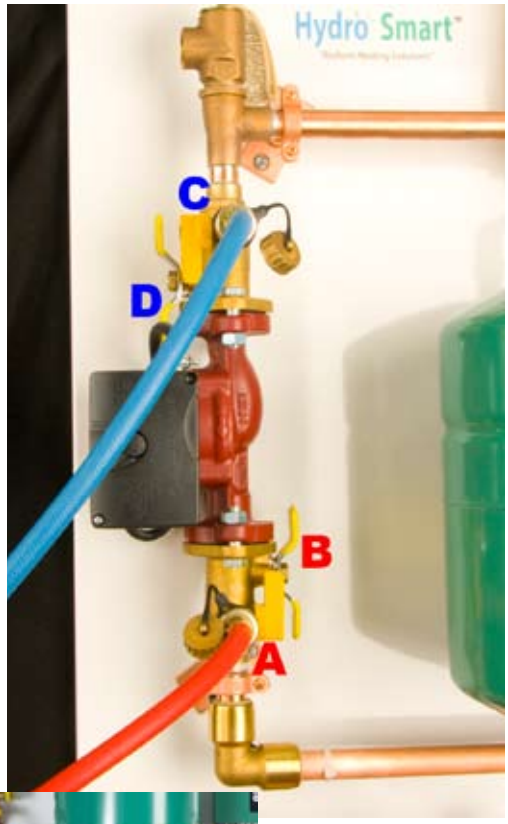

IV. DOMESTIC WATER FORCED FILL

A. Domestic water forced fill procedure

1. Attach the fill hose to the domestic city water supply, attach the other end to the gate valve “A” on the bottom flange of the primary circulator.

2. Attach the discharge hose to the gate valve “C” on the upper flange of the primary circulator. The other end of the discharge hose should be submerged in water prior to going into a drain.

3. Fill the system, watch for air bubbles in the discharge water.

4. Open each loop individually so the air can be purged from each loop separately. Watch your tub to see if any air bubbles are coming out of the solution while filling.

5. When no bubbles are seen, close the discharge line. When the pressure comes to 15-25 lbs, turn off the fill valve and shut off the water.

V. FINISH FILLING

A. Water has turned form milky to clear.

B. NO air bubbles are seen.

C. Close the discharge ball valve.

D. Keep pumping until pressure on the gauge is 15-20 lbs.

E. Turn off the fill valve.

F. Shut off the pump, the system should be free of air and at pressure.

VI. PRESSURE MAINTENANCE SYSTEMS FOR CLOSED LOOP SYSTEMS (Recommended)

A. Limited volume and unlimited volume

1. Use an Axiom system feeder for a pressure maintenance system that has a limited reserve. Limits any leak to 3 gallons.

2. Household water auto fill system. This is attached to the house water supply and has unlimited water flow. It has a pressure maintenance valve and a back flow preventer.

3. Must be either treated city water or a polypropylene glycol mix.

4. Either systems can be attached to the upper right fitting on the Flex-Pro panel for pressure maintenance.

FILLING THE SYSTEM

SYSTEM IN OPERATION

Taco
Webstone
Hydronic Expansion Tank
H2 PRO
FLEXCON
Model
HTX 30
Pre-charge
12 PSIG
Maximum Working
Pressure
160 PSIG
Temperature
240°F
08/10
TOOL SHOP

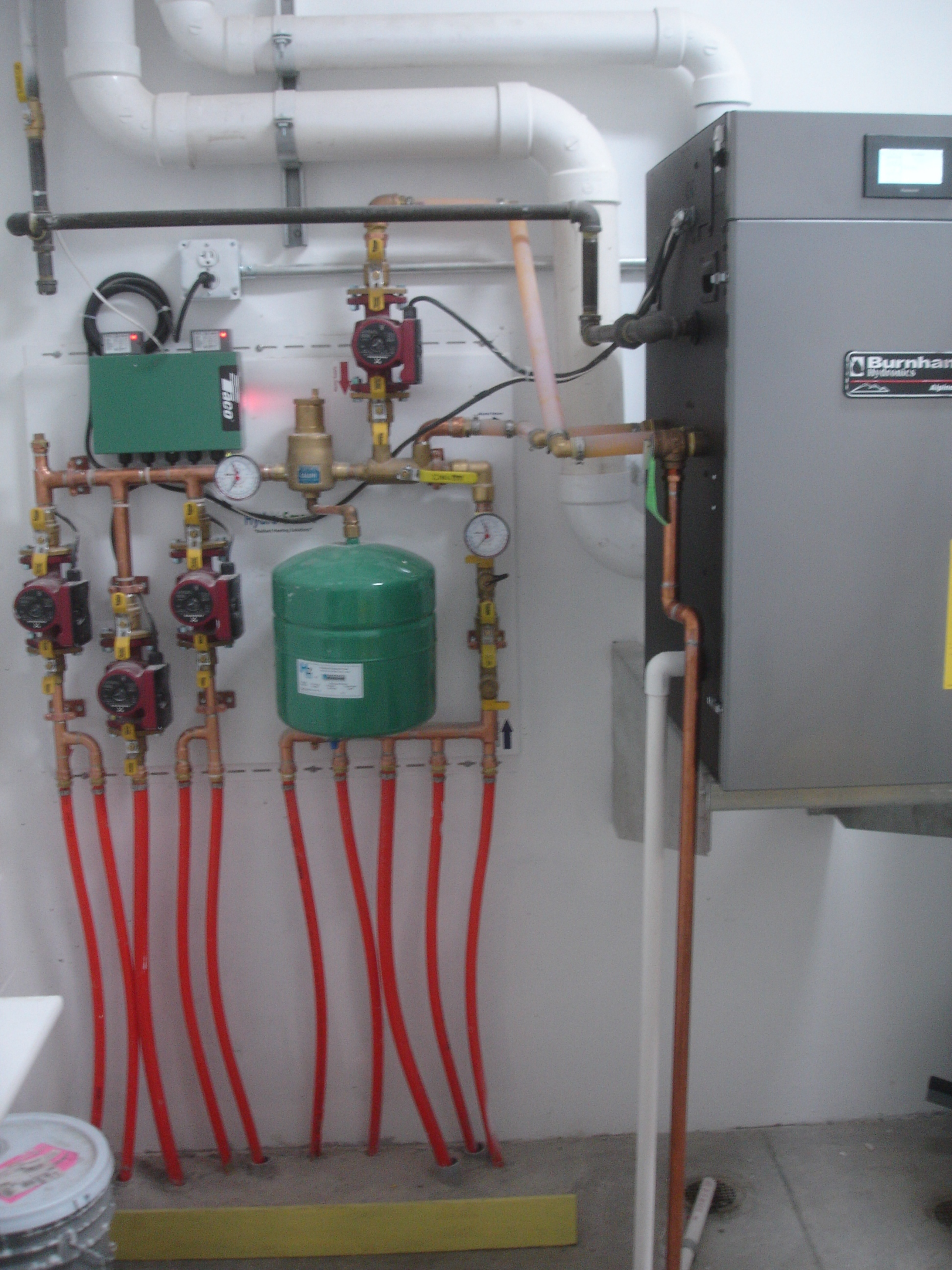
Taco
Burnham
Hydronics

NIBCO® PEX
RADIANT SYSTEMS

BARRIER-PEX FOR HYDRONIC SYSTEMS SUBMITTAL

1516 Middlebury Street • Elkhart, IN 46516
Ph: 800.234.0227 • Fax: 800.234.0557 • www.nibco.com

Project Name: _____
NIBCO Representative: _____
Unit Tag #: _____ Order by: _____ Date: _____
Engineer: _____ Submitted by: _____ Date: _____
Contractor: _____ Approved by: _____ Date: _____

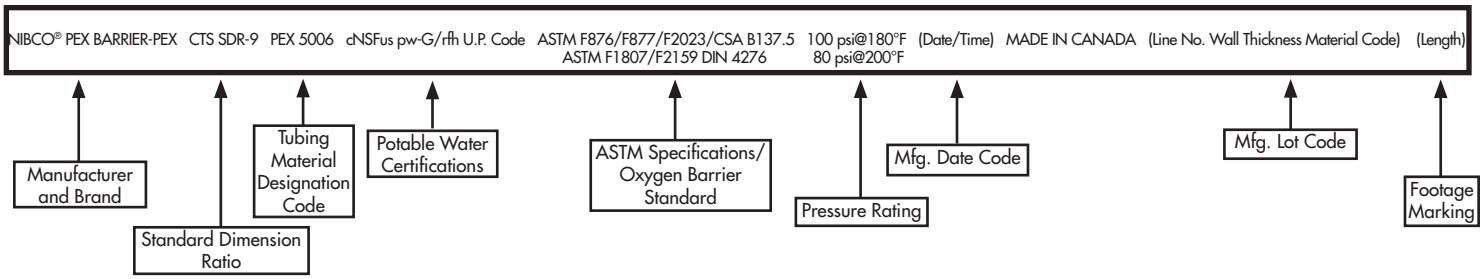

ENGINEERING SPECIFICATION

Material & Cross Linking: Tubing shall be made of cross-linked high density polyethylene. The PEX shall be made in copper tube size dimensions (CTS-OD) with a standard dimension ratio (SDR) of 9 controlling the wall thickness. The cross-linking method shall be accomplished by grafting organosilane molecules onto the base polyethylene chain by use of a catalyst blended with the resin before extrusion and then completed in a steam process. The oxygen barrier layer on the outside of the tubing shall be made of ethylene vinyl alcohol (EVOH). EVOH is highly resistant to the passage of oxygen.

Standards: Tubing shall meet the following standards:
- ASTM specifications of F 876 (Standard Specification for Crosslinked Polyethylene (PEX) Tubing)
- ATM F 877 (Standard Specification for Crosslinked Polyethylene (PEX) Plastic Hot- and Cold-Water Distribution Systems)
- DIN 4726.070 Oxygen Permeation
- NSF standards 61 and 14 as suitable for use with potable water

Performance: Pressure and temperature ratings shall be 80psi @ 200°F, 100psi @ 180°F, and 160psi @ 73°F. Oxygen permeation shall be less than .01grams/m3/day.

PRODUCT DESCRIPTION

NIBCO INC. BARRIER-PEX is cross-linked polyethylene tubing used to transport fluids in hydronic radiant heating/cooling/snow-melt systems where oxygen permeation into the system is not desired. This is important where ferrous metal components are used. Fluids in a radiant system shall be of a water or water/glycol mix. The tubing shall also be suitable for use in potable plumbing applications. The tubing may be placed in concrete, thin slab, sand, behind walls, and in or under wood flooring. BARRIER-PEX is an orange color to distinguish it from other types of PEX tubing and is available in multiple sizes in both sticks and coils.

PRODUCT DIMENSIONS

Size	Figure Number	Description	NOM. I.D.	O.D.	Volume gal. per 100′
½″	NP75	½″ Orange BARRIER-PEX	0.475″	⅝″	0.921
⅝″	NP75	⅝″ Orange BARRIER-PEX	0.574″	¾″	1.340
¾″	NP75	¾″ Orange BARRIER-PEX	0.671″	⅞″	1.837
1″	NP75	1″ Orange BARRIER-PEX	0.862″	1 ⅛″	3.025

OPERATING TEMPERATURE AND PRESSURE

The NIBCO INC. BARRIER-PEX tubing has a pressure rating of 80 PSI at 200°F, 100 PSI at 180°F and 160 PSI at 73°F.

MOLDED-STONE® MOP SERVICE BASIN

FIAT® PRODUCTS

MSB 3624 Accessories

TWO SIZES:
36" x 24" x 10" WITH SHELF (MSB-3624)
24" x 24" x 10" LESS SHELF (MSB-2424)

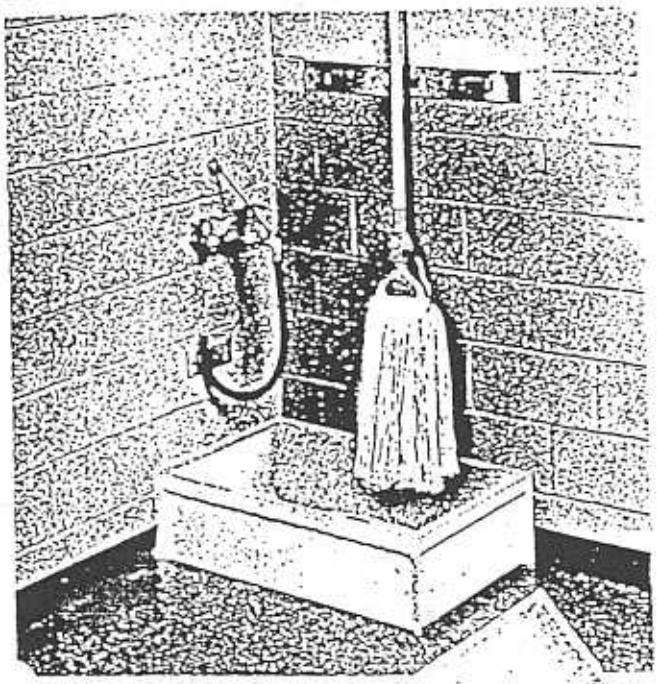

ODEL MSB-3624

OPTIONAL EQUIPMENT

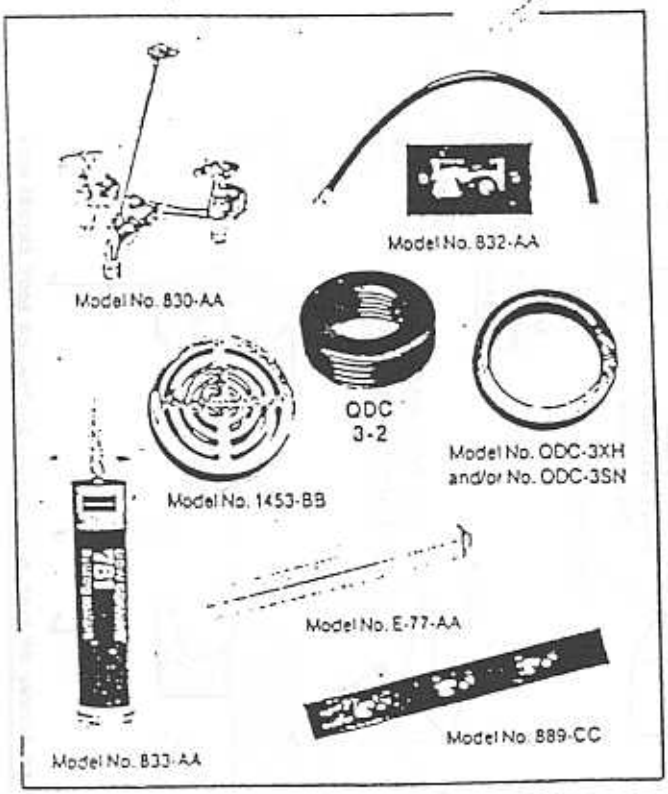

SPECIFICATIONS:

The MOP SERVICE BASIN shall be a Molded-Stone® product as manufactured by Fiat Products. The molding shall be done in matched metal dies under heat and pressure, resulting in a one-piece homogeneous product. Color: White.

Both models shall have 10" high walls with not less than 1" wide shoulders. MSB3624 only shall have an integrally molded shelf 10 9/16" wide where indicated. The factory installed drain body shall be stainless steel and designed to provide for a lead caulk or QDC-3 joint to a 3" drain pipe. A combination dome strainer and lint basket made from stainless steel shall be included. Also available with factory installed stainless steel drain body for lead caulked joint to accept a 2" pipe with optional flat strainer (Model No. 1453-BB) for residential use (Model Nos. EFS-3624 and EFS-2424).

SERVICE FAUCET: Model No. 830-AA-chrome plated with vacuum breaker, integral stops, adjustable wall brace, pail hook and ¾" hose thread on spout. Body inlets 8" center to center, four arm handles. Center of spout outlet from back of wall flange 8".

HOSE AND HOSE BRACKET: Model No. 832-AA-30" long flexible, heavy duty ⅝" rubber hose, cloth reinforced with ¾" brass coupling at one end. Bracket is 5" long x 3" wide, stainless steel with rubber grip.

MOP HANGER: Model No. 889-CC-24" long x 3" wide, stainless steel with three (3) rubber tool grips.

ALTERNATE STRAINER: Model No. 1453-BB-flat type stainless steel.

3" QUICK DRAIN CONNECTOR: Model No. QDC-3XH Neoprene connecting gasket suitable for attaching extra heavy cast iron soil pipe and Schedule 40 steel pipe (all with nominal O.D. of 3.50") to the drain body.

Model QDC-3SN Neoprene connecting gasket suitable for attaching hubless cast iron pipe (no hub, nominal O.D. of 3.31") and service weight cast iron soil pipe (nominal O.D. of 3.38") to the drain body.

QDC 3-2 QUICK DRAIN CONNECTOR: Neoprene connecting gasket facilitates for connection of 2" pipe to a 3" drain.

SILICONE SEALANT: Model No. 833-AA-standard 10.7 fluid oz. cartridge for use with open type, hand operated caulking gun. This permanent sealant is an elastomer vastly superior to conventional caulking compounds: will not crack, shrink or change color.

VINYL BUMPERGUARD: Model No. E-77-AA.

*See other side for wall guard information.

ROUGHING IN DETAILS

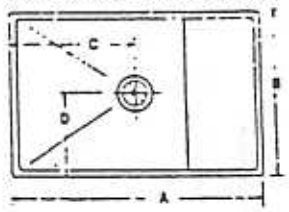

MODEL NO.	A	B	C	D	E
MSB 2424	24	24	12	12	10
MSB 3624	36	24	18	12	10

TYPICAL INSTALLATION

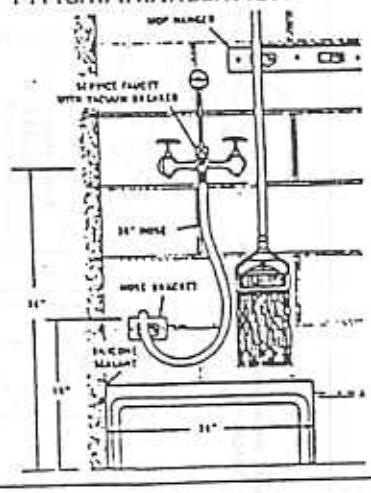

MOLDED-STONE®
MOP SERVICE BASIN

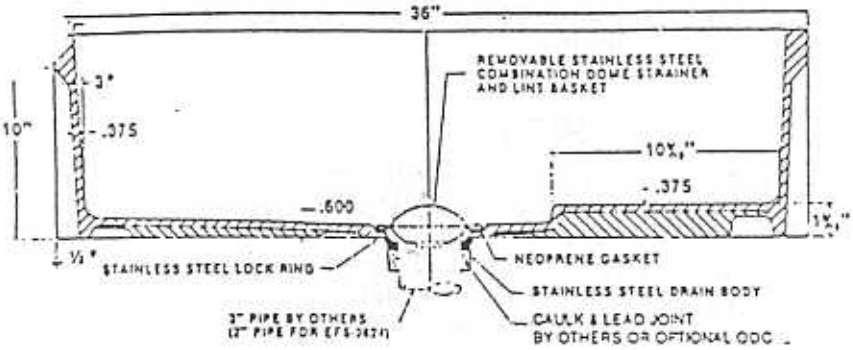

SECTION THRU DRAIN CONNECTION
MSB-3624 (WITH SHELF)

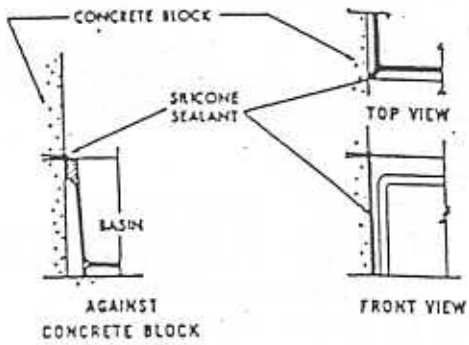

SUGGESTED INSTALLATION

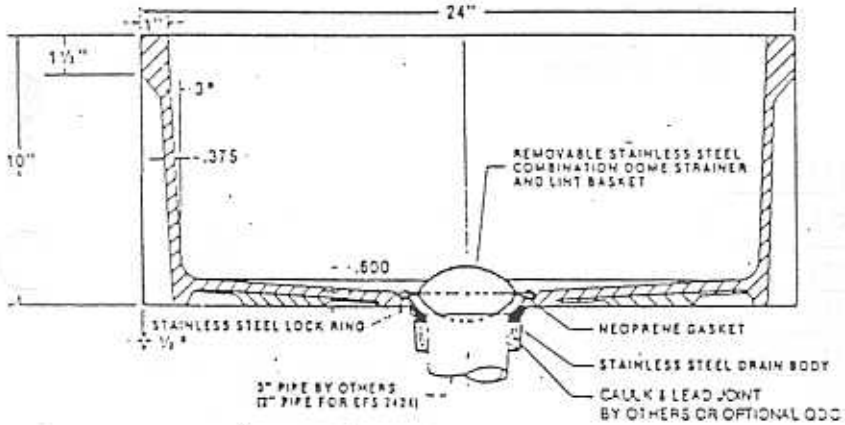

SECTION THRU DRAIN CONNECTION
MSB-2424 (LESS SHELF)
TYPE TO BE USED

MOP SERVICE BASIN FITTING
ROUGHING-IN DETAILS

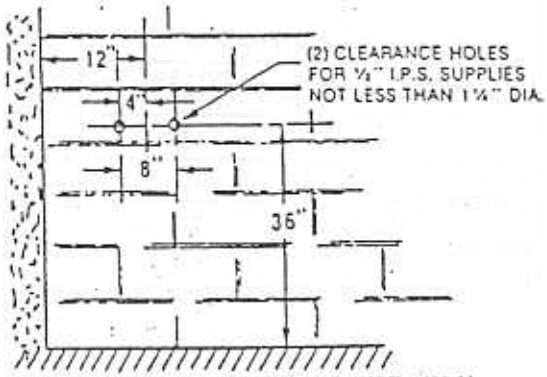

SUGGESTED ROUGH-IN FOR SERVICE FAUCET - MODEL #830-AA

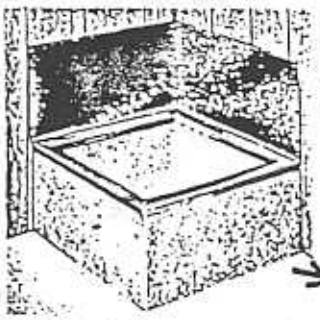

Wall Guard Shown
on Terrazzo Mop Basin

The Wall Guard is manufactured of heavy gauge stainless steel and is used to protect walls adjacent to Mop Basins. Two panels are supplied for corner installations, a third panel is required for a recessed installation.
MSG2424: MSG3232:
MSG3624: MSG3636.

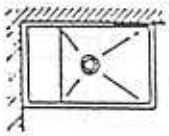

LEFT ROOM CORNERS

BOTH MODELS DESIGNED FOR COMPLETE INSTALLATION FLEXIBILITY (MODEL MSB-3624 SHOWN)

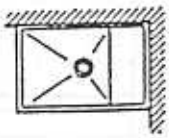

RIGHT ROOM CORNERS

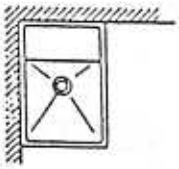

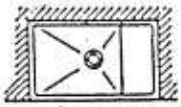

RECESSED

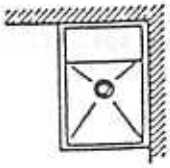

FIAT PRODUCTS
1235 HARTREY AVE.
EVANSTON, IL 60202
708-864-9777

©Copyright 1985
Printed in U.S.A.

ZURN®

AquaSense®

TAG menards

AquaSense Sensor Faucet

Suffix Options (Check/Specify Appropriate Options)

____	-A	2.0 GPM Vandal Resistant Aerator
____	-C	2.2 GPM Laminar Flow Control
____	-F	.5 GPM Vandal Resistant Aerator
____	-IA3	Inlet Adaptor (3/8"[10] compression)
____	-MJ	Mini Junction Box
____	-MT	Mixing Tee
✓	-MV	Temperature Mixing Valve
____	-SH	Supply Hoses for Mixing Valve
____	-SSH	Single Supply Hose
____	-TMV	Thermostatic Mixing Valve for Multiple Faucets
____	-TMV-1	Thermostatic Mixing Valve for Single Faucets
____		Other

☑ Z6915 AquaSense Battery Powered Faucet

ENGINEERING SPECIFICATION: The Z6915 sensor faucet is a battery powered sensor faucet with an integral four inch cover plate for retrofit and new construction. The faucet incorporates an infrared convergence-type proximity sensor into the chrome plated cast brass spout. The faucet is furnished complete with sensor module, spout module and in-line filter, 4 "AA" batteries, a 1.5 GPM vandal resistant aerator and an inlet for a 1/2"[13] ball riser supply hose. Sensor range is factory set for optimum performance.

☐ Z6915-ACA AquaSense Plug-In Powered Faucet

ENGINEERING SPECIFICATION: The Z6915-ACA sensor faucet is a plug-in powered electronic sensor faucet with an integral four inch cover plate for retrofit and new construction. The faucet incorporates an infrared convergence-type proximity sensor into the chrome plated cast brass spout. The faucet is furnished complete with sensor module, spout module, in-line filter, a 1.5 GPM vandal resistant aerator, 6 VDC plug-in power converter and an inlet for a 1/2"[13] ball riser or supply hose. Also included are 4 'AA' batteries that provide battery backup power to the faucet during power outages. Sensor range is factory set for optimum performance.

☐ Z6915-CWB AquaSense Hardwire Powered Faucet

ENGINEERING SPECIFICATION: The Z6915-CWB sensor faucet is a hardwired electronic sensor faucet with an integral four inch cover plate for retrofit and new construction. The faucet incorporates an infrared convergence-type proximity sensor into the chrome plated cast brass spout. The faucet is furnished complete with sensor module, spout module, in-line filter, a 1.5 GPM vandal resistant aerator, connecting wire to power converter and an inlet for a 1/2"[13] ball riser or supply hose. Also included are 4 'AA' batteries that provide battery backup power to the faucet during power outages. Sensor range is factory set for optimum performance.

NOTE: For Hardwire applications furnish P6900-HW6 power converter. The P6900-HW6 will power up to 8 sensor faucets. Order P6900-HW6 power converter seperately.

ZURN INDUSTRIES, INC. ♦ COMMERCIAL BRASS OPERATION ♦ 5900 ELWIN BUCHANAN DRIVE ♦ SANFORD NC 27330
Phone: 1-800-997-3876 ♦ Fax: 919-775-3541 ♦ World Wide Web: www.zurn.com
In Canada: ZURN INDUSTRIES LIMITED ♦ 3544 Nashua Drive ♦ Mississauga, Ontario L4V1L2 ♦ Phone: 905-405-8272 Fax: 905-405-1292

AquaSense® is a registered trademark of Zurn Industries, Inc.

TYPICAL Z6915 AquaSense Battery Powered Faucet

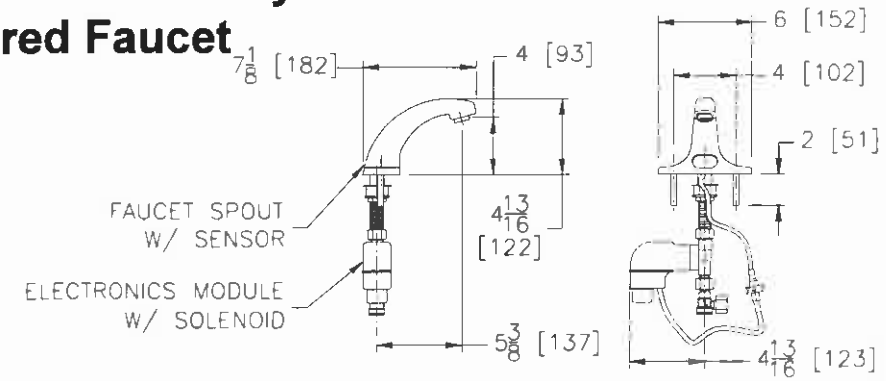

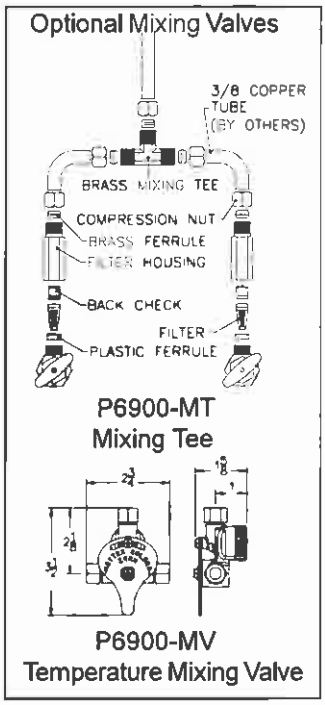

TYPICAL Z6915-ACA AquaSense Plug-In Powered Faucet

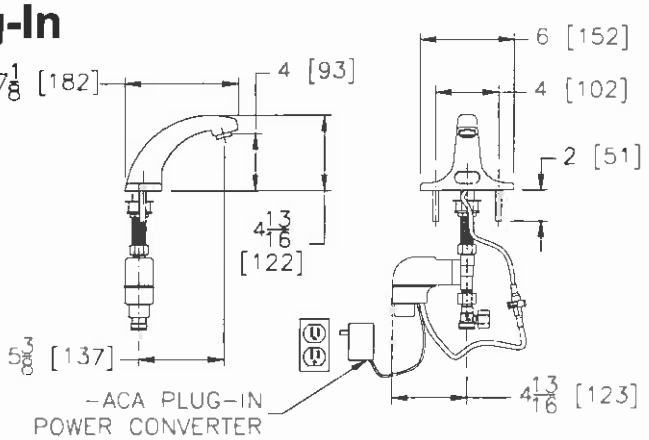

TYPICAL Z6915-CWB AquaSense Hardwire Powered Faucet

Optional:
* Optional -MJ mini junction box for connecting up to 8 faucets

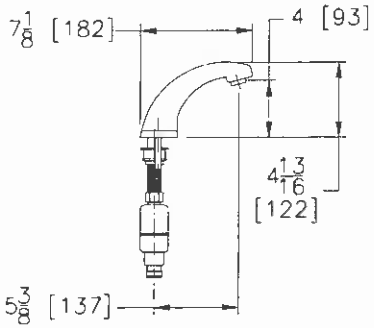

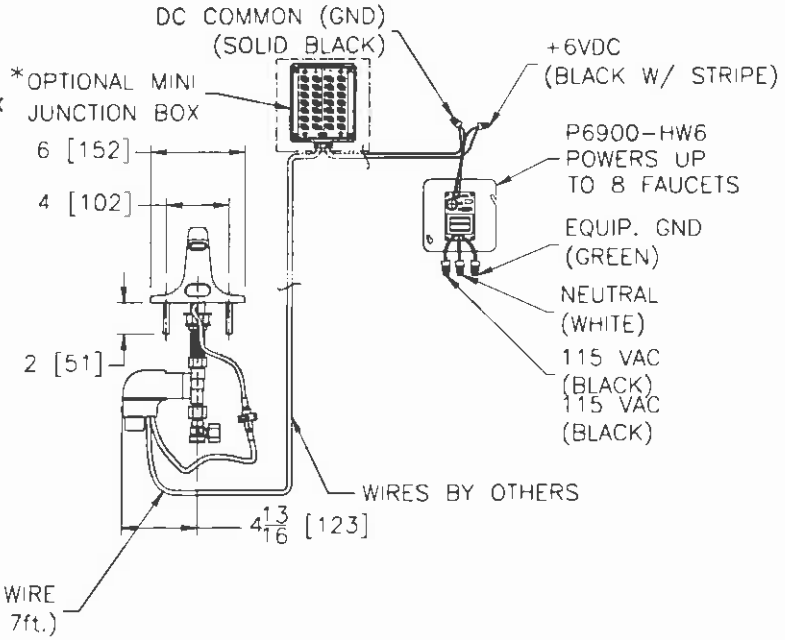

ZURN INDUSTRIES, INC. ♦ COMMERCIAL BRASS OPERATION ♦ 5900 ELWIN BUCHANAN DRIVE ♦ SANFORD NC 27330
Phone: 1-800-997-3876 ♦ Fax: 919-775-3541 ♦ World Wide Web: www.zurn.com
In Canada: ZURN INDUSTRIES LIMITED ♦ 3544 Nashua Drive ♦ Mississauga, Ontario L4V1L2 ♦ Phone: 905-405-8272 Fax: 905-405-1292

AquaSense® is a registered trademark of Zurn Industries, Inc.

AquaSense® AV™ Model

TAG WC-1 Menards

Exposed ZER6000AV-CPM Model

Sensor Operated Battery Powerd Flush Valve For Water Closets

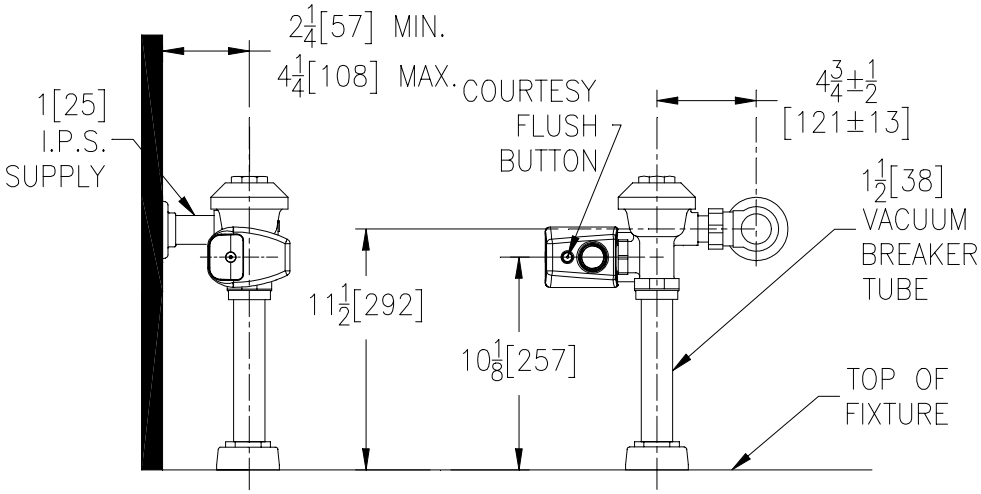

Flow Options

☑	-WS1	1.6 Gal. Low Consumption
☐	-FF	4.5 Gal. Full Flush
☐	Standard Flush	3.5 Gallons Per Flush

Suffix Options (Check/Specify Appropriate Options)

____	-YJ	Split Ring Pipe Support
____	-YK	Solid Ring Pipe Support
____	-YO	Bumper On Angle Stop
____		Other

ENGINEERING SPECIFICATION: ZURN ZER6000AV-CPM AquaSense 'AV' Exposed Closet Flush Valve - Exposed, quiet diaphragm-type, chrome plated flushometer valve with a polished exterior. Complete with Zurn's AquaVantage TPE, chloramine resistant, dual seal diaphragm with a clog resistant, triple filtered by-pass. The unit features a 6VDC motor actuator with automatic infrared sensor, user-in view L.E.D., low battery indicator light, switchable 24 hour auto-flush and three second delay flush to deter false flushing, 10 degree angled sensor for optimum user detection, courtesy flush button, high impact resistant polycarbonate housing, impact resistant glass lens and chrome plated metal cover. The unit comes complete with 4 "C" size batteries, wrench for installation and allen key for the battery compartment. The E-Z Flush electronics are ultra energy efficient for optimal battery life. This unit incorporates a high back pressure vacuum breaker, one piece hex coupling nut, adjustable tailpiece, spud coupling and flange for top spud connection. Control stop has internal siphon-guard protection, vandal resistant stop cap, sweat solder kit, and a cast wall flange with set screw. Internal seals are made of chloramine resistant materials.

This space is for Architectural/engineering Approval

ZURN INDUSTRIES, INC. ˝ COMMERCIAL BRASS OPERATION ˝ 5900 ELWIN BUCHANAN DRIVE ˝ SANFORD NC 27330
Phone: 1-800-997-3876 ˝ Fax: 919-775-3541 ˝ World Wide Web: www.zurn.com
In Canada: ZURN INDUSTRIES LIMITED ˝ 3544 Nashua Drive ˝ Mississauga, Ontario L4V1L2 ˝ Phone: 905-405-8272 Fax: 905-405-1292

AquaVantage and AV are trademarks of Zurn Industries, Inc.
AquaSense is a registered trademarks of Zurn Industries, Inc.

Rev.
Dwg. No. 66970
Date: 02/24/03
Product No. ZER6000AV-CPM

ZURN®

AquaSense® AV™ Model

TAG _____

Exposed ZER6003AV-CP Model

Sensor Operated Battery Powered Flush Valve For 3/4" Urinals

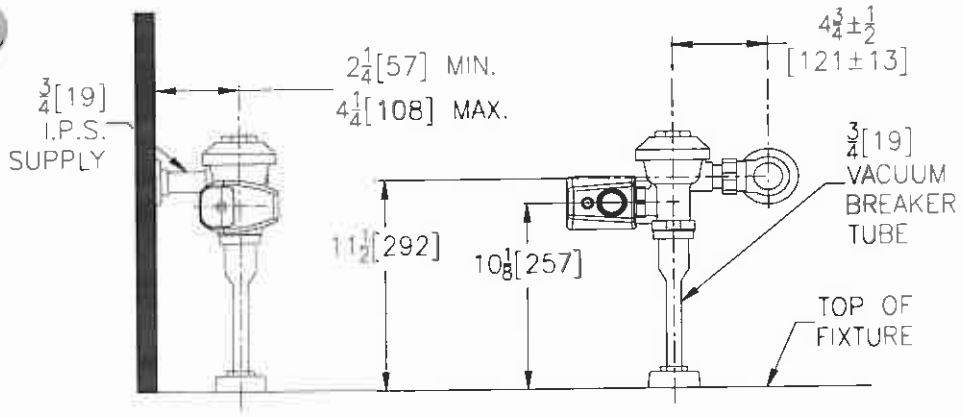

Flow Options

- ☐ **-WS1** 1.0 Gal. Low Consumption
- ☐ **-Standard Flush** 1.5 Gal. Full Flush

Suffix Options (Check/Specify Appropriate Options)

- _____ **-YJ** Split Ring Pipe Support
- _____ **-YK** Solid Ring Pipe Support
- _____ Other

ENGINEERING SPECIFICATION: ZURN ZER6003AV-CP AquaSense 'AV' Exposed Urinal Flush Valve - Exposed, quiet diaphragm-type, chrome plated, flushometer with a polished exterior. Complete with Zurn's AquaVantage TPE, chloramine resistant, dual seal diaphragm with a clog resistant, triple filtered by-pass. The valve incorporates a 6VDC motor actuator, a battery powered automatic sensor, high impact resistant polycarbonate housing and chrome plated ABS cover with manual override push button, high back pressure vacuum breaker, one piece hex coupling nut, adjustable tailpiece, spud coupling and flange for top spud connection. Control stop has internal siphon-guard protection, vandal resistant stop cap, sweat solder kit, and a cast wall flange with set screw. Internal seals are made of chloramine resistant materials.

This space is for Architectural/engineering Approval

ZURN INDUSTRIES, INC. ♦ COMMERCIAL BRASS OPERATION ♦ 5900 ELWIN BUCHANAN DRIVE ♦ SANFORD NC 27330
Phone: 1-800-997-3876 ♦ Fax: 919-775-3541 ♦ World Wide Web: www.zurn.com
In Canada: ZURN INDUSTRIES LIMITED ♦ 3544 Nashua Drive ♦ Mississauga, Ontario L4V1L2 ♦ Phone: 905-405-8272 Fax: 905-405-1292

AquaVantage and AV are trademarks of Zurn Industries, Inc.
AquaSense is a registered trademarks of Zurn Industries, Inc.

Rev. A
Dwg. No. 66575

Date: 08/28/02
Product No. ZER6003AV-CP

FASTDRY

Hand Dryer Series

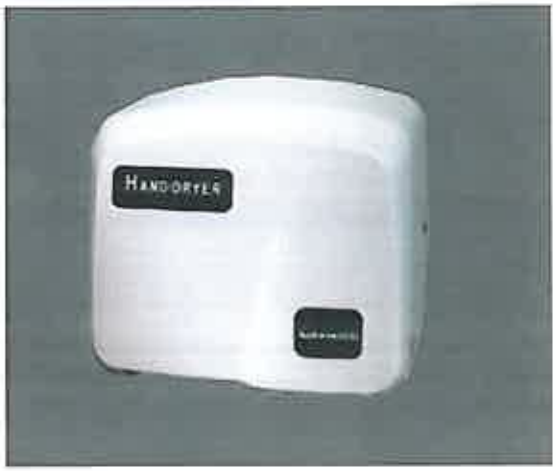

Description:HK-1800PA
Automatic operation hand dryer
Casing:made of high grade fire retardant
ABS, 3.0 mm thick
Brush motor:80W,2850 R.P.M.(50Hz)
3400 R.P.M.(60Hz)
Heater assembly:
Designed with 105°C(221°F)thermostat.
Designed with 87° C(200°F)thermostat.
Designed with 141°C(323°F)thermal cut-off.
Sound level:55 ± 3db
Air speed:16.5m/s--60Hz 14.5m/s--50Hz
Approximately 30-35 seconds drying time.

Dryer shall deliver 291 m^3/h(171CFM)--60Hz. 255 m^3/h(150CFM)--50Hz.
Adjustable timer control range from 10 to 30 seconds.
Power cut off automatically in case of irregular use over 120 seconds.
Drip proof:IPX1
WEIGHT: 3.8 kgs (8.4lbs) unpacked :4.5 kgs (9.9lbs) packed.

Specifications and Dimensions

				Housing Dimension : mm (in)		
Model	Volts	Watts	Amps	W	H	D
	120Vac	1800W	15A	268(10 1/2)	220(8 3/4	170(6 3/4)
HK-1800PA	220Vac	1800W	8.2A	268(10 1/2)	220(8 3/4	170(6 3/4)
	230/240Vac	1653-1800W	7.2-7.5A	268(10 1/2)	220(8 3/4	170(6 3/4)

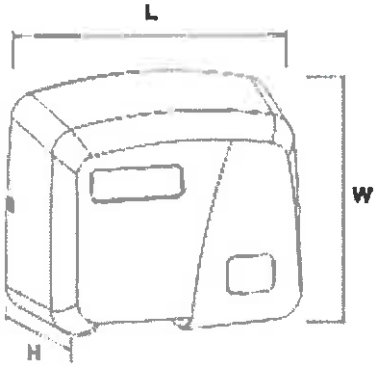

BACK

Limited Warranty

The HK1800PS/PA hand dryers shall be guaranteed to be free from defects for a period of five (5) years. Warranty shall include factory (Allied Hand Dryer) performed labor as well as the repair or exchange of defective parts, at Allied Hand Dryer's option.

Z100

15 [381] DIAMETER MAIN ROOF DRAIN LOW SILHOUETTE DOME

SPECIFICATION SHEET

TAG _____

Dimensional Data (inches and [mm]) are Subject to Manufacturing Tolerances and Change Without Notice

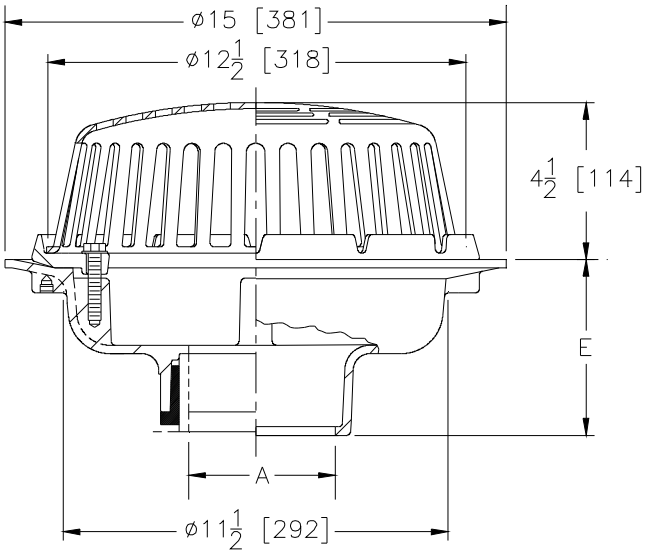

A- Pipe Size In.	Approx. Wt. Lbs. [kg]	Dome Open Area Sq. In. [cm²]
2-3-4 [51-76-102]	26 [12]	103 [665]
5-6 [127-152]	27 [12]	
8 [203]	28 [13]	

ENGINEERING SPECIFICATION: ZURN Z100
15 [381] Diameter roof drain. Dura-Coated cast iron body with combination membrane flashing clamp/gravel guard and low silhouette Poly-Dome.

OPTIONS (Check/specify appropriate options)

PIPE SIZE	(Specify size/type)	OUTLET		E BODY HT. DIM.	
2 thru 6-8 [51 thru 152-203]	____	IC	Inside Caulk	5 1/4	[133]
2 thru 6-8 [51 thru 152-203]	____	IP	Threaded	3 3/4	[95]
2 thru 6-8 [51 thru 152-203]	✔	NH	No-Hub	5 1/4	[133]
2-3-4 [51-76-102]	____	NL	Neo-Loc	4 5/8	[117]
6 [152]	____	NL	Neo-Loc	4 7/16	[112]

PREFIXES

- ✔ Z — D.C.C.I. Body with Poly-Dome*
- ____ ZA — D.C.C.I. Body with 6 3/4 [171] High Aluminum Dome
- ____ ZC — D.C.C.I. Body with Cast Iron Dome
- ____ ZRB — D.C.C.I. Body with Plain Bronze Dome

SUFFIXES

- ____ -AC — Angular Underdeck Clamp
- ____ -AR — Acid Resistant Epoxy Coated
- ____ -AW — 3/4 [19] to 4 [102] Adj. Water Level Regulator
- ____ -BS — Bronze Mesh Screen Over Dome
- ____ -C — Underdeck Clamp
- ✔ -DP — Top-Set® Deck Plate (Replaces both the -C and -R)
- ____ -DR — Top-Set® Drain Riser
- ____ -DX — Dex-o-tex Flange
- ____ -E — Static Extension 1 [25] thru 4 [102] (Specify Ht.)
- ____ -EA — Adjustable Extension Assembly 1 3/4 [44] thru 3 1/2 [89]
- ____ -EB — Top-Set® Adjustable Extension Assembly
- ____ -ES — Static Extension with Secondary Clamp at Body (for clamping at roof drain body)
- ____ -FG — Flush Grate (Replaces Dome Strainer)
- ____ -FS — Flat Strainer (ZB or ZN)
- ____ -G — Galvanized Cast Iron
- ____ -GD — Galvanized Cast Iron Dome (ZC Only)
- ____ -HD — 6 3/4 [171] High Aluminum Dome Strainer (148 Sq. In. [955 cm²] Open Area)
- ____ -R — Roof Sump Receiver
- ____ -SC — Secondary Clamping Collar
- ____ -SS — Stainless Steel Mesh Screen Over Dome
- ____ -TC — Neo-Loc Test Cap Gasket (2 - 4 [51 - 102] NL Bottom Outlet Only)
- ____ -VP — Vandal-Proof Secured Top
- ____ -W2 — 2 [51] Internal Water Dam
- ____ -W3 — 3 [76] Internal Water Dam
- ____ -W4 — 4 [102] Internal Water Dam
- ____ -XJ — Vertical Expansion Joint (See Z190)
- ____ -84 — Stainless Steel Perforated Gravel Guard
- ____ -85 — Stainless Steel Perforated Extension
- ____ -89 — 2 [51] High External Water Dam
- ____ -90 — 90° Threaded Side Outlet Body (2 thru 6 [51 or 152])

*REGULARLY FURNISHED UNLESS OTHERWISE SPECIFIED

REV. J **DATE: 5/24/07** **C.N. NO. 96513**

DWG. NO. 59285 **PRODUCT NO. Z100**

ZURN INDUSTRIES, LLC ♦ SPECIFICATION DRAINAGE OPERATION ♦ 1801 Pittsburgh Ave. ♦ Erie, PA 16514
Phone: 814/455-0921 ♦ Fax: 814/454-7929 ♦ World Wide Web: www.zurn.com
In Canada: ZURN INDUSTRIES LIMITED ♦ 3544 Nashua Drive ♦ Mississauga, Ontario L4V1L2 ♦ Phone: 905/405-8272 Fax: 905/405-1292

Z101
20 [508] DIAMETER MAIN ROOF DRAIN
LOW SILHOUETTE DOME

SPECIFICATION SHEET

TAG _____

Dimensional Data (inches and [mm]) are Subject to Manufacturing Tolerances and Change Without Notice

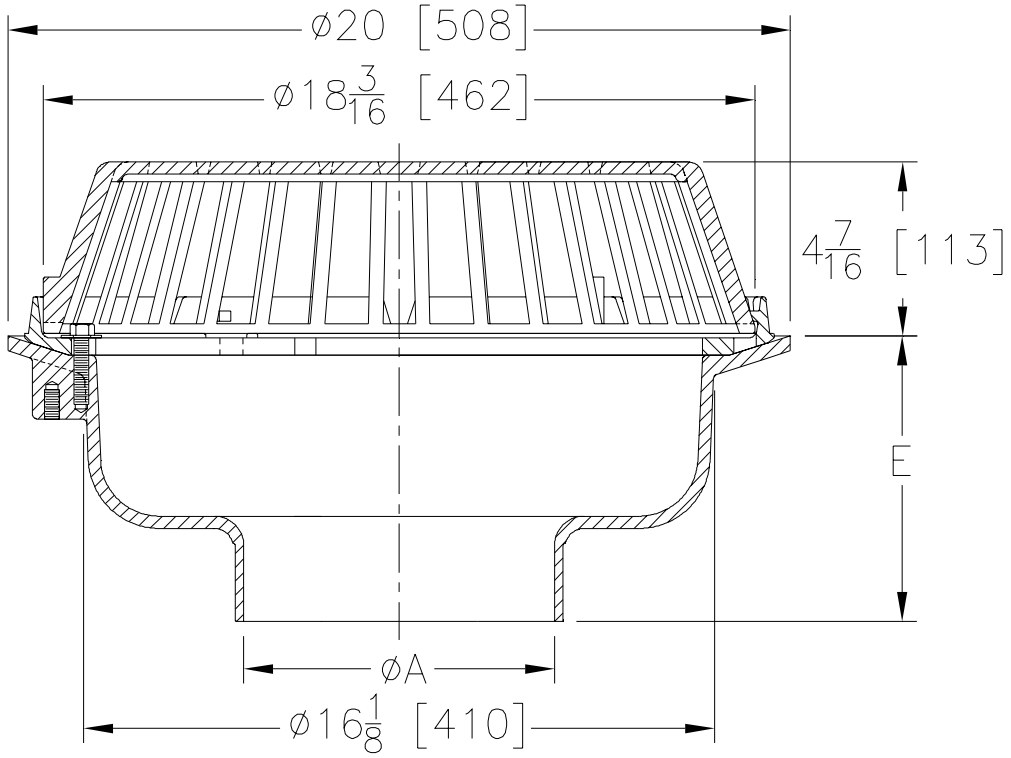

A- Pipe Size In.	Approx. Wt. Lbs. [kg]	Dome Open Area Sq. In. [cm^2]
8 [203]	77 [35]	216 [1394]
10 [245]	78 [35]	
12 [305]	79 [36]	

ENGINEERING SPECIFICATION: ZURN Z101
20 [508] Diameter roof drain. Dura-Coated cast iron body with combination membrane flashing clamp/gravel guard and low silhouette dome.

PIPE SIZE
8, 10, 12 [203, 254, 305]

(Specify size) **OUTLET**
____ NH No-Hub

'E' BODY HT. DIM.
7 5/16 [185]

PREFIXES

✔ Z D.C.C.I. Body with Cast Iron Dome*

SUFFIXES

- [ ] -AR Acid Resistant Epoxy Coated
- [✔] -DP Top-Set® Roof Deck Plate (Replaces both the -C and -R)
- [ ] -E Static Extension 1 [25] thru 4 [102] (Specify Height)
- [ ] -EB Top-Set® Adjustable Extension Assembly
- [ ] -G Galvanized Cast Iron
- [ ] -W2 2 [51] Internal Water Dam
- [ ] -W3 3 [76] Internal Water Dam
- [ ] -W4 4 [102] Internal Water Dam
- [ ] -89 2 [51] High External Water Dam

REV. E	DATE: 5/2/06	C.N. NO. 95080
DWG. NO. 61557	PRODUCT NO. Z101	

ZURN INDUSTRIES, INC. ♦ SPECIFICATION DRAINAGE OPERATION ♦ 1801 Pittsburgh Ave. ♦ Erie, PA 16514
Phone: 814/455-0921 ♦ Fax: 814/454-7929 ♦ World Wide Web: www.zurn.com
In Canada: ZURN INDUSTRIES LIMITED ♦ 3544 Nashua Drive ♦ Mississauga, Ontario L4V1L2 ♦ Phone: 905/405-8272 Fax: 905/405-1292

HYMONT™

3H701

17 ¼" High, Low Consumption Water Closet Bowl

Vitreous China

FEATURES

- ***3H701 Hymont™***

  Bowl: *3H701 Hymont™ (1.6 gpf / 6.0 lpf), 17 ¼" high, vitreous china elongated rim, siphon action, 1 ½" top spud bowl; bolt caps.*

  Valve: **Flushvalve with vacuum breaker, 1" angle screwdriver stop and flush connection. Suggested (1.6 gpf / 6.0 lpf) flushvalves are:*

Sloan "Royal"	*#111*
Delany "Flushboy"	*#F402-1.6*
Zurn "Aquaflush"	*#Z-6000-WS-1*

  Supply:

  Seat:

  Color:

NOTES

- *Fixture conforms to ANSI/ASME A112.19.2M standard.*
- ***For efficient operation of the bowl, a minimum flowing water pressure of 25 P.S.I. is required at the valve.*
- *Fixture complies with Americans With Disabilities Act.*
- Fully glazed trapway.

WATER ECONOMY FACTS

Average Gallons Per Flush	***25PSI*	*50 PSI*	*80 PSI*
3H701 Elongated Rim	*1.42*	*1.46*	*1.53*

TRAPWAY.....2"
WATER SURFACE.....9" x 8"
WATERSEAL.....3"

CRANE PLUMBING
Universal-Rundle

* Not furnished by CR/PL, L.L.C. Description for specification purposes only.

CR/PL© 12/02 Printed in U.S.A.

HYMONT™

17 ¼" High, Low Consumption Bowl

3H701

ADA COMPLIANCE

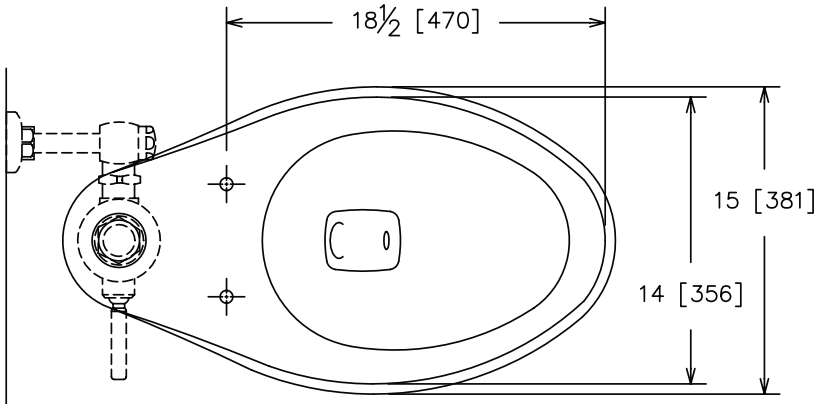

ROUGH–IN	A	B	C
10" [254]	10" [254] MIN.	3 1/2" [89]	28 1/16" [713]
12" [305]	12" [305]	5 1/2 [140]	30 1/16" [764]

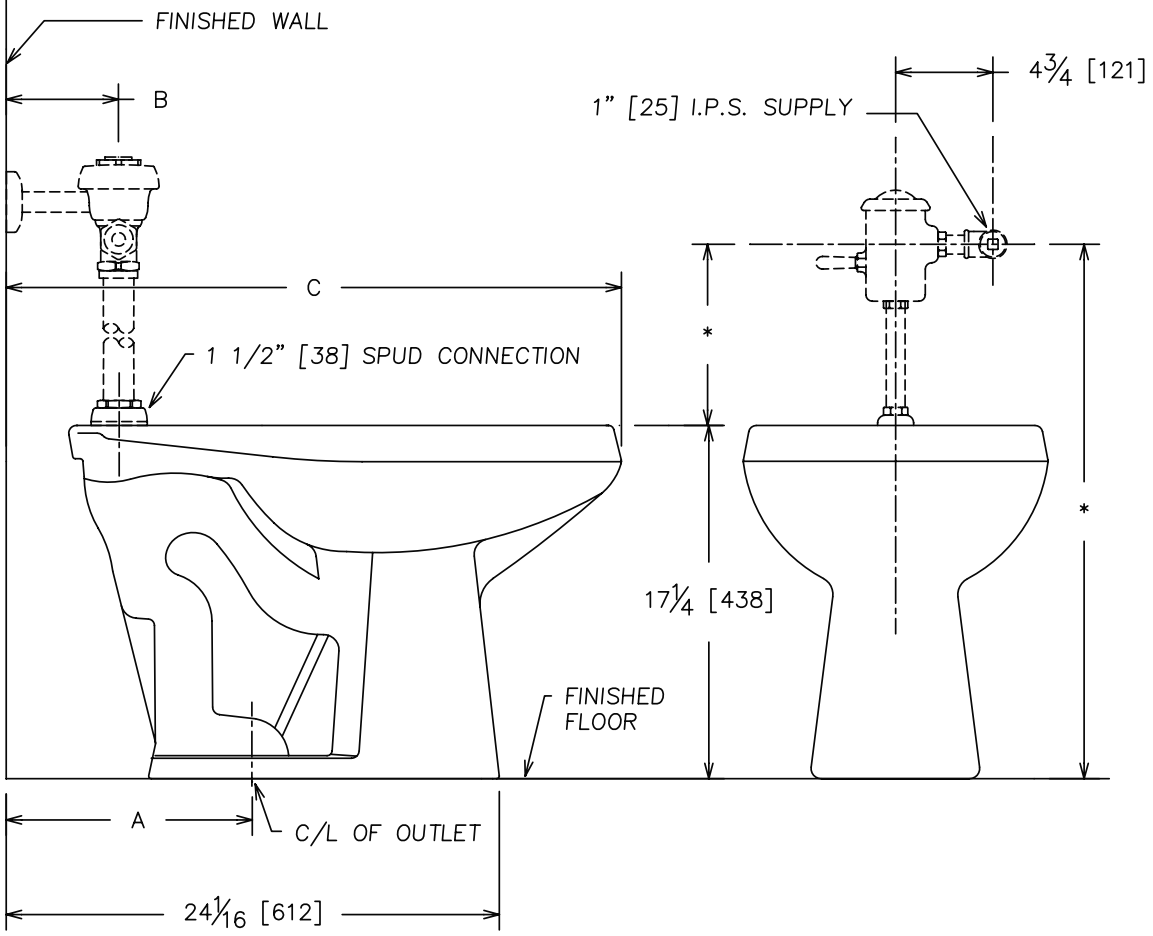

NOTE: * VARIABLE-CHECK WITH MANUFACTURER OF FLUSHVALVE FOR PROPER ROUGHING-IN DIMENSION.

CRANE PLUMBING
Universal-Rundle

IMPORTANT: Roughing-in dimensions may vary ½" and are subject to change or cancellation without prior notice. No responsibility is assumed for use of superseded or voided leaflets.

CR/PL© 12/02 Printed in U.S.A.

CRANE PLUMBING
The Clear Choice

Eco Whirlton™

3325

Elongated Front, 10″ [254 mm] - 12″ [305 mm] Flush Valve Bowl

Features

- *Environmentally Friendly*
- *This model meets ANSI requirements using:*
  - *1.28 gpf / 4.8 lpf Single Function Flush Valve*
  - *1.6 gpf / 6.0 lpf Single Function Flush Valve*
  - *1.1 gpf / 4.0 lpf to 1.6 gpf / 6.0 lpf Dual Function Flush Valve*
- *Qualifies for One [1] LEED Points when Using a 1.28 gpf / 4.5 lpf Single Function Flush Valve or a 1.1 gpf / 4.0 lpf to 1.6 gpf / 6.0 lpf Dual Function Flush Valve*
- *Large Water Surface Area*
- *10″ [254 mm] to 12″ [305 mm] Rough-in*
- *2″ [51 mm] Fully Glazed Trapway*
- *Available in White, Bone and Biscuit*
- *Limited Lifetime Warranty*

Model #	Description
3325	Elongated front, flush valve toilet. 10″ [254 mm] or 12″ [305 mm} rough-in. 1-1/2″ [38 mm] top spud. Less toilet seat and flushometer.

EcoSolutions®
The Green Choice

High Efficiency Toilet
HET

UPC
C ®

The Green Building / LEED programs was created to provide contractors, building engineers, developers and architects with incentives or rewards for utilizing energy saving and water conservation products in the construction or renovation of their buildings. The LEED program provides points or credits that can be used to offset elements of the construction that would be debits against the property. Using a 1.6 gpf / 6.o lpf toilets as the baseline, a HET toilet or HEU urinal that has a minimum average water savings of 20% can earn one [1] LEED point, or a minimum water savings of 32% can earn two [2] LEED points.

This fixture qualifies according to ASME test procedures as a high efficiency toilet (HET) with an average consumption of 1.28 gpf/ 4.8 lpf or less with a minimum water savings of 20%.

Eco Whirlton™ 3325

Specifications

Water Pressure Range: *35 to 80 P.S.I.*

Flush System: *Environmentally Friendly Flushing Technology*

Water Usage: *1.28 gpf / 4.8 lpf Single Function*
1.6 gpf / 6.0 lpf Single Function
1.1 gpf / 4.0 lpf to 1.6 gpf / 6.0 lpf Dual Function

Water Surface Area: *12″ x 10″ [305 mm x 254 mm]*

Trap Diameter: *2″ [51 mm]*

Water Seal: *3″ [76 mm]*

Shipping Cubes: *4.0 ft³ [.11 m³]*

Shipping Weight: *44 lbs [20 kg]*

Warranty: *Limited Lifetime*

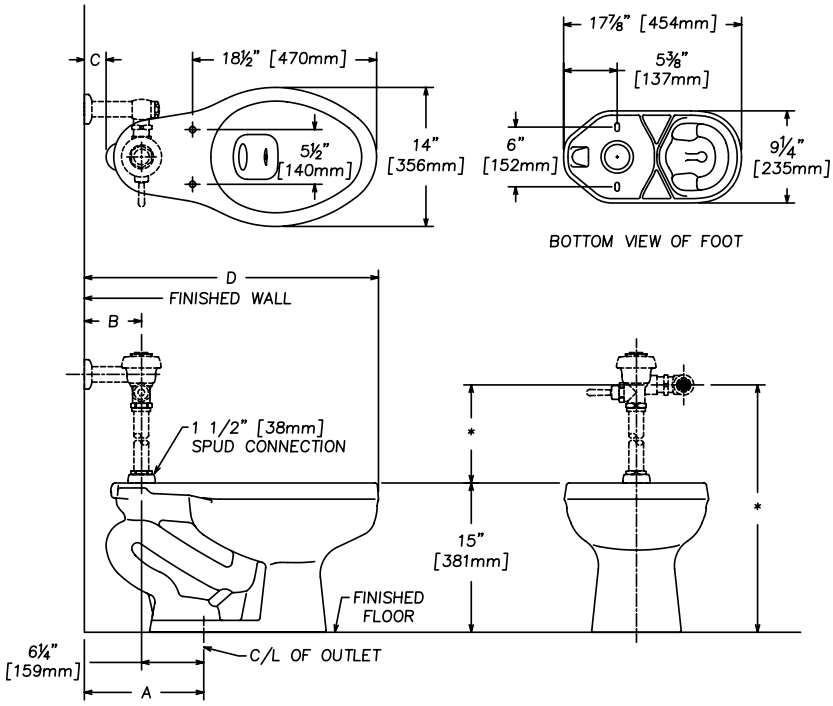

NOTE: * VARIABLE – CHECK WITH MANUFACTURER OF FLUSH VALVE FOR PROPER ROUGHING–IN DIMENSIONS.

DIM.	10" [254mm] R.I.	12" [305mm] R.I.
A	10" [254mm] MIN.	12" [305mm]
B	3 3/4" [95mm]	5 3/4" [146mm]
C	3/16" [5mm]	2 3/16" [56mm]
D	27 5/8" [702mm]	29 5/8" [752mm]

IMPORTANT: These dimensions are nominal and may vary within the range of tolerances established by ASME Standard A 112.19.2.

Customer Service United States
41 Cairns Road
Mansfield, OH 44903
Email: customerservice@craneplumbing.com

Customer Service Canada
15 Crane Ave.
Stratford, ON N5A 6T3
Email: sales@craneplumbing.ca

www.craneplumbing.com

www.craneplumbing.ca

Printed in USA 11/07

CRANE PLUMBING
The Clear Choice

The Whitman™

Design | Technology | Innovation

BRIGGS®

The Whitman™

19” x 17”
Wall-Mounted Lavatory

6619

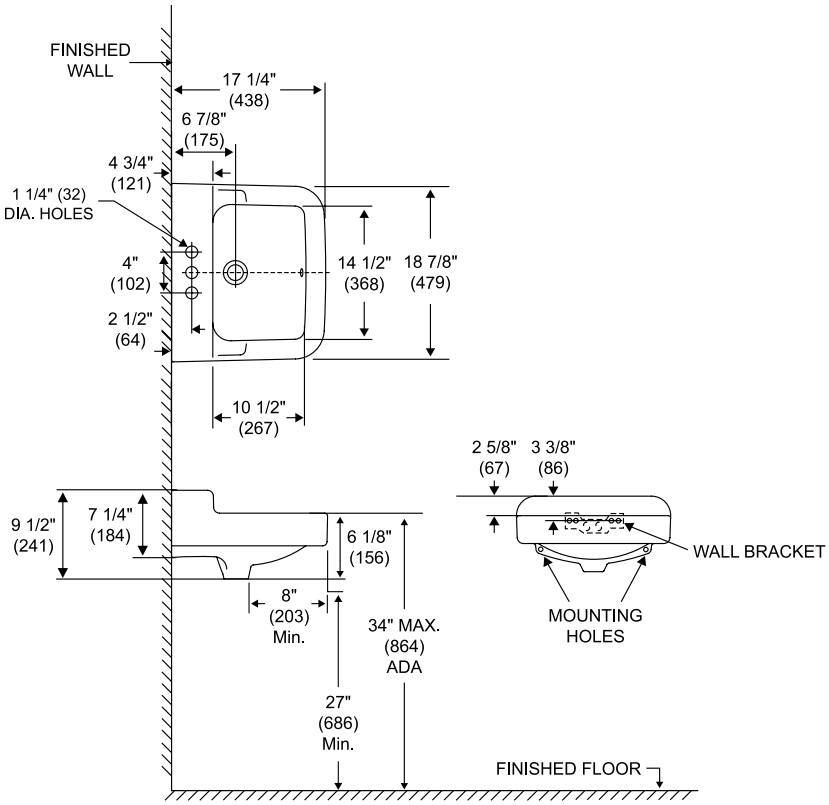

Dimensions may vary (+) or (–) 1/4”. Dimensions shown in parentheses are in millimeters: 25.4 mm = 1 inch. Note: Fixture dimensions are nominal and conform with dimension and performance requirements of ASME/ANSI Standards A112.19.2M. Dimensions subject to change or cancellation without notice. Briggs is not responsible for the use of superseded or voided specification information.

FEATURES

- Anti-splash rim
- Stain-resistant vitreous china
- 2 convenient soap depressions
- Concealed front overflow
- 5-year warranty

AVAILABLE COLOR

WHITE (130)

SPECIFICATIONS

- Model 6619: 4” centers; consists of wall-mounted lavatory basin, 31 lb

INSTALLATION

- Installation instructions supplied
- Wall hanger included for easy installation
- Installable under ADA standards

Design | Technology | Innovation

BRIGGS®

(800) 888-4458
www.briggsindustries.com

© 2007 Briggs Industries, Inc.

American Standard

Style That Works Better

BARRIER FREE

WASHBROOK® FloWise® UNIVERSAL URINAL

VITREOUS CHINA

WASHBROOK® FloWise® UNIVERSAL URINAL

- Vitreous china
- Ultra High Efficiency, Low Consumption. Operates in the range of 0.125gpf to 1.0gpf (0.5 Lpf to 3.8 Lpf)
- Flushing rim
- Elongated 14" rim from finished wall
- Washout flush action
- Extended sides for privacy
- 3/4" inlet spud
- Outlet connection threaded 2" inside (NPTF)
- 2 wall hangers
- Fixture only
- Strainer included
- Meets ASME flush requirements at 0.125 to 1.0 gpf

❏ **6590.001** Universal Top spud

❏ **6515.001** Universal Back spud

Nominal Dimensions:
360 x 480 x 664mm
(14-1/8" x 18-7/8" x 26-1/8")

Recommended working pressure – between 20 psi at valve when flushing and 80 psi static

Compliance Certifications -
Meets or Exceeds the Following Specifications:

- ASME A112.19.2-2008/CSA B45.1-08 for Vitreous China Fixtures

WaterSense
Meets EPA Criteria
Certified by IAPMO R&T
When used with 0.125 gpf or 0.5 gpf urinal flush valves

SEE REVERSE FOR ROUGHING-IN DIMENSIONS

To Be Specified:
❏ Color: ❏ White
❏ Flush Valve:

1.0 gpf Flush Valve: Sensor-Operated:
- ❏ American Standard Selectronic® #6063.101.002 DC Power (Top Spud)
- ❏ American Standard Selectronic® #6062.310.007 AC Power (Back Spud)

1.0 gpf Flush Valve: Manual-Operated:
- ❏ American Standard # 6045.101.002

0.5 gpf Flush Valve: Sensor-Operated:
- ❏ American Standard Selectronic® #6063.051.002 DC Power (Top Spud)
- ❏ American Standard Selectronic® #6062.305.007 AC Power (Back Spud)

0.5 gpf Flush Valve: Manual-Operated:
- ❏ American Standard #6045.051.002

0.125 gpf Flush Valve: Sensor-Operated:
- ❏ American Standard Selectronic® #6063.013.002 DC Power (Top Spud)
- ❏ American Standard Selectronic® #6062.301.007 AC Power (Back Spud)

0.125 gpf Flush Valve: Manual-Operated:
- ❏ American Standard #6045.013.002

© 2013 AS America Inc.

American Standard

Style That Works Better

BARRIER FREE

WASHBROOK® FloWise® UNIVERSAL URINAL

VITREOUS CHINA

6590.001 TOP SPUD

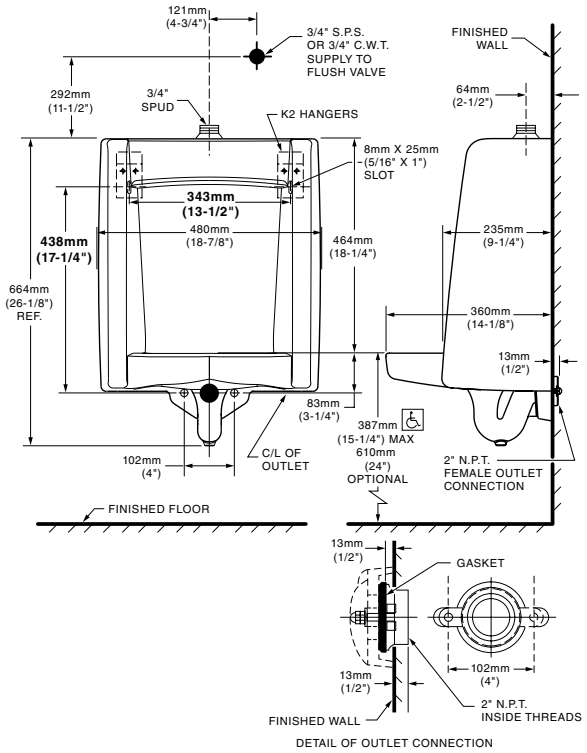

6515.001 BACK SPUD

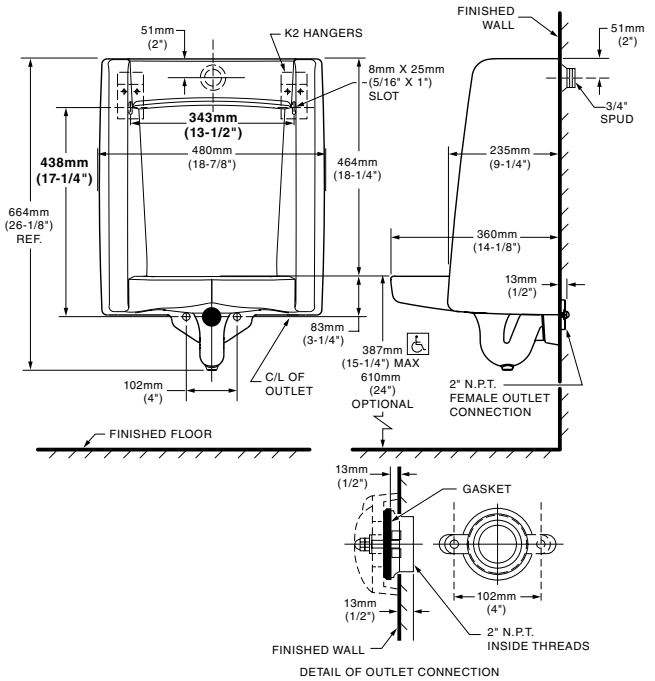

MEETS THE AMERICANS WITH DISABILITIES ACT GUIDELINES AND ANSI A117.1 ACCESSIBLE AND USABLE BUILDINGS AND FACILITIES - CHECK LOCAL CODES.

- When installed so top of rim is 387mm (15-1/4") from finished floor.

NOTES:
FLUSH VALVE NOT INCLUDED AND MUST BE ORDERED SEPARATELY.
PROVIDE SUITABLE REINFORCEMENT FOR ALL WALL SUPPORTS.

IMPORTANT: Dimensions of fixtures are nominal and may vary within the range of tolerances established by ANSI Standard A112.19.2. These measurements are subject to change or cancellation. No responsibility is assumed for use of superseded or voided pages.

© 2013 AS America Inc.

GAS EQUIPMENT COMPANY, Inc.

SINCE 1937

Ferrellgas DCL51DP-Hybrid-Bare Dispenser

Features:

- DCL51DP Large aluminum diamond-plate dispenser cabinet. Large enough to contain a Fairbanks 1,000# beam scale.
- Designed with same dimensions of Modular Skid Legs set: TL36 to mount from rear or either side if utilizing TL36 tank legs.
- Autogas/GasGuard 18’ Fuel Hose Kit mounted external of the cabinet with nozzle holster: MFH-GasGuard.
- Pomeco Spring activated fuel hose retractor and hose clamp.
- Cylinder filling Hose Kit inside the cabinet and mounted upstream of the meter to comply with Weights & Measures regulations: CFH Standard.
- Red-Seal Measurement-Neptune 1" 4D Meter Neptune #600 Mechanical Register and Veeder Root pulsar, capable of integrating with FMS.

The DCL51DP-Hybrid-Bare Dispenser can incorporate various pump/motor combinations. The common non-HDP pump/motor assembly for joint cylinder filling and Autogas dispensing is the Blackmer LGRLF1.25 (1-1/4”) pump with a 3HP motor.

Available Options:

- DU-3Way, 3-way valve and components when using 2 delivery hoses downstream of the meter.
- PK Kit, manual pneumatic actuator activation kit components.
- DURESS Kit, manual cable-closer kit to trip the thermal latch of an internal valve.
- CK, cable kit to allow manually opening of an internal valve from within the dispenser cabinet.
- #1124, 1,000 beam scale for cylinder filling.
- DUPK, cylinder vapor purging kit with purge exhaust pipe and tank regulator/fittings.

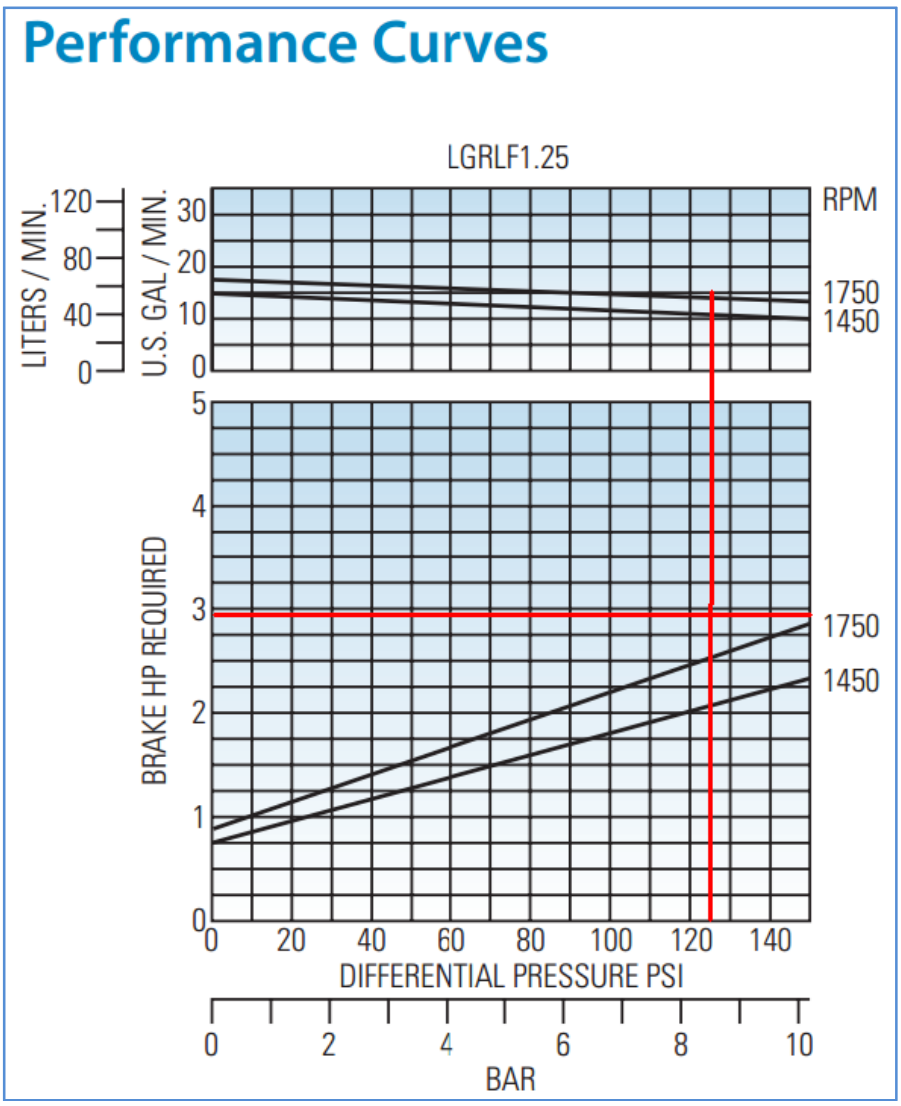

These curves are based on approximate delivery rates when handling propane at 80°F (26.7°C). Line restrictions such as excess flow valves, elbows, etc. will adversely affect deliveries. For propane at 32°F (0°C), actual delivery will be further reduced to about 80% of nominal. This loss of delivery is not a pump characteristic but is caused by natural thermodynamic phenomena of liquefied gases.

The LGRLF1.25 can be powered by either a three-phase motor (208-230/460V) or a single-phase motor (230V). Below is motor operating information.

3HP	Three-Phase	Single-Phase
Voltage	208-230/460	230
Amps	8.0/4.0	15
Frame	182TC	215C

Wire Sizing for this motor

Volts	100 FT	150 FT	200 FT	300 FT	500 FT
THREE-PHASE MOTOR					
230	12	10	10	8	6
460	12	12	12	12	10
SINGLE-PHASE MOTOR					
230	8	8	6	4	Consult Manual

This diagram is for the Blackmer LGRLF1.25 w/ 3HP, 1 phase motor ONLY
Three-Phase Wiring is similar and can be provided as needed.

WIRE SIZE for Single Phase Motors (230 volt) L1/L2 Conductors					
Horsepower	**100 ft.**	**150ft.**	**200 ft.**	**300 ft.**	**>300 ft**
3	**#8**	**#8**	**#6**	**#4**	Consult Manuals

WIRING DIAGRAM using the available GEC Pre-Wired Magnetic Starter with enclosure and motor control relays & ESO Switch: (4 Leads: 2-line voltage conductors to motor & 2-On/Off switch conductors to switch.)

NOTE: Since motor control circuits are operating at line voltage they may be able to be run inside same conduit with the motor conductors; BUT, Consult with a licensed electrician for your local regulatory compliance requirements.

Leaving Electrical Control Panel	**Connects To**
1. L1 Line	motor conductor
2. L2 Line	motor conductor
3. Lg Black dot Line:	On/Off Switch (In)
4. Sm Black dot Line:	On/Off Switch (Out)

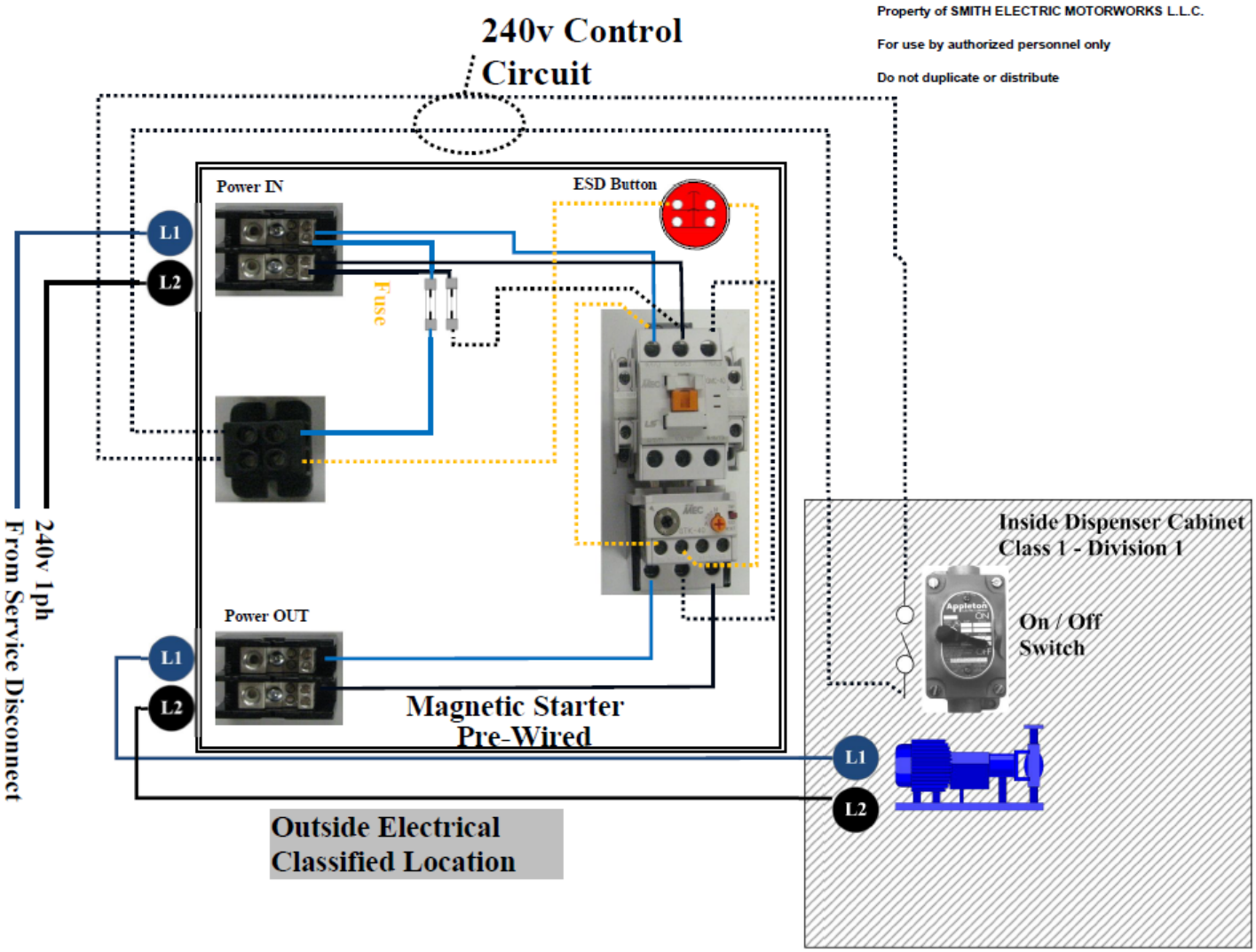

GEC - Dedicated to delivering knowledge and technology to maximize your people, operations, and profitability.

Electrical Control Panel showing ESO Switch on Cover.

GEC ECP Wiring Diagram w/ Fuelmaster Interface

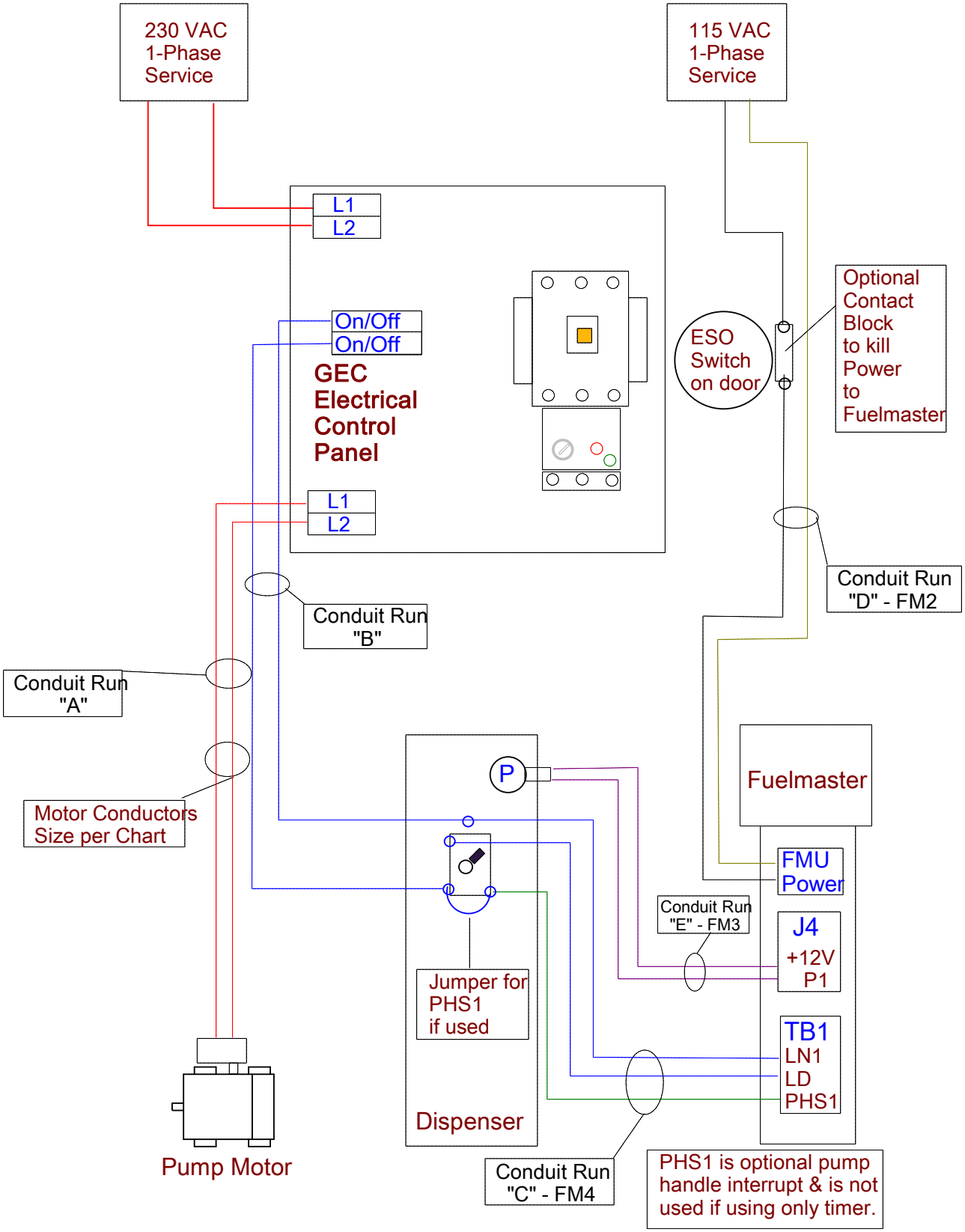

GEC ECP Wiring & Conduit Diagram w/ Fuelmaster Interface

Conduit Run	From	To	# of & Size of Wiring	Explanation
A	GEC Electrical Control Panel	Pump Motor	2 Total 2ea- Sized by distance chart	This is the motor conductors (2ea)(should be sized according to distance chart)
B	GEC Electrical Control Panel	Added J-box connected to Dispenser On/Off switch on wire-in side	2 ea. #12	This is the motor starter control circuit wires (2ea) to the On/Off switch. The hot wire from ECP ties to LN1 wire from Fuelmaster. The other ties to first pole, bottom lug of On/Off switch
C –FM-4	Added J-Box on Dispenser at On/Off Switch	Fuelmaster	3 ea. #12?	This has two circuits: 1-On/Off switch relay (2ea) from Fuelmaster once security has been satisfied. 1 to LN1 from ECP, 2nd from LD to first pole, top lug of On/Off switch. 2-Pump handle interrupt powered circuit, jumpered from STDP On/Off switch on bottom lug of switch to PHS1 in Fuelmaster.
D -FM-2	120V-1PH Service	Fuelmaster	3 ea. #12	Fuelmaster dedicated power supply (3ea) from an auxiliary circuit breaker panel mounted at the ECP at the service supply.
E –FM-3	Meter Pulsar	Fuelmaster	3 ea. #18	This the pulsar input circuit from the meter pulsar tot the Fuelmaster
F –FM-1	?	Fuelmaster	?	This is the Fuelmaster phone line or Cat 5 network

Following are the amperage ratings for the GEC panel:

1. Electrical Control Panel (see detail on Page 1-3)
    i. Motor Conductors L1 & L2 (this applies to the two each, two pole terminal blocks for service IN and motor conductors OUT to the motor)
        1. The motor is a 115/**230** volt single phase motor
        2. FLA rating is 30/**15 amps**
        3. Power wire and return wire for On/Off switch (less than 10 milliamps running)(this is a single loop)
2. See attachment labeled Model 600 Register Pulsar.pdf
    i. The wire size is referenced on page 2 for Model VR7697, (35 & 45)
    ii. #18 AWG
    iii. As per Alan's comments: "in a separate dedicated conduit".

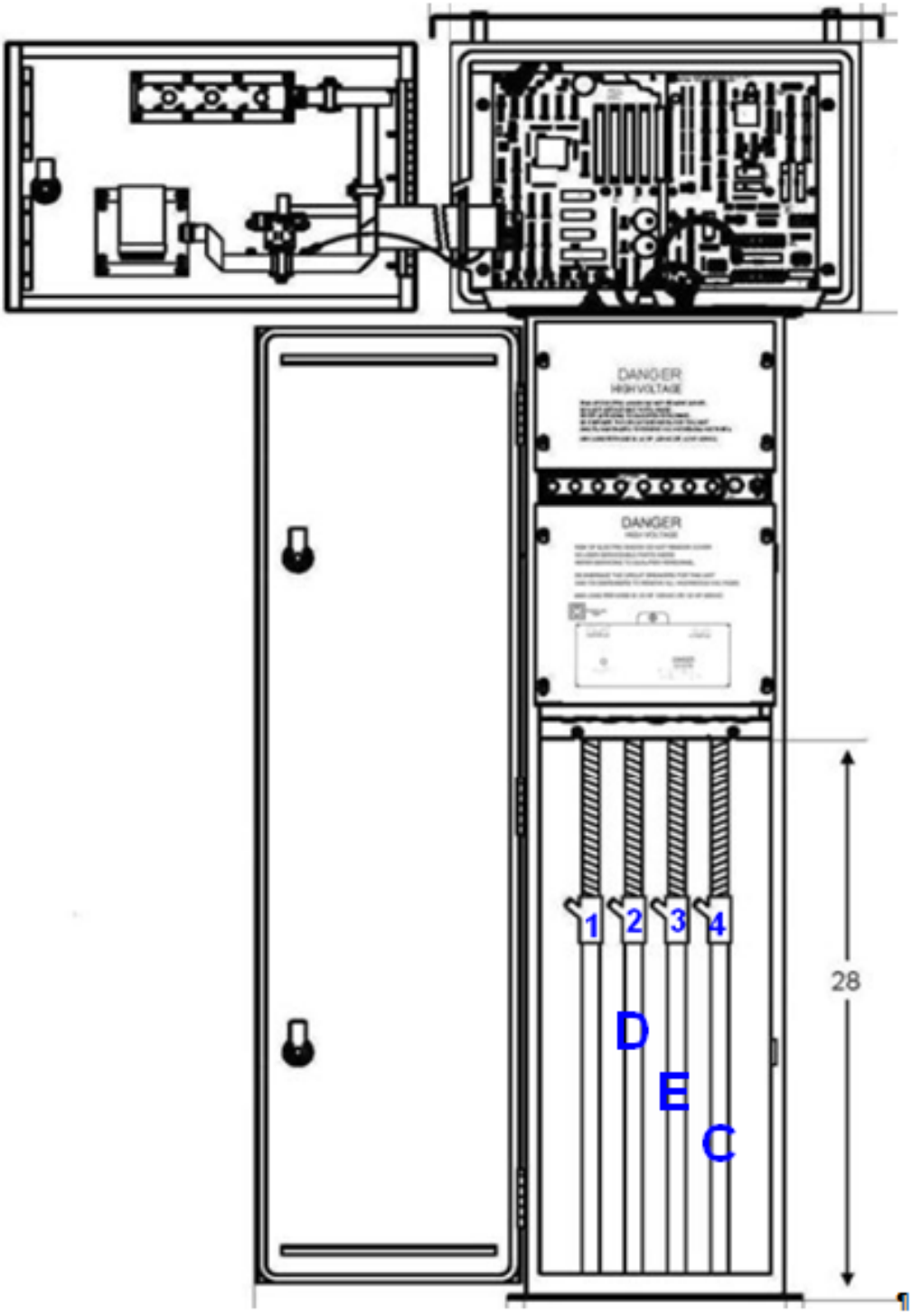

Conduit Run	Purpose
1	Phone Line or Cat 5 Network
2 – D	120VAC power in, (3 ea. - #12)
3 – E	Pulsar wire to pulsar Belden 8723
4 - C	Control wires (3 ea. - #12)

MAIN ROOF DRAIN

868 series

Item # Submitted _____
Job Name _____
Location _____
Engineer _____
Contractor _____
PO# _____ TAG _____

SPECIFICATION

Sioux Chief 868 Series cast iron main roof drains shall be used where necessary in drainage systems. Roof Drain shall have a low-profile enamel coated cast iron dome strainer, and cast iron gravel guard. Strainer shall turn-to-lock into gravel guard. Cast iron drain body shall have no-hub connection.

MATERIALS

dome strainer: enamel-coated cast iron
gravel guard: enamel-coated cast iron
drain body: enamel-coated cast iron

STRAINER FREE AREA

75.75 square inches

CONNECTION TYPE

cast iron no-hub

DIMENSIONS

A:	flange diameter	15"
B:	overall height	9.5"
C:	body height	5"
D:	body diameter	11.5"
E:	gravel guard diameter	13.625"

868-1504

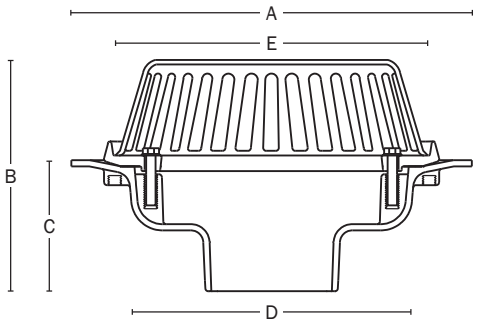

Create Item Number

868-A B

e.g. 868-1504US = 4" cast iron no-hub main roof drain with cast iron dome strainer, underdeck clamp, and sump receiver

A	CONNECTION SIZE
☐ 1503	3" no-hub
☐ 1504	4" no-hub
☐ 1506	6" no-hub
☐ 1508	8" no-hub

B	OPTIONS
☐ U	underdeck clamp kit
☐ S	sump receiver
☐ W	external water dam
☐ E	adjustable extension kit

ACCESSORIES

- ☐ 868-15U Underdeck clamp kit: two-piece cast iron clamping plate with hardware
- ☐ 868-15S Sump receiver: 24" × 24" × 15-gauge galvanized steel
- ☐ 868-15WD External water dam: 2" high, cast iron external water dam
- ☐ 868-15EXT Adjustable extension assembly kit

LARGE CAPACITY MAIN ROOF DRAIN

868 series

Item # Submitted _____
Job Name _____
Location _____
Engineer _____
Contractor _____
PO# _____ TAG _____

SPECIFICATION

Sioux Chief 868 Series cast iron large capacity main roof drains shall be used where necessary in drainage systems. Roof Drain shall have a low-profile enamel coated cast iron dome strainer, and cast iron gravel guard. Strainer shall turn-to-lock into gravel guard. Cast iron drain body shall have no-hub connection.

MATERIALS

dome strainer: enamel-coated cast iron
gravel guard: enamel-coated cast iron
drain body: enamel-coated cast iron

STRAINER FREE AREA

178 square inches

CONNECTION TYPE

cast iron no-hub

DIMENSIONS

A: flange diameter	20"
B: overall height	11.75"
C: body height	7.375"
D: body diameter	16.125"
E: gravel guard diameter	19"

868-2010

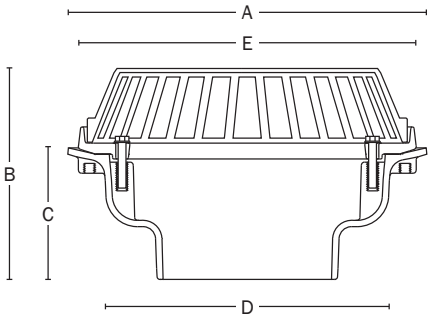

Create Item Number

868-A B

e.g. 868-2012US = 12" cast iron no-hub main roof drain with cast iron dome strainer, underdeck clamp, and sump receiver

A	CONNECTION SIZE
□ 2010	10" no-hub
□ 2012	12" no-hub

B	OPTIONS
□ U	underdeck clamp kit
□ S	sump receiver
□ W	external water dam

ACCESSORIES

- □ 868-20U Underdeck clamp kit: two-piece cast iron clamping plate with hardware
- □ 868-20S Sump receiver: 30" × 30" × 10-gauge powder-coated steel
- □ 868-20WD External water dam: 2" high, cast iron external water dam

WOODFORD

Backflow Protected
Freezeless Wall Hydrants
Model 65/B65/RB65

The Model 65, B65 & RB65 are automatic draining, freezeless wall hydrants with hose connection anti-siphon vacuum breakers. Hydrants drain as handle is shut off, *even if hose is attached.* All models are designed to blend in with modern architecture for installation on restaurants, schools, office buildings, churches, apartments, motels, stores, shopping centers and industrial buildings.

SPECIFICATIONS:

MODEL 65/B65/RB65 -
- Approved under ASSE Standard 1019-B
- Listed by IAPMO®
- Meets Government Specification WW-P-541b

VACUUM BREAKER - ANTI SIPHON -
- NIDEL® Model 34HA with ¾ inch male hose thread
- Approved under ASSE 1011
- Listed by IAPMO®

VALVE SEAT – Permanent type brass valve body with hemispherical sealing surface.

VALVE – One piece valve plunger accurately controls both flow and drainage with a minimum number of turns and without need for adjustments.

DRAIN – Under nozzle away from hands of operator and with a lip to divert water away from building.

CASING – Copper tubes.

NO LEAD SOLDER - All solder joints.

STEM – Hardened stainless steel stem resists damage.

TEE KEY – Loose key operates hydrant.

OPERATING ROD – 3/8" solid brass operating rod.

INLETS – As shown.

WALL CLAMP – Furnished on all 60 series except close coupled.

MAX PRESSURE – 125 p.s.i.

MAX TEMPERATURE - 120° F

Inlet Options

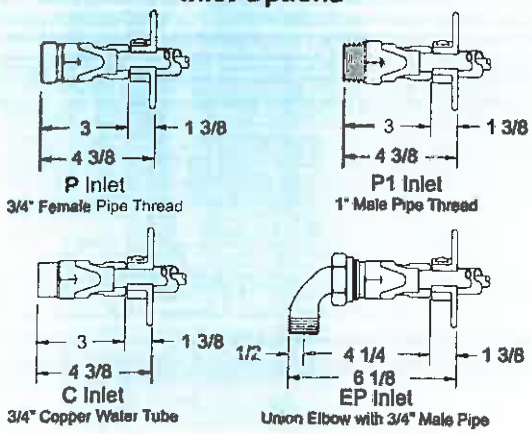

Specify as follows:

Wall hydrant shall be Woodford Model 65 (exposed type), B65 or RB65 (concealed box type), automatic draining with anti-siphon vaccum breaker. ASSE Standard 1019-B approved. ¾" inlet and outlet (specify type of Inlet). Hardened stainless steel operating stem and one-piece valve plunger to control both flow and drain functions. Exterior finish to be Chrome Plated (options: Polished Brass or Rough Brass). Loose tee key to be furnished with each hydrant. Wall thickness to be _____ inches.

MODEL 65

Exterior Finish:
~~Standard - Chrome (CH)~~
Optional - **Brass (BR)** Polished Brass (PB)
Fits **one standard modular** brick course.

MODEL B65

Exterior Finish: **Box & Door**
Standard - Chrome (CH)
Optional - Brass (BR) Polished Brass **(PB)**
Anodized Aluminum Box (AL)
Fits two std. modular brick course or one course of facing **tile.**

MODEL RB65

Exterior Finish: Box & Door - Chrome (CH) Only
Designed especially for tilt-up wall construction.
Install through 6" diameter hole.
Two 3/8"-16 tapped holes for all-thread anchors in back of box. Lift and latch door stays open when hydrant is in use.

When ordering, specify model, inlet and wall thickness

©2009 WOODFORD Mfg.

Rev. 05/09 Form No. 65.107

WOODFORD MFG. CO. 06 96 15p VALVES

WOODFORD

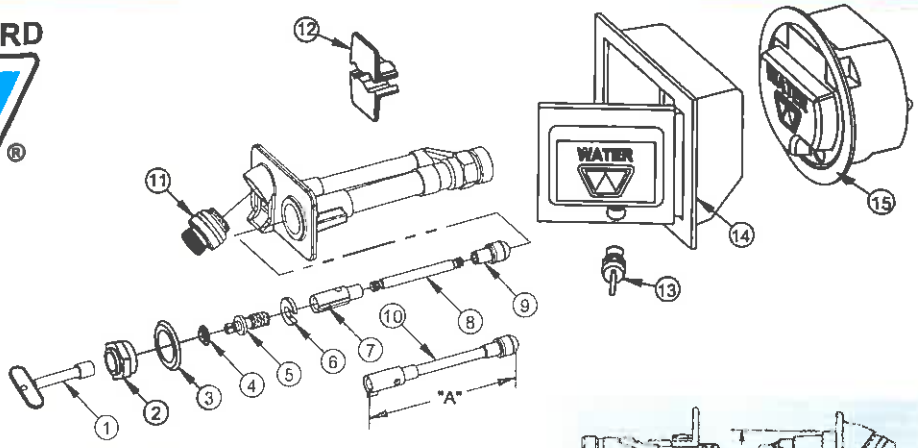

Woodford Excellence Since 1929
Proudly Made in the U.S.A.

MODEL 65/B65/RB65 PARTS LIST

ITEM	PART #	DESCRIPTION
1	50009	Tee Key
	50010	Long Tee Key (Box Models)
2	50264	Head Nut – chrome
	50265	Head Nut – brass
3	50583	I.D. RING
4	50252	Stem Washer
5	55062	Stem Screw
6	50251	"C" washer
7	51014	Yoke Nut
8	Operating Rod (Sold With Item 10 Only)	
9	50250	Plunger
10	554XX	Operating Rod Assembly (Includes Items 7,8,9)
	(Select required assembled length from table below)	
11	34HA-CH	34HA Vacuum Breaker – chrome
	34HA-BR	34HA Vacuum Breaker – brass
12	55063	Wall Clamp Assembly
13	51081	Cylinder Lock – Chrome Only
14	65BX	Box/Door Assembly – Chrome
	65BX-BR	Box/Door Assembly - Brass
	65BX-PB	Box/Door Assembly – Polished Brass
	65BX-AL	Box/Door Assembly – Aluminum
15	RB-BX	Round Box/Door Assembly - Chrome
	RK-65	Chrome Repair Kit (Includes Items 1-7 & 9)

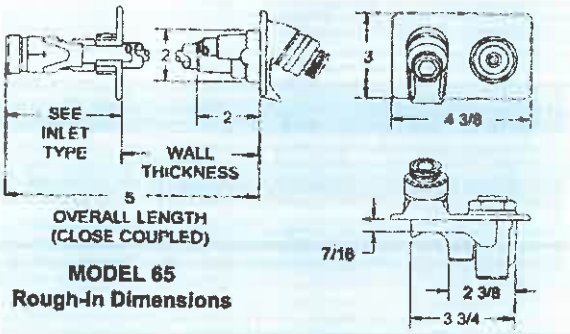

MODEL 65
Rough-In Dimensions

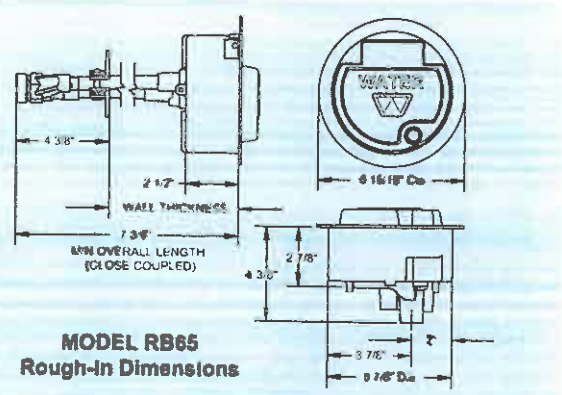

MODEL RB65
Rough-In Dimensions

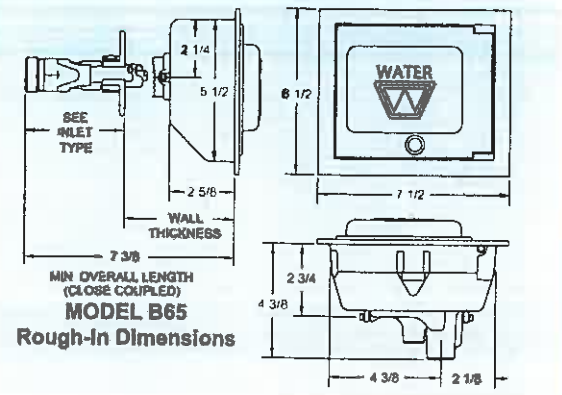

MODEL B65
Rough-In Dimensions

Operating Rod Assy. "A"

Wall Thickness 65	Wall Thickness B65/RB65	Length	Part No.
CC	CC	3 ½"	55401
N/A	4	4 ½"	55402
4	6	6 ½"	55404
6	8	8 ½"	55406
8	10	10 ½"	55408
10	12	12 ½"	55410
12	14	14 ½"	55412
14	16	16 ½"	55414
16	18	18 ½"	55416
18	20	20 ½"	55418
20	22	22 ½"	55420
22	24	24 ½"	55422
24	N/A	26 ½"	55424

Manufactured under one or more of the following patents:
U.S. Patents:
3,414,001
4,178,956
4,316,481
4,532,954
D216,790
D216,791
D277,365
D277,366
Canada Patents:
852,529
865,995
1,146,438

Wall Thickness (Inch)	CC	4	6	8	10	12	14	16	18	20	22	24
Overall Length - Hydrant	5	8	10	12	14	16	18	20	22	24	26	28
Overall Lenth - Box Models	7 3/8	8 3/8	10 3/8	12 3/8	14 3/8	16 3/8	18 3/8	20 3/8	22 3/8	24 3/8	26 3/8	28 3/8
Shipping Wt. (Lbs)**	3.8	4.4	4.8	5.2	5.6	6	6.4	6.8	7.2	7.6	8	8.4

** Add 8.3 Lbs. for brass box models.
** Add 2.5 Lbs. for aluminum box models.

NOTE: Close Coupled Models are not recommended for use in freezing climates and cannot use wall clamp.

For more information contact...

WOODFORD MANUFACTURING COMPANY

2121 Waynoka Road, Colorado Springs, Colorado 80915 • **Phone:** (800) 621-6032 • **Fax:** (800) 765-4115
To view our complete product line visit: ***www.woodfordmfg.com*** *or email:* ***sales@woodfordmfg.com***
A Division Of WCM Industries, Inc.

6 Year ELECTRIC

- 6 year limited warranty on tank and parts
- Dual 4500 watt heating elements for faster recovery
- Patented resistor design heating elements prolong anode rod and tank life
- Tank protected by exclusive porcelain formula
- Easy access thermostat adjustment
- Rigid foam insulation for superior heat retention
- Factory installed temperature and pressure relief valve
- Includes extra durable high temperature dip tube to meet the most stringent plumbing codes
- Meets or exceeds National Appliance Energy Conservation Act (NAECA) requirements

Energy Factor and Average Annual Operating Costs based on D.O.E. (Department of Energy) test procedures. The D.O.E. national average fuel rate for electricity is 10.65¢/KWH.

DESCRIPTION			FEATURES			DIMENSIONS				ENERGY INFORMATION		
Tank Gallon Capacity	Height Description	Model Number	Heating Element Watt. Upper	Lower	First Hour Del. G.P.H.	Tank Diam.	Tank Height	Height to Water Conn.	Ship Wt. (Pounds)	Energy Factor	Est. Annual Oper. Costs	Price
30	Short	6ES30-2	4500	4500	42	22-1/4	30	30	83	0.93	$503	
30	Medium	6EM30-2	4500	4500	44	19-3/4	36	36	80	0.93	$503	
30	Tall	6E30-2	4500	4500	48	17-3/4	45-3/4	45-3/4	80	0.93	$503	
38	Short	6ES40-2	4500	4500	45	23	31-1/2	31-1/2	108	0.92	$508	
40	Medium	6EM40-2	4500	4500	53	19-3/4	46-1/2	46-1/2	95	0.92	$508	
40	Tall	6E40-2	4500	4500	57	17-3/4	59-1/4	59-1/4	96	0.92	$508	
47	Short	6ES50-2	4500	4500	55	26-1/4	32	32	149	0.91	$514	
50	Medium	6EM50-2	4500	4500	62	21-3/4	46	46	117	0.90	$520	
50	Tall	6E50-2	4500	4500	67	19	57	57	107	0.90	$520	
65	Tall	6E65-2	4500	4500	71	21	58-1/2	58-1/2	150	0.89	$525	
80	Tall	6E80-2	4500	4500	88	23	59	59	177	0.86	$544	
119	Tall	6E120-2	4500	4500	99	28-1/4	62-1/2	62-1/2	324	0.85	$550	

•Water heaters furnished with standard 240 volt AC, single phase, non-simultaneous wiring.
Feature, dimensional and energy information is subject to change.

SURFACE MOUNT SWITCH SET

28/29 & 29P SERIES

UL LISTED ULC LISTED

✦ This Versatile Series Sets The Industry Standard For Commercial and Light Industrial Applications
✦ Surface Mount Magnetic Contacts ✦ Screw Down Flanges
✦ 24" #22AWG 2 Conductor Jacketed Lead on 29PA Series
✦ Concealed Screw Terminals on 28 Series
✦ Side Screw Terminals on 29 Series ✦ Longer Leads on 29PA Upon Request
✦ Hermetically Sealed ✦ Plated Contacts Resist Sticking or Freezing
✦ Covers, Spacers and Mounting Hardware Included
✦ Built-in E.O.L. Resistors and Diodes Upon Request
✦ Supervisory Loops and Dummy Terminals Upon Request
✦ Switches and Magnets Available Separately
✦ Colors: White, Brown, Gray ✦ Private Labeling Upon Request
✦ Lifetime Warranty

28A

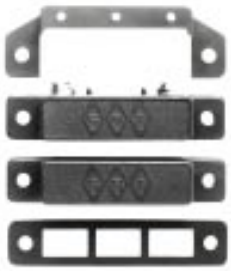

29A

29PA

PART NUMBERS:

	Closed Loop	Open Loop	SPDT	DPDT
Standard Gap	28A	28B	28C	
Up To 1",	29A	29B	29C	
5/8" On Steel	29PA	29PB	29PC	29PD
Wide Gap	28AWG	28BWG	28CWG	
Up To 1 1/2",	29AWG	29BWG	29CWG	
3/4" On Steel	29PAWG	29PBWG	29PCWG	29PDWG
Extra Wide Gap	28AXWG	28BXWG	28CXWG	
Up To 2",	29AXWG	29BXWG	29CXWG	
1" On Steel	29PAXWG	29PBXWG	29PCXWG	

WARRANTY:
Lifetime warranty against workmanship, material and factory defects.

GEORGE RISK INDUSTRIES, INC.
G.R.I. PLAZA
KIMBALL, NE 69145

MADE IN U.S.A.

TOLL-FREE 1-800-445-5218
TOLL-FREE 1-800-523-1227
(308) 235-4645
FAX (308) 235-3561
E-MAIL: grisales@megavision.com
WEB SITE: www.grisk.com

SURFACE MOUNT SWITCH SET

INSTALLATION APPLICATIONS:

This series offers a standard gap of 1 inch, a wide gap of up to 1 1/2" and an extra wide gap of 2 inches and can be installed on a steel surface with a minimum gap penalty. The "P" style is a pre-wired switch with 2 feet of conductor cable. A broad range of mounting brackets are also available. (See spec sheet in accessory section of the G.R.I. full line catalog.)

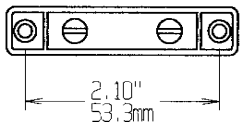

28A

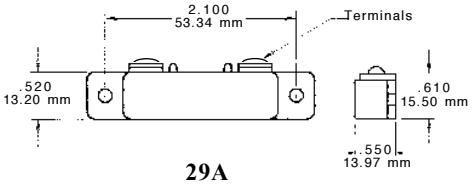

29A

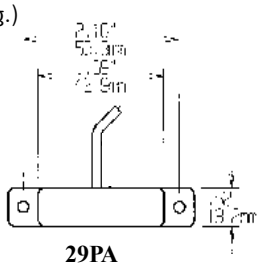

29PA

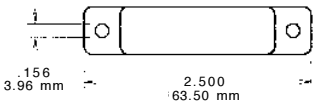

Magnet

GRI products meet or exceed these minimum general specifications:

PART NUMBER	LOOP TYPE	ELECTRICAL CONFIG.	REED FORM	MAXIMUM INITIAL CONTACT RESISTANCE (Ω)	MAXIMUM CONTACT RATING (W)	MAXIMUM SWITCHING VOLTAGE (VDC/VAC)	MAXIMUM SWITCHING CURRENT (A)
28A	Closed	N/O	A	.150	10	160/110	.400
28AWG	Closed	N/O	A	.150	10	160/110	.400
28AXWG	Closed	N/O	A	.150	10	160/110	.400
29A	Closed	N/O	A	.150	10	160/110	.400
29AWG	Closed	N/O	A	.150	10	160/110	.400
29AXWG	Closed	N/O	A	.150	10	160/110	.400
29PA	Closed	N/O	A	.150	10	160/110	.400
29PAWG	Closed	N/O	A	.150	10	160/110	.400
29PAXWG	Closed	N/O	A	.150	10	160/110	.400
28B	Open	N/C	B	.140	5	175VDC	.250
28BWG	Open	N/C	B	.140	5	175VDC	.250
28BXWG	Open	N/C	B	.140	5	175VDC	.250
29B	Open	N/C	B	.140	5	175VDC	.250
29BWG	Open	N/C	B	.140	5	175VDC	.250
29BXWG	Open	N/C	B	.140	5	175VDC	.250
29PB	Open	N/C	B	.140	5	175VDC	.250
29PBWG	Open	N/C	B	.140	5	175VDC	.250
29PBXWG	Open	N/C	B	.140	5	175VDC	.250
28C	Open/Closed	SPDT	C	.140	5	175VDC	.250
28CWG	Open/Closed	SPDT	C	.140	5	175VDC	.250
28CXWG	Open/Closed	SPDT	C	.140	5	175VDC	.250
29C	Open/Closed	SPDT	C	.140	5	175VDC	.250
29CWG	Open/Closed	SPDT	C	.140	5	175VDC	.250
29CXWG	Open/Closed	SPDT	C	.140	5	175VDC	.250
29PC	Open/Closed	SPDT	C	.140	5	175VDC	.250
29PCWG	Open/Closed	SPDT	C	.140	5	175VDC	.250
29PCXWG	Open/Closed	SPDT	C	.140	5	175VDC	.250
29PD		DPDT	CX2	.140	5	175VDC	.250
29PDWG		DPDT	CX2	.140	5	175VDC	.250

CONTACT YOUR G.R.I. DISTRIBUTOR OR CALL:

GEORGE RISK INDUSTRIES, INC.
G.R.I. PLAZA
KIMBALL, NE 69145

TOLL-FREE 1-800-445-5218
TOLL-FREE 1-800-523-1227
(308) 235-4645
FAX (308) 235-3561
E-MAIL: grisales@megavision.com
WEB SITE: www.grisk.com

MADE IN U.S.A.

BA-83 Rev. G 10/13/06

INDUSTRIAL OVERHEAD DOOR SWITCH SET

200/250 SERIES

UL LISTED ULC LISTED

- ◆ Extruded Aluminum Floor or Wall Mount Switch
- ◆ Screw Mount ◆ #22AWG In 36” Stainless Steel Armored Cable
- ◆ Longer Leads Upon Request ◆ Hermetically Sealed
- ◆ Plated Contacts Resist Sticking or Freezing
- ◆ Magnet, Bracket and Mounting Hardware Included
- ◆ Built-in E.O.L. Resistors Upon Request
- ◆ Supervisory Loops Available Upon Request
- ◆ Switches and Magnets Available Separately
- ◆ Lifetime Warranty

200-36

250-36

PART NUMBERS:

	Gap	Closed Loop	Open Loop	SPDT	DPDT
Floor Mount	2 1/2”	200-36	210-36	220-36	230-36
	3”	200-36HD			
Wall Mount	2 1/2”	250-36	260-36	270-36	280-36
	3”	250-36HD			

GEORGE RISK INDUSTRIES, INC.
G.R.I. PLAZA
KIMBALL, NE 69145

MADE IN U.S.A.

TOLL-FREE 1-800-445-5218
TOLL-FREE 1-800-523-1227
(308) 235-4645
FAX (308) 235-3561
E-MAIL: grisales@megavision.com
WEB SITE: www.grisk.com

INDUSTRIAL OVERHEAD DOOR SWITCH SET

INSTALLATION APPLICATIONS:

The G.R.I. 200 series is referenced and produced as an industrial grade floor mount switch. Primarily used for the protection of overhead doors where the operation of heavy motorized traffic would make it impossible to use any type of a plastic encapsulated switch. The 200 housing is extruded from a 6063 T5 aluminum material and tested to withstand a crushing force of 20,000 pounds or 10 tons without harming or causing failure of the delicate reed switch. All mounting hardware including lead anchors are provided as well as a mounting bracket for the actuating magnet. A 1/4" masonry bit is required for lead anchor installation.

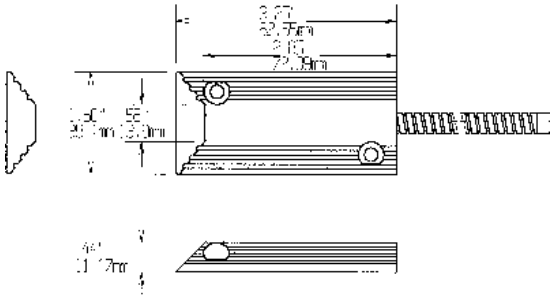

Floor Mount
200-36

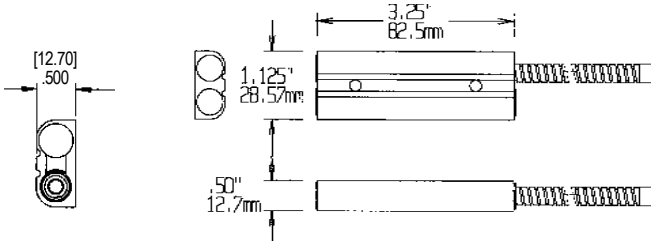

Wall Mount
250-36

Minimum General Specifications:

PART NUMBER	LOOP TYPE	ELECTRICAL CONFIG.	REED FORM	MAXIMUM INITIAL CONTACT RESISTANCE (Ω)	MAXIMUM CONTACT RATING (W)	MAXIMUM SWITCHING VOLTAGE (VDC/VAC)	MAXIMUM SWITCHING CURRENT (A)
200-36	Closed	N/O	A	.150	10	200/140	.500
200-36HD	Closed	N/O	A	.150	10	200/140	.500
250-36	Closed	N/O	A	.150	10	200/140	.500
250-36HD	Closed	N/O	A	.150	10	200/140	.500
210-36	Open	N/C	B	.140	5	175VDC	.250
260-36	Open	N/C	B	.140	5	175VDC	.250
220-36	Open/Closed	SPDT	C	.140	5	175VDC	.250
270-36	Open/Closed	SPDT	C	.140	5	175VDC	.250
230-36		DPDT	CX2	.140	5	175VDC	.250
280-36		DPDT	CX2	.140	5	175VDC	.250

WARRANTY:

Lifetime warranty against workmanship, material and factory defects.

CONTACT YOUR G.R.I. DISTRIBUTOR OR CALL:

GEORGE RISK INDUSTRIES, INC.
G.R.I. PLAZA
KIMBALL, NE 69145

TOLL-FREE 1-800-445-5218
TOLL-FREE 1-800-523-1227
(308) 235-4645
FAX (308) 235-3561
E-MAIL: grisales@megavision.com
WEB SITE: www.grisk.com

MADE IN U.S.A.

BA-62 Rev. H 2/20/06

INDUSTRIAL SURFACE MOUNT SWITCH SET

400/410 & 410P SERIES

- ◆ Surface Mount Screw Down Magnetic Contact
- ◆ 400 Has Concealed Terminals
- ◆ 410 Has Standard Terminals On Side of Contact
- ◆ 410P Has 36” 2 Conductor Vinyl Jacketed Cable
- ◆ Spacers & Mounting Hardware Included
- ◆ Built-in E.O.L. Resistors and Diodes Upon Request
- ◆ Colors: White, Brown, Gray ◆ Lifetime Warranty
- ◆ Private Labeling Upon Request ◆ UL 10C Indicates U.L. 10C Fire Rated

410P ULC LISTED

400 UL LISTED ULC LISTED UL 10C

410 UL LISTED ULC LISTED

8299-G Mounting Kit Includes S412P-G, M-402, Brackets and Hardware

PART NUMBERS:

	Closed Loop	Open Loop	SPDT	DPDT
Standard Gap Up To 1 1/2”	400	401	402	
	410	411	412	
	410P	411P	412P	413P
Wide Gap Up To 3 1/4”	400WG	401WG	402WG	
	410WG	411WG	412WG	
	410PWG	411PWG	412PWG	413PWG

GEORGE RISK INDUSTRIES, INC.
G.R.I. PLAZA
KIMBALL, NE 69145

MADE IN U.S.A.

TOLL-FREE 1-800-445-5218
TOLL-FREE 1-800-523-1227
(308) 235-4645
FAX (308) 235-3561
E-MAIL: grisales@megavision.com
WEB SITE: www.grisk.com

INDUSTRIAL SURFACE MOUNT SWITCH SET

INSTALLATION APPLICATIONS:

The G.R.I. series of commercial and industrial switch sets offers the installer two choices: The 400 series incorporates hidden terminals, inset into the recessed back to provide tamper resistant installations. The 410 series has the standard terminals located on the side of the switch. Both options give the installer a regular gap of 1 1/2" while the wide gap version is 3", which cover the various types of steel door and frame conditions found at every commercial and industrial site. Spacers and mounting hardware are included with the set. The 410P version offers two feet of vinyl jacketed 2 conductor cable. A mounting bracket kit, PN #8299-G is also available. The kit includes a S412P-G w/M-402-G, S-200 & 4175 brackets and mounting hardware.

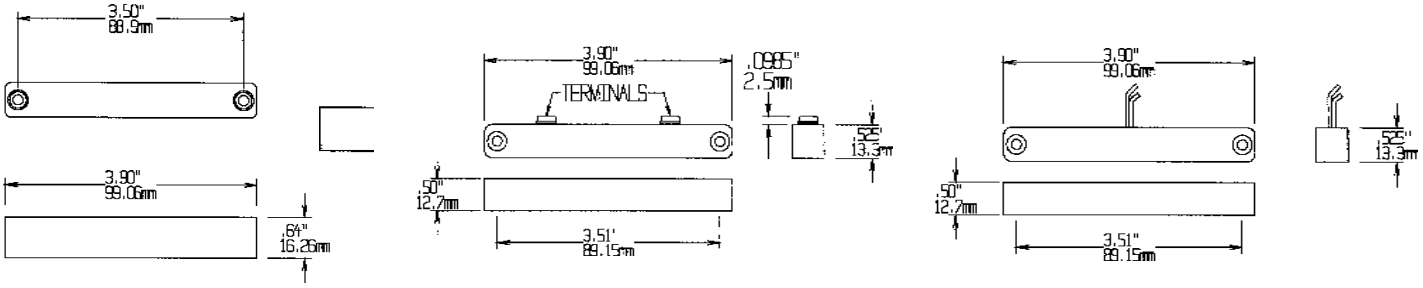

400 **410** **410P**

GRI products meet or exceed these minimum general specifications:

PART NUMBER	LOOP TYPE	ELECTRICAL CONFIG.	REED FORM	MAXIMUM INITIAL CONTACT RESISTANCE (Ω)	MAXIMUM CONTACT RATING (W)	MAXIMUM SWITCHING VOLTAGE (VDC/VAC)	MAXIMUM SWITCHING CURRENT (A)
400	Closed	N/O	A	.150	10	160/110	.400
400WG	Closed	N/O	A	.150	10	160/110	.400
410	Closed	N/O	A	.150	10	160/110	.400
410WG	Closed	N/O	A	.150	10	160/110	.400
410P	Closed	N/O	A	.150	10	160/110	.400
410PWG	Closed	N/O	A	.150	10	160/110	.400
401	Open	N/C	B	.140	5	175VDC	.250
401WG	Open	N/C	B	.140	5	175VDC	.250
411	Open	N/C	B	.140	5	175VDC	.250
411WG	Open	N/C	B	.140	5	175VDC	.250
411P	Open	N/C	B	.140	5	175VDC	.250
411PWG	Open	N/C	B	.140	5	175VDC	.250
402	Open/Closed	SPDT	C	.140	5	175VDC	.250
402WG	Open/Closed	SPDT	C	.140	5	175VDC	.250
412	Open/Closed	SPDT	C	.140	5	175VDC	.250
412WG	Open/Closed	SPDT	C	.140	5	175VDC	.250
412P	Open/Closed	SPDT	C	.140	5	175VDC	.250
412PWG	Open/Closed	SPDT	C	.140	5	175VDC	.250
413P		DPDT	CX2	.140	5	175VDC	.250
413PWG		DPDT	CX2	.140	5	175VDC	.250

WARRANTY:

Lifetime warranty against workmanship, material and factory defects.

CONTACT YOUR G.R.I. DISTRIBUTOR OR CALL:

GEORGE RISK INDUSTRIES, INC.
G.R.I. PLAZA
KIMBALL, NE 69145

TOLL-FREE 1-800-445-5218
TOLL-FREE 1-800-523-1227
(308) 235-4645
FAX (308) 235-3561
E-MAIL: grisales@megavision.com
WEB SITE: www.grisk.com

MADE IN U.S.A.

BA-88 Rev. I 10/13/06

SPECIAL PURPOSE PULL APART SWITCH SET

4704/4714 SERIES

- ◆ Pull Apart Surface Mount Reed Switch
- ◆ Great For Marinas - Truck Docks - Any Portable Merchandise
- ◆ Heavy Duty 4714 Series For Improved Durability
- ◆ 3 Foot Jacketed or Armored Cable Standard
- ◆ Custom Lead Lengths Available Upon Request ◆ Mounting Hardware Included
- ◆ Built-in E.O.L. Resistors and Diodes Upon Request
- ◆ Supervisory Loops Upon Request
- ◆ Armored Disconnect Cable Available See Specialty Section
- ◆ Available in Gray ◆ Lifetime Warranty

4714-JC

4704-A

4714-A

APPLICATIONS:

The G.R.I. 4704/4714 Series has been designed for the problem security application where the free movement of the object in question would make it impossible to utilize a standard magnetic proximity device. The 4704-A consists of three major parts — an actuating magnet housing, the switch probe and the probe receptacle. The 4704-A can be used in place of standard surface mount switches to protect badly worn or ill fitting roll up doors, swinging gates or expanding metal curtains. Also excellent for vehicle protection to prevent unauthorized movement, operation or theft of any mobile object that can be towed, driven or otherwise moved such as tractor truck trailers, motor boats or recreation vehicles.

The new G.R.I. 4714 Series Heavy Duty Pull Apart switch set has the same features and options as our 4704 Series. The switch has been moved into the mounted side of the unit which will stop breakage and improve durability. The actuation magnet is now in the probe along with a supervisory loop. The supervisory loop which consists of 2 conductor wire, is placed through 1/4" armored cable or woven through the links of a 3/16" chain. Both options are available in custom lead and supervisory loop lengths.

The G.R.I. 4704 and 4714 Series Pull Apart Switch Sets are designed to protect any equipment, merchandise or object that is stored where it is impossible to secure utilizing conventional devices, such as outside. Examples would be golf carts, tires, lawn equipment, motorcycles and ATV's, rental equipment.

GEORGE RISK INDUSTRIES, INC.
GR.I. PLAZA
KIMBALL, NE 69145

MADE IN U.S.A.

TOLL-FREE 1-800-445-5218
TOLL-FREE 1-800-523-1227
(308) 235-4645
FAX (308) 235-3561
E-MAIL: grisales@megavision.com
WEB SITE: www.grisk.com

SPECIAL PURPOSE PULL APART SWITCH SET

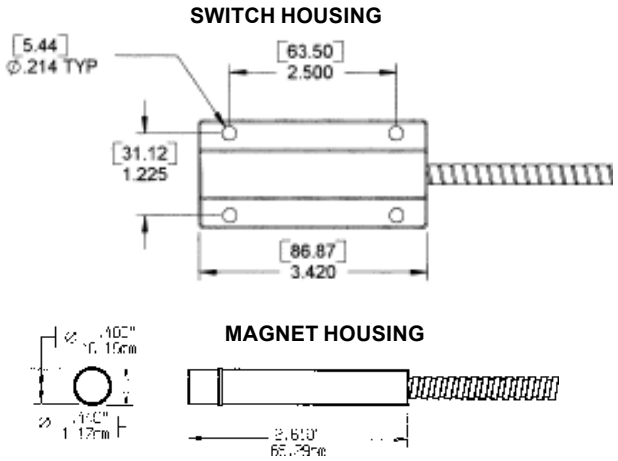

4714-A

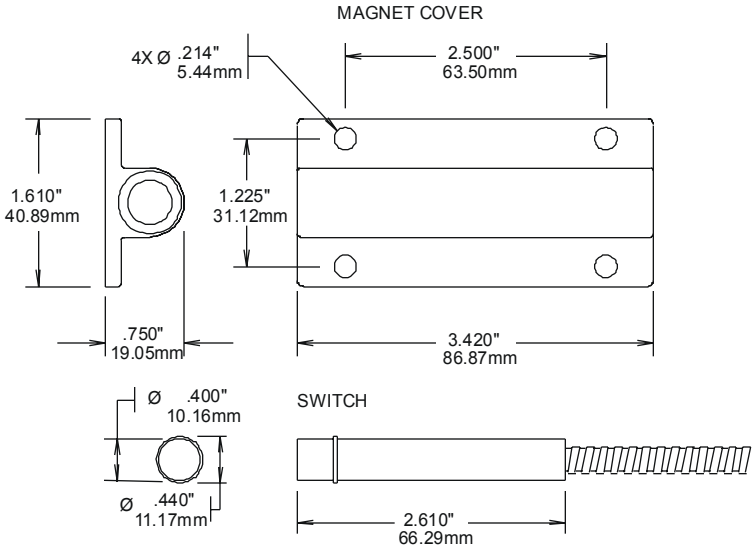

4704-A

PART NUMBERS	SPDT
Jacketed Cable	4704
	4714
Jacketed Cable w/Chain	4714-JC
Armored Cable	4704-A
	4714-A

Minimum General Specifications:

PART NUMBER	LOOP TYPE	ELECTRICAL CONFIG.	REED FORM	MAXIMUM INITIAL CONTACT RESISTANCE (Ω)	MAXIMUM CONTACT RATING (W)	MAXIMUM SWITCHING VOLTAGE (VDC/VAC)	MAXIMUM SWITCHING CURRENT (A)
4704	Open/Closed	SPDT	C	.140	5	175VDC	.250
4704-A	Open/Closed	SPDT	C	.140	5	175VDC	.250
4714	Open/Closed	SPDT	C	.140	5	175VDC	.250
4714-A	Open/Closed	SPDT	C	.140	5	175VDC	.250
4714-JC	Open/Closed	SPDT	C	.140	5	175VDC	.250

WARRANTY:

Lifetime warranty against workmanship, material and factory defects.

CONTACT YOUR G.R.I. DISTRIBUTOR OR CALL:

GEORGE RISK INDUSTRIES, INC.
G.R.I. PLAZA
KIMBALL, NE 69145

TOLL-FREE 1-800-445-5218
TOLL-FREE 1-800-523-1227
(308) 235-4645
FAX (308) 235-3561
E-MAIL: grisales@megavision.com
WEB SITE: www.grisk.com

MADE IN U.S.A.

BA-58 Rev. H 2/20/06

RECESSED 3/4" & 1" STEEL DOOR SWITCH SET

180/184/8080-T SERIES

UL LISTED ULC LISTED

- ◆ Recessed Magnetic Contact
- ◆ 12" #22AWG Leads or Screw Terminals
- ◆ Longer Leads, Zip Cord or Jacketed Cable Upon Request
- ◆ Built-in E.O.L. Resistors and Diodes Upon Request
- ◆ Supervisory Loops Upon Request
- ◆ Switches and Magnets Available Separately
- ◆ Colors: White, Brown, Gray, Black
- ◆ UL 10C Indicates U.L. 10C Fire Rated

180-12 UL 10C

8080-T

PART NUMBERS:

		Closed Loop	Open Loop	SPDT	DPDT
Standard Gap Up To 1/2" On Steel*	3/4" Dia.	180-12 (UL 10C)	185-12	190-12	195-12
	1" Dia.	184-12 (UL 10C)	189-12	194-12	199-12
	3/4" Dia.	8080-T	8585-T		
	1" Dia.	8484-T	8989-T		
Wide Gap 3/4"+ On Steel*	3/4" Dia.	180-12WG (UL 10C)	185-12WG	190-12WG	195-12WG
	1" Dia.	184-12WG (UL 10C)	189-12WG	194-12WG	199-12WG
	3/4" Dia.	8080-TWG	8585-TWG		
	1" Dia.	8484-TWG	8989-TWG		

*Gaps will increase substantially for installations other than steel
*Gaps up to one inch on steel when paired with MC-180 Door Channel Magnet

7/8" Diameter Also Available. P/N 81-12 and 81-12WG. White or Black only. Please call factory.

WARRANTY:
Lifetime warranty against workmanship, material and factory defects.

GEORGE RISK INDUSTRIES, INC.
G.R.I. PLAZA
KIMBALL, NE 69145

MADE IN U.S.A.

TOLL-FREE 1-800-445-5218
TOLL-FREE 1-800-523-1227
(308) 235-4645
FAX (308) 235-3561
E-MAIL: grisales@megavision.com
WEB SITE: www.grisk.com

RECESSED 3/4" & 1" STEEL DOOR SWITCH SET

INSTALLATION APPLICATIONS: The G.R.I. 180-12 is the industry standard 3/4" diameter recessed steel door switch set with 12" leads. The innovative G.R.I. 8080-T series is a 3/4" diameter recessed switch set designed for residential, commercial and industrial steel doors and frames. The shorter length terminals makes the installation of the set quick and simple.

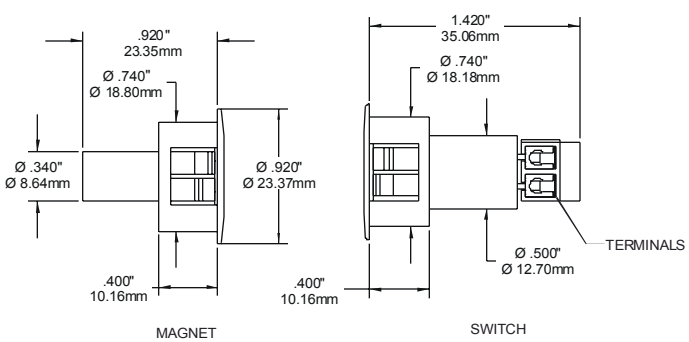

8080-T

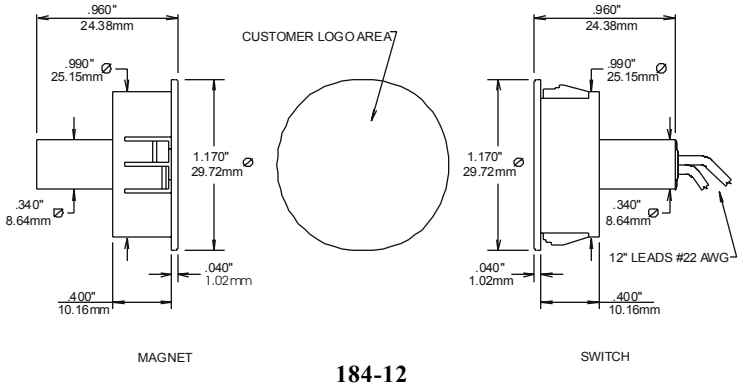

184-12

GRI products meet or exceed these minimum general specifications:

PART NUMBER	LOOP TYPE	ELECTRICAL CONFIG.	REED FORM	MAXIMUM INITIAL CONTACT RESISTANCE (Ω)	MAXIMUM CONTACT RATING (W)	MAXIMUM SWITCHING VOLTAGE (VDC/VAC)	MAXIMUM SWITCHING CURRENT (A)
180-12	Closed	N/O	A	.150	10	200/140	.400
180-12WG	Closed	N/O	A	.150	10	200/140	.400
184-12	Closed	N/O	A	.150	10	200/140	.400
184-12WG	Closed	N/O	A	.150	10	200/140	.400
8080-T	Closed	N/O	A	.150	10	160/110	.400
8080-TWG	Closed	N/O	A	.150	10	160/110	.400
8484-T	Closed	N/O	A	.150	10	160/110	.400
8484-TWG	Closed	N/O	A	.150	10	160/110	.400
185-12	Open	N/C	B	.140	5	175VDC	.250
185-12WG	Open	N/C	B	.140	5	175VDC	.250
189-12	Open	N/C	B	.140	5	175VDC	.250
189-12WG	Open	N/C	B	.140	5	175VDC	.250
8585-T	Open	N/C	B	.140	5	175VDC	.250
8585-TWG	Open	N/C	B	.140	5	175VDC	.250
8989-T	Open	N/C	B	.140	5	175VDC	.250
8989-TWG	Open	N/C	B	.140	5	175VDC	.250
190-12	Open/Closed	SPDT	C	.140	5	175VDC	.250
190-12WG	Open/Closed	SPDT	C	.140	5	175VDC	.250
194-12	Open/Closed	SPDT	C	.140	5	175VDC	.250
194-12WG	Open/Closed	SPDT	C	.140	5	175VDC	.250
195-12		DPDT	C X 2	.140	5	175VDC	.250
199-12		DPDT	C X 2	.140	5	175VDC	.250

CONTACT YOUR G.R.I. DISTRIBUTOR OR CALL:

GEORGE RISK INDUSTRIES, INC.
G.R.I. PLAZA
KIMBALL, NE 69145

TOLL-FREE 1-800-445-5218
TOLL-FREE 1-800-523-1227
(308) 235-4645
FAX (308) 235-3561
E-MAIL: grisales@megavision.com
WEB SITE: www.grisk.com

MADE IN U.S.A.

BA-90 Rev. N 5/25/07

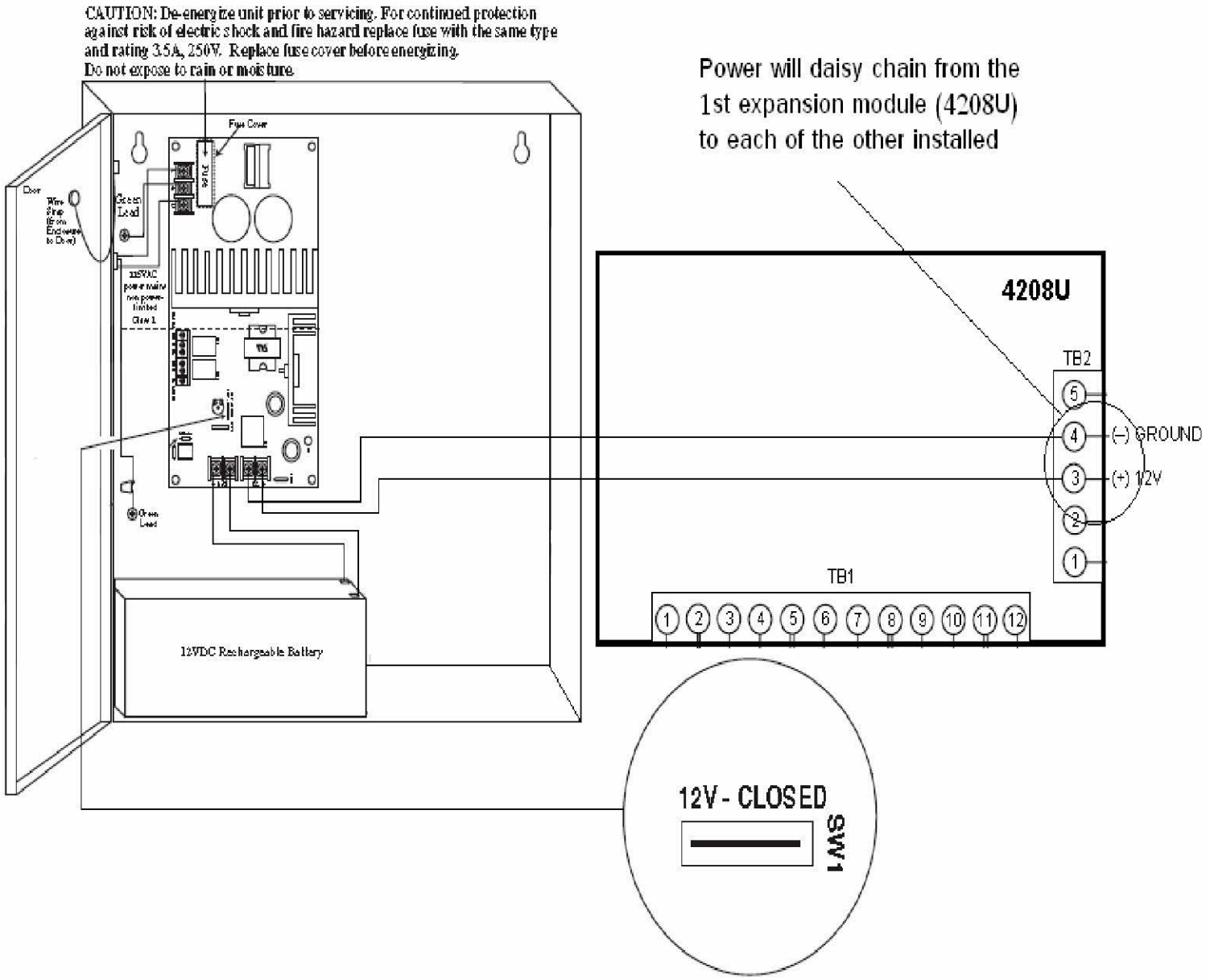
CAUTION: De-energize unit prior to servicing. For continued protection against risk of electric shock and fire hazard replace fuse with the same type and rating 3.5A, 250V. Replace fuse cover before energizing.
Do not expose to rain or moisture.
Power will daisy chain from the 1st expansion module (4208U) to each of the other installed
Fuse Cover
Door
Green Lead
115VAC power mains non power-limited Class 1
12VDC Rechargeable Battery
4208U
TB2
(-) GROUND
(+) 12V
TB1
12V - CLOSED
SW1

SPECIFICATIONS

Model	AX-70TN	AX-130TN	AX-200TN	AX-100TF	AX-200TF
Detection method	Infrared beam interruption detection				
Maximum detection range	20m (70ft.)	40m (130ft.)	60m (200ft.)	30m (100ft.)	60m (200ft.)
Maximum arrival range	200m (700ft.)	400m (1300ft.)	600m (2000ft.)	300m (1000ft.)	600m (2000ft.)
Interruption period	Selectable between 50, 100, 250, and 500m sec.				
Selectable beam frequency				4 channel	
Power supply	10.5 - 28V DC				
Current consumption (transmitter + receiver)	38mA (max.)	41mA (max.)	45mA (max.)	44mA (max.)	48mA (max.)
Alarm period	2sec. (±1) nominal				
Alarm output	N.C. 28V DC, 0.2A (max.)			N.C./N.O. 28V DC, 0.2A (max.)	
D.Q. output				N.C. 28V DC, 0.2A (max.)	
Tamper switch	Opens when cover is removed at 28V DC, 0.2A max.				
Operating temperature	-35°C to +60°C (-31°F to +140°F) Use the optional heating unit (HU-3) in conditions of -25°C (-13°F) or below.				
Operating humidity	95% max.				
Alignment angle	± 90° Horizontal, ± 5° Vertical				
Mounting	Wall and pole mounting				
Weight (transmitter + receiver)	650g (22.9oz.)			700g (24.7oz.)	
Housing protection (EN 00529)	IP65				

*Specifications and design are subject to change without prior notice.
NOTE: These units are designed to detect an intruder and activate an alarm control panel. Being only a part of a complete system, we cannot accept responsibility for any damages or other consequences resulting from an intrusion. These products conform to the EMC Directive 89/336 ECC.

DIMENSIONS

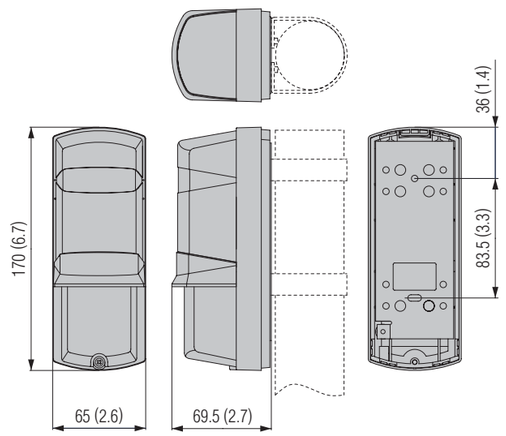

Dimensions : mm (inches)

OPTIONS

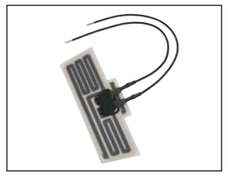

HU-3 : Heating Unit
Heating unit for severe low temperature conditions
24V DC/AC, 420mA max.
1 set (2 units)

BC-3 : Back Cover
Can be used to cover mounting pole.
1 set (2 units)

PSC-3 : Pole Side Cover
Cover for installing 2 units to 1 pole.
1 set (2 units)

OPTEX CO., LTD.
(ISO 9001 Certified by LRQA / ISO14001 Certified by JET)
5-8-12 Ogoto, Otsu, Shiga, 520-0101 Japan
TEL +81(0)77 579 8670 FAX +81(0)77 579 8190 http://www.optex.co.jp/e

OPTEX INCORPORATED (USA) http://www.optexamerica.com
OPTEX (EUROPE) LTD. (UK) http://www.optexeurope.com
OPTEX SECURITY SAS (FRANCE) http://www.optex-security.com
OPTEX KOREA CO., LTD. (KOREA) http://www.optexkorea.com
OPTEX SECURITY Sp. z o.o. (POLAND)

"Take Care of the Environment" This catalogue uses recycled paper No. 75107-00-909-0612

SHORT RANGE PHOTOELECTRIC DETECTOR

AX-70/130/200TN
(STANDARD MODEL)

AX-100/200TF
(ENHANCED MODEL)

The Best Short Range Photoelectric Detector

AX-TN/TF series is a compact photoelectric detector with "the IP65 high durability", and "stable detection performance".
These features reduce false alarms drastically caused by outdoor severe environmental changes and provide a wide range of applications.

The best short range photoelectric detector from OPTEX

OPTEX succeeded to strengthen the basic performance and ability of photoelectric detector to reduce false alarms under severe outdoor environments.

The rubber packing for wiring hole prevents rain, dust, and tiny insects from getting into the unit and the widely designed optical pitch maximizes the detection principle of twin beam.

AX-70/130/200TN (STANDARD MODEL)
AX-100/200TF (ENHANCED MODEL)

☐ IP65 structure with high sealing rubber packing

Rubber packing is used for all conceivable points where water or dust may penetrate, such as wiring holes, wire ports and the outer chassis. Prevention from dust, bugs and water delivers performance with higher reliability against false alarms and breakdowns.

IP65

- **Waterproof.** Protected against water jets from any direction
- **Dust-tight.** No ingress of dust.
- **International Protection Code.** It shows the degress of protection provided by enclosures.

5 degrees of water conditions were used to evaluate the protection against water

Tests were conducted using a water jet stream that applied 12.5 liters/min of water at a distance of approximately 3 meters for roughly 3 minutes. This test was directly applied to the chassis of the AX-TN and TF series.

The tests resulted with the AX-TN/TF unit undamaged due to the highly durable IP65 rated structure. It aids in the prevention of water damage to the unit while keeping the detector operating accurately in outdoor environments.

☐ Anti-frost hood cover

A hood is installed to prevent frost forming on lower beams. It also makes the maintenance easy because the surface of the cover is flat.

☐ Lightning protection

An improved Electro-Magnetic Interference surge absorber and high surge resistive relay has been installed to protect from lightning surges and maintain stable operation.

Lightning Protection Level

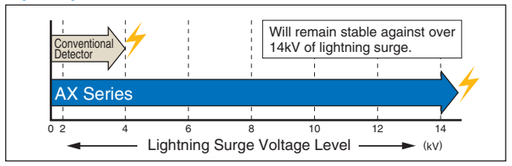

☐ Easy angle adjustment

It allows the installer to finely adjust the beam easily.
[Horizontally ±90° with hand]
[Vertically ±5° with screwdriver]

☐ High grade spherical lens

The high grade spherical lens creates more sharply defined & precise infrared beams compared to ordinary fresnel lenses.

☐ A.G.C. (Automatic Gain Control) Circuit

A.G.C. circuit continually monitors for gradual changes in the signal's strength caused by changing weather conditions. It adjusts the sensitivity accordingly to maintain the proper signal level for the current environmental conditions.

☐ 99% beam blocking stability

Enables stable operation with as much as 99% loss of beam energy caused by heavy rain, dust storms, fog or snow.

☐ Adjustable beam interruption period

The beam interruption time can be adjusted to fit any application. For example, when protecting a wall or fence, a longer interruption time will catch intruders.

AX-100/200TF only

☐ Selectable beam frequencies

The selectable beam frequencies can be used to avoid unwanted crosstalk that can occur when using multiple photobeams for long distance or beam stacking applications.

1. Long distance stacking

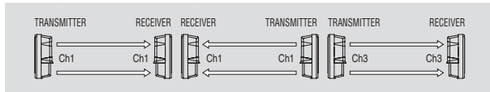

2. Two beam long distance

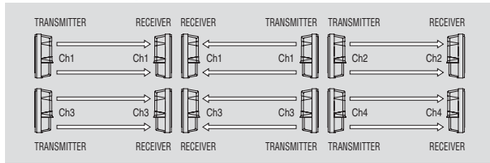

☐ D.Q. Circuit

D.Q. circuit (environmental disqualification) sends a trouble signal when the beam strength is below and acceptable level due to heavy fog, rain, snow or other changes in the installation site. The trouble signal output continues as long as the beam strength is below an acceptable level.

☐ 4 step alarm indicator LED for fast & accurate optical alignment

The alignment condition is visually displayed on the LED. It shows the alignment condition by using 4 different process to achieve accurate and easy alignment before fine tuning.

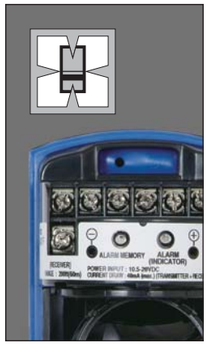

LED is "ON"
Before alignment.

↓

LED is "Fast Flickering"
Under the beam alignment. LED indication changes by beam receiving level.

↓

LED is "Slow Flickering"
Beam energy fromtransmitter is reaching receiver.

↓

LED is "OFF"
Ready for fine tuning

↓

Fine Adjustment with voltmeter

OPTEX

NEW & IMPROVED

PHOTOELECTRIC DETECTOR

AX-250/500PLUS

UL LISTED

5 YEAR WARRANTY

Innovative Design Meets Unsurpassed Quality in the New AX-250/500PLUS

The Photoelectric Beams of OPTEX's AX-250/500PLUS Series combine precise detection capability with increased reliability providing superior outdoor detection.

A dual beam design incorporates synchronized pulsed signals, and an adjustable beam interruption time can virtually eliminate unwanted activation. A high level of detection accuracy will be maintained, no matter how harsh the environment.
The AX-250/500PLUS will automatically compensate for changes in the surrounding conditions. The advanced mechanical design allows for easy installation and set-up providing long-term reliability, ideal for today's outdoor security systems.

NEW & IMPROVED
PHOTOELECTRIC DETECTOR

AX-250/500PLUS

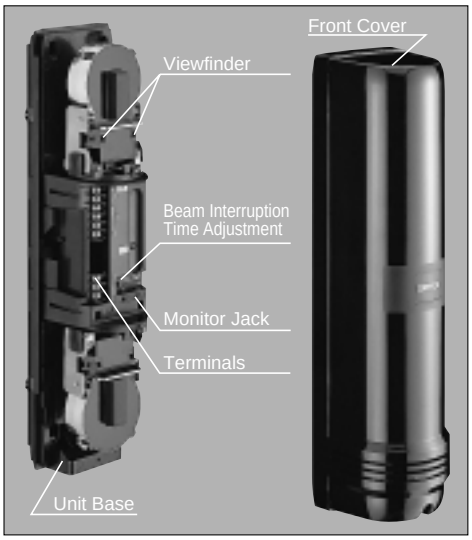

FEATURES

■ Lightning & Surge Protection

An improved EMI surge absorber and high surge resistiveness relay will maintain stable operation even in the most lightning prone areas.

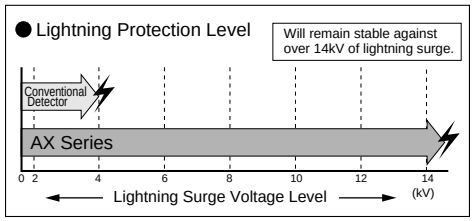

■ A.G.C. (Automatic Gain Control) Circuit

The A.G.C. Circuit continually monitors for gradual changes in the signal's strength caused by changing weather conditions. It adjusts the sensitivity accordingly to maintain the proper signal level for the current environmental conditions.

■ Adjustable Beam Interruption Period

Beam interruption time can be adjusted according to the peculiarities of each installation site. When protecting a wall or fence, a long interruption time will catch intruders, but let jumping cats pass through. Adjustable from 50 to 500msec.

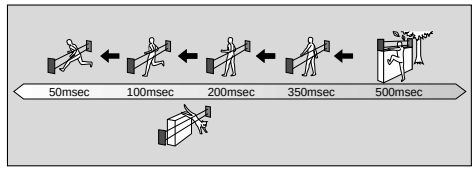

■ Twin Synchronized Pulsed Beams Designed for Greater Stability

"And Gate" dual beams require simultaneous interruption of both beams to trigger an activation. No activation is generated when a bird or falling leaves break just one beam.

■ 99% Beam Blocking Rate

Stable operation is maintained with as much as 99% of the beam's energy blocked by heavy rain, dust storms, snow or fog.

■ Anti-Frost Design

■ Stainless Steel Screws & Back Plate

■ Knock-Outs for 1/2 Inch Conduit

■ Form C Relay Providing More Flexibility

■ Reliability Chart for Outdoor Protection

Specially designed to eliminate various causes of outdoor false alarms.

False Alarm Causes	Technology to Solve	AX Function & Features
Lightning & High EMI Disturbances	High EMI Resistance	High Surge Resistiveness Relay & EMI Surge Absorber
Insect Entering into Housing	Sealed Enclosure Housing	IP54
Dew Condensation Fog, Frost & Heavy Rain	High Sensitivity Tolerance Excellent Optical Alignment Environmental Analysis	Ultra High Power Transmitter Anti-Frost Mechanism Easy Optical Alignment Mechanism Automatic Gain Control
Birds or Flying Objects	Size Analysis	Twin Synchronized Pulsed Beams

SPECIFICATIONS

MODEL	AX-250PLUS	AX-500PLUS
Detection Method	Infrared Photoelectric	
Range (Outdoor)	250ft. (75m)	500ft. (150m)
Maximum Arrival Distance	2500ft. (750m)	5000ft. (1500m)
Beam Characteristics	Pulsed Infrared	
Interruption Period	50～500msec (Selectable)	
Power Input	10.5～30V DC	
Current Draw (transmitter+receiver)	Normal operation 50 mA max	
Alarm Period	2sec (±1) nominal	
Alarm Output	Form C Relay (28V DC 0.2A max)	
Tamper Switch	N.C. opens when cover is removed (Receiver Only)	
Operating Temperature	-13°F ～+131°F(-25°C～+55°C)	
Environment Humidity	95% Max	
Alignment Angle	±10° Vertical, ±90° Horizontal	
Mounting	Wall or Pole	
Weight	95.2 oz(2700g) (Both Transmitter and Receiver)	

∗Specifications and design are subject to change without prior notice.
NOTE: This unit is designed to detect an intruder and activate an alarm control panel. Being only a part of a complete system, we cannot assume responsibility for theft or damages, should it occur.

DIMENSIONS

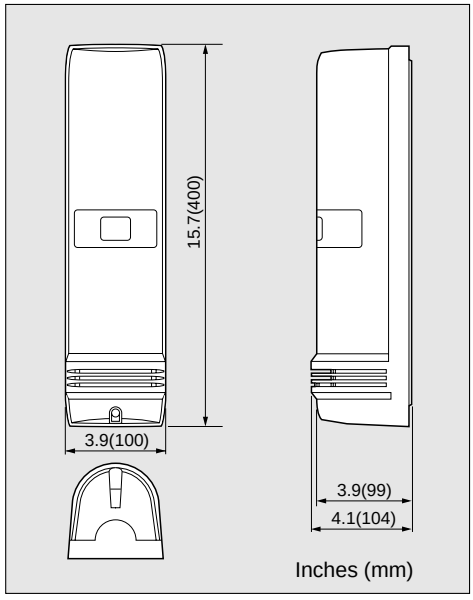

OPTIONS

■ HU-1 : Heating Unit

For use in cold areas. 24V DC/AC, 430mA max.

■ BC-1 : Back Cover

OPTEX CO., LTD. (ISO 9001 Certified by LRQA)
4-7-5 Nionohama Otsu, 520-0801 Japan
TEL(077)524-6047 FAX(077)522-9022

OPTEX INCORPORATED
1845 W. 205th Street Torrance, CA 90501-1510 U.S.A.
TEL(310)533-1500 FAX(310)533-5910

OPTEX (EUROPE) LTD. (ISO 9002 Certified by NQA)
Clivemont Road, Cordwallis Park, Maidenhead, Berkshire, SL6 7BU U.K.
TEL(01628)631000 FAX(01628)636311

No. 75005-04-5130-9909

AL400ULX(R) Power Supply/Chargers

Rev. DSAL400ULX - F06G

Overview

- These multi-agency approved single output power supply/chargers convert a 115VAC/60Hz input into one (1) Class 2 Rated 12VDC or 24VDC power limited output.

AL400ULX
- Grey enclosure.

AL400ULXR
- Red enclosure.

Specifications

- 12VDC or 24VDC selectable output.
- 12VDC @ 4 amp or 24VDC @ 3 amp supply current.
- Class 2 Rated power limited output.
- Input 115VAC / 60Hz, 1.45 amp.
- Input fuse rated @ 3.5 amp/250V.
- Filtered and electronically regulated output.
- Short circuit and thermal overload protection.
- Built-in charger for sealed lead acid or gel type batteries.
- Maximum charge current .7 amp.
- Automatic switch over to stand-by battery when AC fails (zero voltage drop).
- AC fail supervision (form "C" contacts).
- Low battery supervision (form "C" contacts).
- Battery presence supervision (form “C” contacts).
- AC input and DC output LED indicators.
- Enclosure:
  - Combination knockouts are 1/2” and 3/4”
  - Accommodates up to two (2) 12VDC/7AH batteries.
- Product weight:
  - AL400ULX: 7.3 lbs.
  - AL400ULXR: 6.3 lbs.
- Shipping weight:
  - AL400ULX: 8.2 lbs.
  - AL400ULXR: 7.3 lbs.

Agency Approvals

UL 294	UL Listed for Access Control System Units.
UL 603	UL Listed Standard for Power Supplies for Use with Burglar-Alarm Systems.
UL 1069	UL Listed Hospital Signaling and Nurse Call Equipment.
UL 1481	UL Listed Standard for Safety for Fire Protective Signaling Systems.

CUL Listed - CSA Standard C22.2 No.205-M1983, Signal Equipment.

MEA - NYC Department of Buildings Approved.

CSFM - California State Fire Marshal Approved.

FM - Factory Mutual Approved.

Enclosure Dimensions

13.5”H x 13”W x 3.25”D

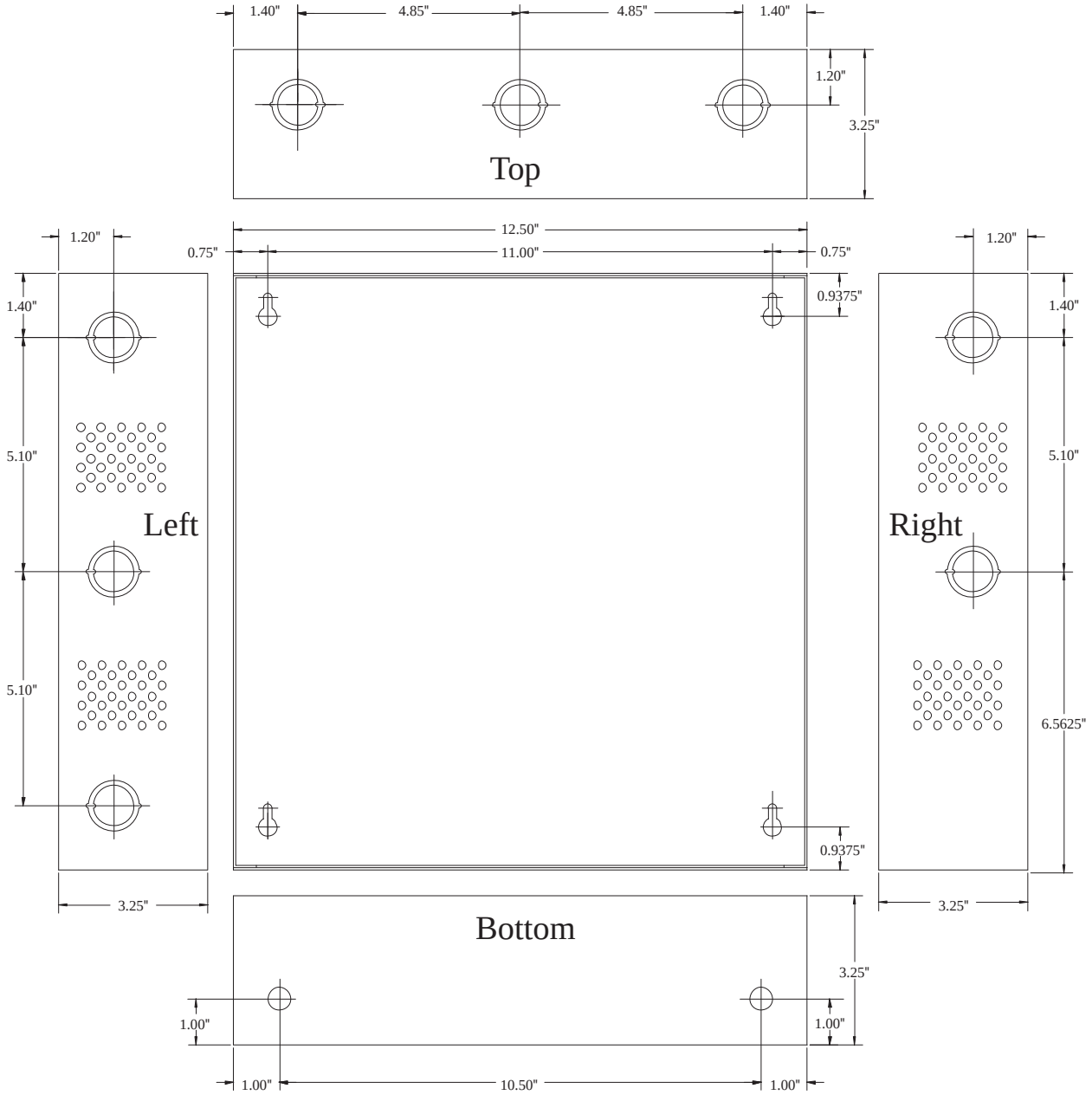

VISTA-128B

ADEMCO's VISTA-128B is an eight-partition, UL/CUL Commercial Burglary Control Platform that supports up to 128 zones using basic hardwired, polling loop, and wireless zones. It also includes zones for supervision of bells, keypads, RF receivers, and relays. In addition, the control offers scheduling capabilities and allows certain operations to be automated by pressing a single button. The system has the capability to interface with an ECP Long Range Radio unit that can send Contact ID messages and an alphanumeric paging device. When connected to ADEMCO's PassPoint system (via the Vista Gateway Module), the VISTA-128B provides a fully integrated security and access control system.

Commercial Burglary/CCTV and Access Control Platform

Applications
The VISTA-128B is well suited for a variety of applications as a burglary control and is supported by a diverse line of ADEMCO initiating devices. Some of the applications supported are medical and professional buildings, supermarkets, churches or synagogues, office buildings, schools, universities, strip malls, larger residences and factory or warehouse environments.

Installation
The VISTA-128B has been designed to mount quickly and easily and meets all applicable requirements for UL/CUL-Commercial Burglary installations. Use the Vista-ULKT kit when an attack resistant enclosure is required.

FEATURES:

- Provides nine style-B hardwired zones
- Supports up to 119 additional zones using a built-in polling (multiplex) loop interface
- Can control up to eight separate partitions independently, each functioning as if it had its own separate control
- Accommodates 150 user codes with seven authority levels
- Supports up to 128 wireless zones using a 5881 type RF receiver (fewer if using hardwired and/or polling loop zones)
- Supports the 5817CB Wireless Commercial Transmitter
- Supports the 5869 Wireless Commercial Burglary Hold-up switch
- Supports the 5881ENHC Wireless Commercial receiver
- Accommodates 32 keypad macro commands per system
- Keeps a log of up to 512 events
- Supports up to 16 two-wire smoke detectors on zone 1
- Supports up to 50 latching-type glassbreak detectors on zone 8
- Integrates with PassPoint access control to provide increased users, event log, and scheduling
- Supports VPLEX addressable VistaKey access control (up to 8 doors)
- Easily programmed and maintained using Compass Windows-based downloader
- Supports the ADEMCO 4286 VIP Module

ADEMCO GROUP

VISTA-128B

ADEMCO GROUP

Additional Features

Basic Hardwired Zones
Provides nine style-B hardwired zones with the following characteristics:
- EOLR supervision (optional for zones 2-8) supporting N.O. or N.C. sensors (EOLR supervision required for fire and UL burglary installations)
- Individually assignable to one of eight partitions
- Up to 16 two-wire smoke detectors on zone 1
- Four-wire smoke or heat detectors on zones 1-8 (power to four-wire smoke detectors must be supervised with an EOL device)
- Up to 50 two-wire latching glassbreak detectors on zone 8

Polling Loop Expansion
Supports up to 119 additional zones using a built-in polling (multiplex) loop interface. Current draw can total up to 128mA. Polling loop zones have the following characteristics:
- Must use RPM (Remote Point Module) devices
- Supervised by control panel
- Individually assignable to one of eight partitions

Wireless Expansion
Supports up to 128 wireless zones using 5881 type RF receiver (fewer if using hardwire and/or polling loop zones). Wireless zones have the following characteristics:
- Supervised by control panel for check-in signals (except certain non-supervised transmitters)
- Tamper protection for supervised transmitters
- Individually assignable to one of eight partitions

Scheduling
Provides the following scheduling capabilities:
- Open/close schedules (for control of arming/disarming and reporting)
- Holiday schedules (allows different time windows for open/close schedules)
- Timed events (for activation of relays, auto-bypassing and unbypassing, auto-arming and disarming, etc.)
- Access schedules (for limiting system access to users by time)
- End User Output Programming Mode (provides 20 timers for relay control)

Eight Partitions
Provides the ability to control eight separate areas independently, each functioning as if it had its own separate control. Partitioning features include:
- A Common Lobby partition (1-8), which can be programmed to arm automatically when the last partition that shares the common lobby is armed and to disarm when the first partition that shares the common lobby is disarmed
- A Master partition (9), used strictly to assign keypads for the purpose of viewing the status of all eight partitions at the same time (master keypads)
- All zones assignable to one of eight partitions
- Keypads assignable to one of eight partitions or to master partition 9 to view system status
- Ability to assign relays to one or all eight partitions
- Ability to display fire and/or burglary and panic and/or trouble conditions at all other partitions' keypads (selectable option)
- Certain system options selectable for each partition, such as entry/exit delay and subscriber account number

User Codes
Accommodates 150 user codes, all of which can operate any or all partitions. Certain characteristics must be assigned to each user code, which are as follows:
- Authority level (Master, Manager, or several other Operator levels) in each partition
- Opening/Closing central station reporting option
- What partitions the code can operate
- Global arming capability (ability to arm all partitions the code has access to in one command)
- Use of an RF (button) to arm and disarm the system (RF key must first be enrolled into the system)

Peripheral Devices
Supports up to 31 peripheral devices, which can be any combination of keypads (6139/6160), RF receivers (5881), relay modules (4204/4204CF), and 4286 VIP Module.
At least one two-line alpha keypad (6139/6160) must be connected to the system for programming (if using keypad programming) and must remain connected to the system in order to allow the primary user to program additional user codes into the system at a later time.

Keypad Macros
Accommodates 32 keypad macro commands per system (each macro is a series of keypad commands). For example, by pressing either the A, B, C, or D key, the system can be programmed to log onto another partition, bypass Zones 2 and 3, and arm that partition in the AWAY mode.
Characteristics of keypad macros are:
- Assignable to the A, B, and C keys by partition
- Other macros, (not assigned to these keys) executed by using the D key
- Each macro can be 32 characters (keystrokes) in length

Optional Output Relays
Accommodates the use of 96 relay outputs using ADEMCO's 4204, 4204CF Relay Modules and 4101SN VPLEX Relay Module. Each 4204 module provides four Form C relays for general purpose use. Each 4204CF provides two style-Y supervised bell outputs. Relay outputs have the following characteristics:
- Can be programmed to activate in response to system events
- Can be programmed to activate using time intervals
- Can be used for style-Y supervised bell outputs (4204CF only)
- Can be activated manually using the #70 Relay Command Mode
- Can be supervised by control panel (zones 601-632)
- Can each have an alpha descriptor assigned to it

Optional Vista Interactive Phone Module
Supports the ADEMCO 4286 VIP Module. This permits access to the security system from a touch tone telephone to do the following:
- Obtain system status information
- Arm and disarm security system
- Control relays

Optional Keyswitch
Supports the ADEMCO 4146 Keyswitch on any one of the system's eight partitions. If used, zone 7 is no longer available as a protection zone.

Voltage Triggers
Provides a trigger connector whose pins change state for different conditions. Used with LRR (Long Range Radio) equipment or other devices such as a remote keypad sounder, keyswitch ARMED and READY LEDs, or a printer to print the system's event log.

Event Log
Keeps a log of different event types (enabled in programming). The event log has the following characteristics:
- Stores up to 512 events
- Can be viewed at the keypad or through the use of Compass software
- Can be printed on a serial printer using a 4100SM Module including zone alpha descriptors
- Events can be sent to an alpha numeric pager, by event category

Cross-Zoning Capability
Helps prevent false alarms by preventing burglary zones from going into alarm unless its cross-zone is also faulted within five minutes.

Exit Error False Alarm Prevention Feature
- System can tell the difference between a regular alarm and an alarm caused by leaving an entry/exit door open. If not subsequently disarmed, faulted E/E zone (s) and/or interior zones will be bypassed and the system will arm
- Generates an Exit Error report by user and by zone so the central station knows it was an exit alarm and who caused it

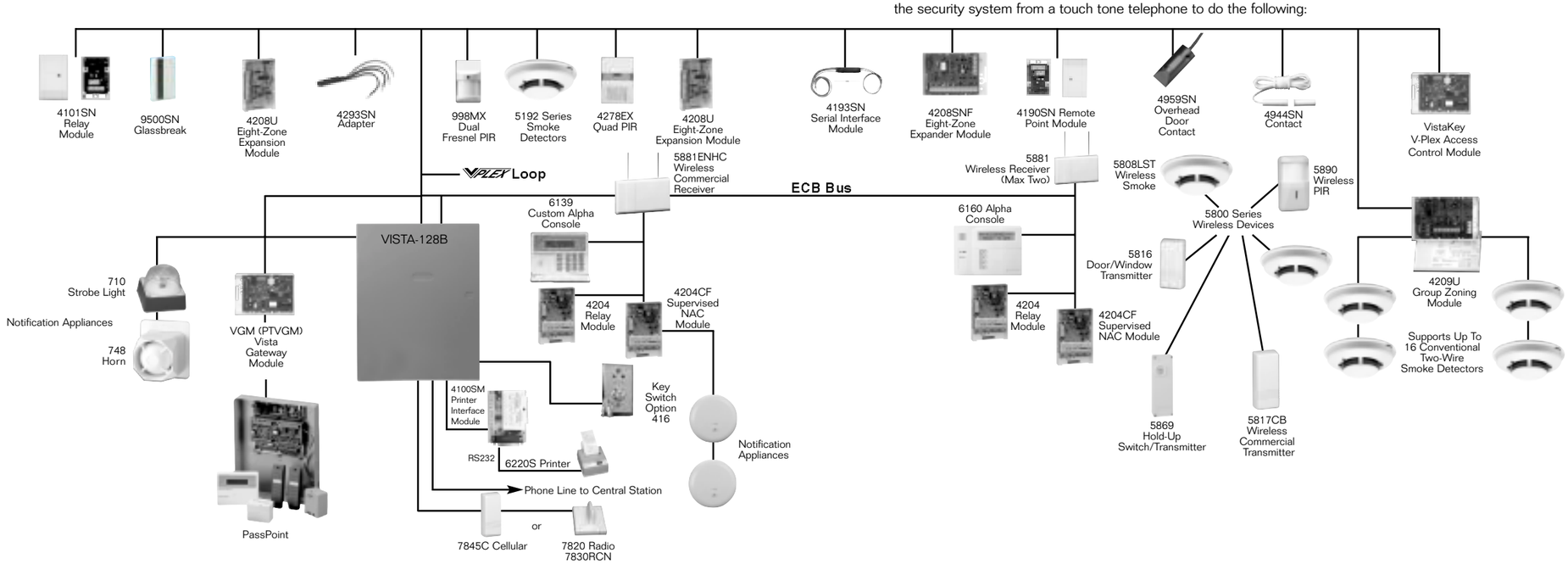

VISTA-128B

Communication Formats
Supports the following formats for the primary and secondary central station receivers:
- ADEMCO Low Speed (Standard or Expanded)
- ADEMCO High Speed
- ADEMCO Contact ID
- Sescoa/Radionics
- Long Range Radio interface (ECP)
- ADEMCO Express

Improved Downloading Features
- Uploads and downloads at 300 baud, making upload/download speed faster
- Ability to upload peripheral devices, their physical addresses, programmed addresses, and firmware revision levels from the control

CCTV: Switcher Module
- VistaView100

Access Control:
- VistaKey VPLEX (addressable) Access Control Module
- VistaKey-SK Starter Kit (Canada use VistaKey CNSK)
- VistaKey-EX Expansion Kit
- VGM Vista Gateway Module to PassPoint Access Control (Northern Computers) supports up to 32 doors

Agency Listings
- UL609 Grade A Local Mercantile Premises and Mercantile Safe and Vault*
- UL611/UL1610 Grades A, AA Central Station*
- UL365 Grades A, AA Police Connect*
- UL985 Household Fire*
- California State Fire Marshall (CSFM)
- CUL Household Fire/Burglary, and also Commercial Burglary
- UL1023 Household Burglary

** Requires Vista-ULKT Attack Resistant Enclosure*

Commercial Burglary/CCTV and Access Control Platform

SPECIFICATIONS:

Physical:
14-1/2" W X 18" H X 4.3" D

Electrical:
- Voltage Input: From ADEMCO No. 1361 Plug-In Transformer (use 1361CN in Canada) or 4300 transformer (for X-10 installations) rated 16.5VAC, 40 VA (For Canada use 1361CN transformer w/PSC04 for X-10 installations)
- Alarm Sounder Output: 10VDC-13.8VDC, 1.7 amps max., (UL1023, UL609 installations); 750mA less aux. current draw (UL985 installations)
- Auxiliary Power Output: 9.6VDC-13.8VDC, 750mA max. For UL installations, the accessories connected to the output must be UL Listed, and rated to operate in the above voltage range
- Backup Battery: 12VDC, 4AH or 7AH gel cell. YUASA NP4-12 (12V, 4AH) or NP7-12 (12V, 7AH) recommended
- Standby Time: 4 hours min. with 750 mA aux. load using 7 AH battery
- Circuit Protectors: PTC circuit breakers are used on battery input to protect against reverse battery connections and on alarm sounder output to protect against wiring faults (shorts). A solid state circuit breaker is used on auxiliary power output to protect against wiring faults (shorts)

Digital Communicator
- Formats Supported: ADEMCO High Speed, ADEMCO 4 + 2 Express, ADEMCO Low Speed, ADEMCO Contact ID, Sescoa and Radionics Low Speed

Line Seize: Double Pole

Ringer Equivalence: 0.7B

FCC Registration No.: AC398U-68192-AL-E
IC Industry Canada

6139 Remote Keypads/6160 Alpha Keypad
- Physical:
  - Width: 6.25 inches
  - Height 4.75 inches
  - Depth: 1.25 inches
- Electrical:
  - Voltage Input: 12VDC
  - Current Drain: 100 mA
- Interface Wiring:
  - RED: 12VDC input (+) auxiliary power
  - BLUE: Not used
  - GREEN: Data to control panel
  - YELLOW: Data from control panel
  - BLACK: Ground and (-) connection from supplemental power supply

Optional Equipment:
See ADEMCO Group control accessories compatibility chart for complete list.
- 4100APG Alpha Paging
- 7845C AlarmNet Control Channel Cellular Radio
- 7820 Long Range Radio (7830RCN in Canada)
- 4286 VIP Module
- 5881 RF Receivers
- Powerline carrier devices
- 6220S Serial Printer

ORDERING:

Part No.	Description
VISTA-128B	Commercial Partitioned Burglary Alarm Control Platform
VISTA-128CN (In Canada)	

165 Eileen Way, Syosset, NY 11791

Copyright ©2002 Pittway Corporation

ADEMCO is an ISO9001 Registered Company

ADEMCO GROUP

6160

ALPHA DISPLAY KEYPAD

WITH DOOR ATTACHED

WITHOUT DOOR

The 6160 Deluxe Keypad is easy to install and simple to use. The attractive white console blends with any décor and features a contoured, removable door that conceals illuminated soft-touch keys. The 6160 also features a new larger and brighter 32-character display with easy-to-read plain-English status messages.

The oversized function keys are easily accessed even when the keypad door is closed, and can be programmed for fire, burglary, personal emergencies and other operations. Colored self-adhesive labels are included.

FEATURES

- Large, easy-to-use keypad
- Keys continuously backlit for greater visibility
- Speaker with audible beeps to indicate:
  - System status
  - Entry/exit delay
  - Other alarm situations
- Zones and system events displayed in plain English
- No confusing blinking lights
- Four programmable function keys
- System functions clearly labeled
- Functions performed by just entering security code plus command
- White with removable door blends with any décor

SPECIFICATIONS

Physical

- 5-5/16"H x 7-3/8"W x 1-3/16"D (135mm x 190mm x 30mm)

Current

- Standby-40mA
- Activated Transmission-160mA

Wiring

- - (Black): Ground
- + (Red): +12 VDC (Aux. Power)
- D1 (Green): “Data in” to control panel
- D0 (Yellow): “Data out” from control panel

Compatibility

- Fully compatible with all VISTA controls.

ORDERING

6160	Alpha Display Keypad

Honeywell Security & Custom Electronics
Honeywell International Inc.
PO Box 9035
Syosset, NY 11791
www.honeywell.com

Honeywell

CO06010
L/6160/D
September 2006
© 2006 Honeywell International Inc.

DTK-TSS4

39kA/Φ Series Connected Surge Protector
General Product Specifications

DITEK's Total Surge Solution (TSS) is a range of products that provide total surge protection for addressable and conventional alarm systems.

The TSS4 protects 120V system power. The NEMA 4X enclosure makes the TSS4 ideal for harsh environments such as outdoor locations, chemical plants, and water treatment facilities.

DTK-TSS4

Application Features

- NEMA 4 weatherproof enclosure
- Series design for fast response and best protection
- Multi-stage hybrid circuit design
- User replaceable fusing for quick fault recovery
- EMI/RFI filtering included
- Compact design
- Meets government and military specs for fire panel application
- Screw terminal connections with safety covers
- LEDs indicate protection status, ground presence, ground fault indication and fuse status

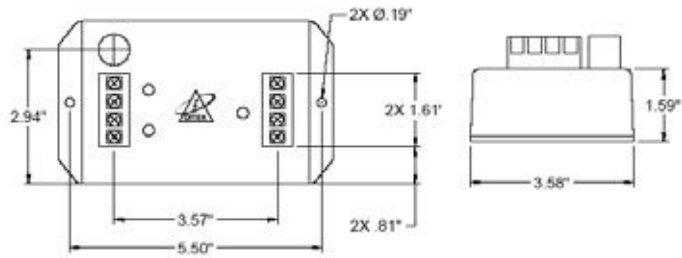

Product Features

- Agency Approvals: Listed by Wyle Labs to UL1449, 2nd Edition criteria
- Service Voltage: 120V
- MCOV: 130VAC
- Maximum Continuous Current: 20A
- EMI/RFI Attenuation
- Protection Modes: L-N, L-G, N-G
- Suppressed Voltage Rating: 500V
- Dimensions: 7" x 4" x 4" (178mm x 102mm x 102mm)
- Weight: 1lb (.45kg)
- Housing: ABS
- Warranty: Ten Year Limited Warranty

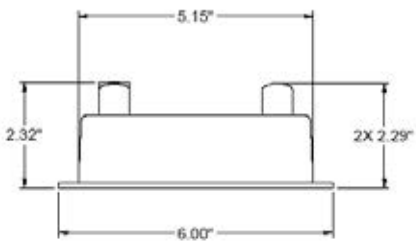

ISO 9001-2000 CERTIFIED Quality Manufacturer

NRTL wyle labs

One DITEK Center
1720 Starkey Road
Largo, FL 33771

1-800-753-2345 Direct 1-727-812-5000
Technical Support: 1-888-472-6100
www.ditekcorp.com

Document: SPS-100007-001 Rev 2 4/06

©2006 DITEK Corp.
Specification Subject to Change

4208SN

Serialized Eight Zone Remote Point Module

The 4208SN Remote Point Module (RPM) is an eight-zone expander that allows the use of available expansion zones on ADEMCO controls that support V-Plex polling loop devices.

FEATURES

- Can be used on controls that support up to 250 zones
- Can be optionally powered from an external DC power supply to reduce the amount of current draw from the polling loop
- Uniquely identifies eight EOLR supervised zones (all zones use 10K resistors, supplied)
- Each zone is identified by a unique serial number, which is assigned via on-board DIP Switches
- Detects faults on all zones within 400ms of occurrence
- Loops A & B can be programmed for fast (10ms) response
- Provides cover tamper protection, which may be enabled or disabled via on-board DIP Switches

SPECIFICATIONS

Physical

- 6-7/16"W X 4-1/4"H X 1-1/4" D 163mm x 108mm x 32mm

Electrical

Polling Loop Voltage

- 11V nominal; 8.7 - 14VDC range

Current

- 33.6mA when polling loop provides power to module, 0.6mA when 12VDC input provides power to module. See chart below.

12VDC Input Voltage

- 12V nominal; 9.4 - 14VDC range

Expander Sensor Loop Response

- Slow: 400msec (all loops)
- Fast: 10msec (option for loops A and B)

Expander Sensor Loop Current

- 0.52mA (normal)
- 1.3mA (shorted)

NOTE: These currents apply when polling loop input = 11VDC and 10VDC input is not connected to external supply

Sensor Loop Max. Resistance

- Up to 300 ohms of wire resistance + 10K EOLR

Agency Listings

- UL 985 Household Fire
- UL 1023 Household Burglary
- UL 609 Commercial Burglary
- UL 864 Commercial Fire
- CSFM
- FM (Pending)
- CUL
- CE (requires #N6361)

Power Input Source	Current Draw (all zones shorted)	
	From Polling Loop	From External Power
Polling Loop Only	33.6m	AN/A
Polling Loop and External Power Input	0.6mA	33mA

For UL Listed Commercial Fire Usage:
Use N.O. contacts. Style B supervise these loops using Model #EOL 100 fire listed 10K EOLRs (purchased separately).

For UL Listed Commercial Burglary Usage:
Use N.O. or N.C. contacts. Supervise using EOLRs supplied.

ORDERING

4208SN Eight Zone Expander

Honeywell

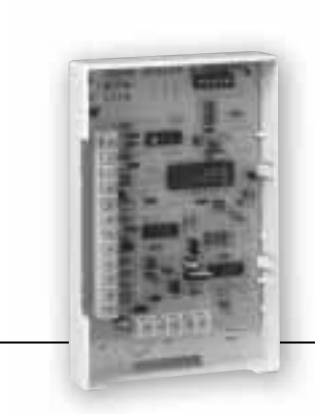

4208U

Universal Eight Zone Remote Point Module

The 4208U Remote Point Module (RPM) is an eight-zone expander that allows the use of available expansion zones on ADEMCO controls that support V-Plex polling loop devices.

FEATURES

- Can be optionally powered from an external DC power supply to reduce the amount of current draw from the polling loop
- Uniquely identifies eight EOLR supervised zones (all zones use 10K resistors, supplied)
- DIP Switches can be used to set zone numbers or serial numbers
- When used in the serial number mode, each serial number in the selected group can be assigned to any zone number
- Loops A & B can be programmed for fast (10msec) response
- Provides cover tamper protection, which may be enabled or disabled via on-board DIP Switches

SPECIFICATIONS

Physical

- 6-7/16" W X 4-1/4"H X 1-1/4"D 163mm X 108mm X 32mm

Electrical

Polling Loop input:

- 7.3 - 14VDC range

Current draw:

- 28.6mA max. External power and polling loop. See chart below.

External Power Input (optional):

- 12VDC @ 28mA (from control panel's auxiliary power)

Sensor Loop Response:

- Slow: 400 msec (all loops)
- Fast: 10msec (option for loops A and B)

Sensor Loop Current:

- Polling loop input = 11VDC, no external power input):0.52mA (normal), 1.3mA (shorted)

Sensor Loop Max. Current:

- Up to 300 ohms of wire resistance + 10K EOLR

Agency Listings

- UL 985 Household Fire
- UL 1023 Household Burglary
- UL 609 Commercial Burglary
- UL 864 Commercial Fire
- CSFM
- FM
- CUL
- CE (requires #N6361)

Power Input Source (Input Voltage: 11-14VDC)	**Current Draw** (all zones shorted)	
	From Polling Loop	**From External Power**
Polling Loop Only	27.3mA	N/A
Polling Loop and External Power Input	0.6mA	33mA

For UL Listed Commercial Fire Usage: Use N.O. contacts. Style B supervise these loops using Model #EOL 100 fire listed 10K EOLRs (purchased separately).

For UL Listed Commercial Burglary Usage: Use N.O. or N.C. contacts. Supervise using EOLRs supplied.

ORDERING

4208U Eight Zone Expander

Honeywell Security & Custom Electronics
PO Box 9035,
Syosset, NY 11791
www.security.honeywell.com/sce

Honeywell

L/4208FAM/D
November 2004
©2004 Honeywell International Inc.

HUSK-20

LATCHING HOLD-UP SWITCH

- Form C contact
- Metal housing
- Key reset
- Silent operation
- Status window indicator (armed, alarmed)
- Mechanical operation
- Terminals for easy wiring

The HUSK-20 is a mechanical hold-up switch designed for silent operation. It is activated by using one finger to press down on the switch. When activated, the switch mechanism locks, insuring an immediate alarm signal. A status window designed on top of the hold-up switch indicates its condition: RED (alarmed) and BLUE (armed). To reset the HUSK-20, use the key provided. The housing is made of metal and is painted gray.
The hold-up switch sends a signal to a dedicated 24 hour hold-up circuit of a burglar control panel. That signal in turn will send the immediate signal to police or central station.

Dimensions

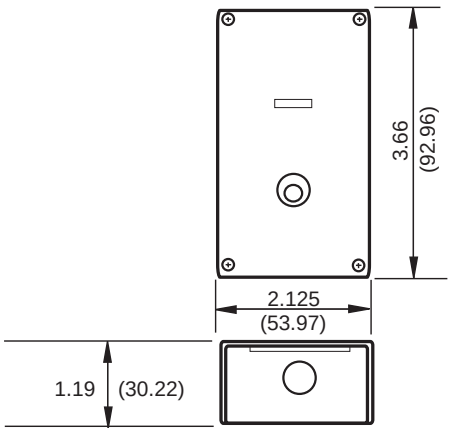

Typical Wiring

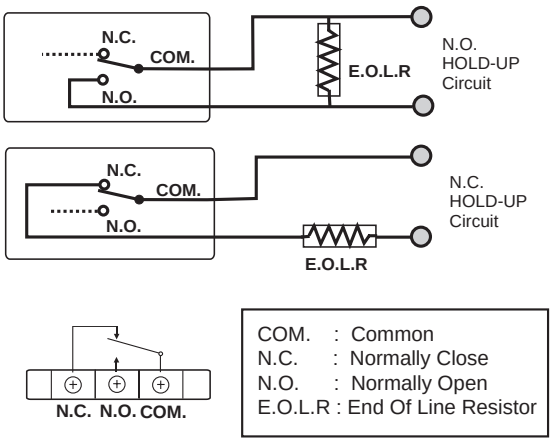

Specifications

Model Number	Stock Number	Contact Type	Contact Rating			Screw Terminals Capacity	Operating Temperature Range
			125V DC	30V DC	125V AC		
HUSK-20	4370038	N.O./N.C.	0.4A	5A	5A	AWG #18	-40°F - 257°F (-40°C - 125°C)
KEY	4370039						

Potter Electric Signal Company • 2081 Craig Road, St. Louis, MO, 63146-4161 • Phone: 800-325-3936/Canada 888-882-1833 • www.amseco-kai.com

DOOR CHANNEL MAGNET

MC-180 SERIES

- The MC-180 is designed to be mounted in the top channel of a metal entry/exit door.
- Legs of the magnet case can be clipped to accommodate a more shallow channel.

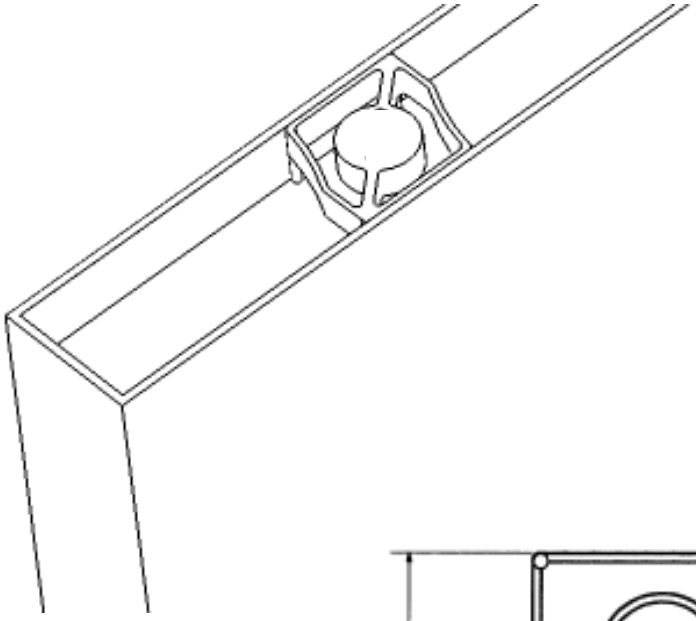

MC-180 UL 10C

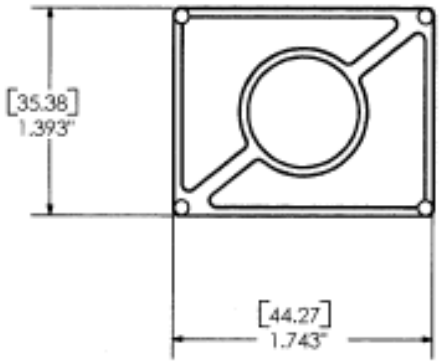

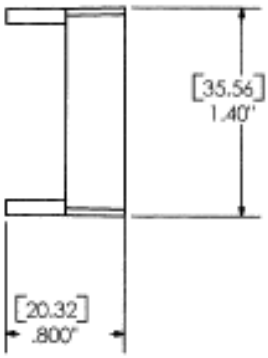

WARRANTY:
Lifetime warranty against workmanship, material and factory defects.

GEORGE RISK INDUSTRIES, INC.
G.R.I. PLAZA
KIMBALL, NE 69145

MADE IN U.S.A.

TOLL-FREE 1-800-445-5218
TOLL-FREE 1-800-523-1227
(308) 235-4645
FAX (308) 235-3561
E-MAIL: grisales@megavision.com
WEB SITE: www.grisk.com

DOOR CHANNEL MAGNET

MC-180 SERIES

- The MC-180 is designed to be mounted in the top channel of a metal entry/exit door.
- Legs of the magnet case can be clipped to accommodate a more shallow channel.
- UL 10C Indicates U.L. 10C Fire Rated

180MC-12 UL 10C

8080-TMC

MC-180 UL 10C

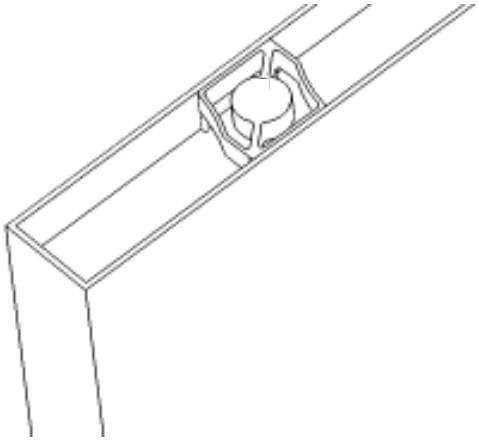

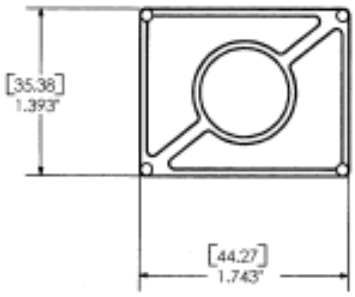

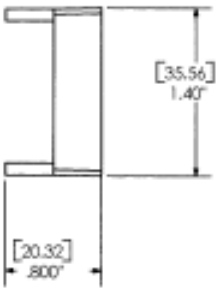

PART NUMBERS:

		Closed Loop	Open Loop	SPDT	DPDT
Standard Gap Up To 1"	3/4" Dia.	180MC-12 UL 10C	185MC-12	190MC-12	195MC-12
On Steel	1" Dia.	184MC-12	189MC-12	194MC-12	199MC-12
	3/4" Dia.	8080-TMC	8585-TMC		
	1" Dia.	8484-TMC	8989-TMC		

WARRANTY:

Lifetime warranty against workmanship, material and factory defects.

GEORGE RISK INDUSTRIES, INC.
G.R.I. PLAZA
KIMBALL, NE 69145

TOLL-FREE 1-800-445-5218
TOLL-FREE 1-800-523-1227
(308) 235-4645
FAX (308) 235-3561
E-MAIL: grisales@megavision.com
WEB SITE: www.grisk.com

MADE IN U.S.A.

BA-168 Rev B 5/19/04

1

GENIUS PLUS

DOUBLE LINEAR

IMAGING TECHNOLOGY

PIR SENSOR

N345

CE

CROW

ELECTRONIC ENGINEERING LTD.

INSTALLATION INSTRUCTIONS
P/N: 7101329 Rev. G A.Y.

2

GENERAL DESCRIPTION

This DOUBLE QUAD ELEMENT PIR detector is based on the latest "ASIC" (Application Specific Integrated Chip) and SMD technologies. The GENIUS PLUS monitors the environment by analyzing the conditions and adapts to it constantly. If conditions change, the GENIUS PLUS adapts it maintaining sensitivity levels and detection capability.
By using DOUBLE QUAD Optic Systems with a diagonally opposed configuration (phase shift discrimination), the GENIUS PLUS is able to achieve a three dimensional thermal image of the protected area. It stores this image and refers to it determine intrusions.
During the standby mode (no LED indications) the GENIUS PLUS constantly monitors the protected area, updating and reconfiguring itself as conditions change.

3

GENIUS PLUS FEATURES

- Double Quad Linear Imaging Technology for sharp analysis of body dimensions and differentiation from background and animals.
- Immunity to animals up to 5kg (11 lbs).
- High RF and EM Immunity.
- Environmental immunity.
- 15m (49.2 ft) Detection Range with Wide Angle Lens
- Temperature compensation.
- Compact Design for Residential Installation
- Variable pulse width adjustment.
- Sensitivity adjustment.
- Height installation calibrations free from 1.8m (5.9 ft) to 2.7m (8.9 ft).

4

MOUNTING LOCATION

Choose a location most likely to intercept an intruder. See the detection patterns in Fig. 5. The twin dual element high quality sensors detect motion across the beam field; they are slightly less sensitive to motion towards the detector.

While the GENIUS PLUS is capable of detecting intrusions under exceedingly difficult conditions, it is recommended to avoid the following locations:

- Areas where sunlight may shine directly onto the PIR (lens).
- Facing surfaces that may change temperature extremely rapidly.
- Areas with extreme airflows.

NOTE: Recommended installation height – 2.4m (7.9ft).

5

FIG. 1 – REMOVAL THE FRONT COVER

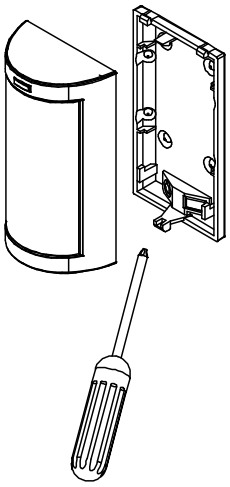

6

MOUNTING THE DETECTOR

A variety of mounting positions is possible with the standard GENIUS PLUS housing.

1. Open the front cover by pushing with screwdriver the holding pin at the middle of its lower surface and lifting upwards.
2. Snap out the detector PCB.
3. The GENIUS PLUS housing can be mounted in a variety of ways. The circular indentations in the housing indicate mounting holes to be punched out in accordance with the desired mounting position:
4. For surface mounting punch out the 4 indentations marked " B " (see Fig. 2).
5. For Corner mounting gives 45° angle on either the right or the left side. Punch out the indentations marked " C " (see Fig. 2)

7

6. The circular and rectangular indentations at the bottom base are the knockout hole for wire entry. You may also use mounting holes that are not in use for running the wiring into the detector.
7. To close the front cover, insert the two small prongs along its upper edge into their corresponding slots in the upper edge of the base. Insert the larger prong at the bottom of the front housing into the slot at the bottom of the base by exerting slight pressure on the prong. The front cover should now fit snugly into the base.

For detector installation it is recommended to use set of screws and plastic anchors supplied with the detector.

CAUTION: ***using different or bigger screws can damage*** the electronic board.

8

FIG. 2 - OPTIONAL HOLES

The plastic base include different types of knockdown holes:

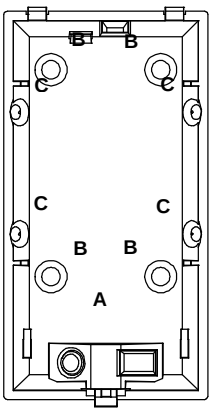

A. Wire access holes
B. Use for flat wall mounting
C. Corner mounting - use all 4 holes.

9

FIG. 3 - TERMINAL BLOCK CONNECTIONS

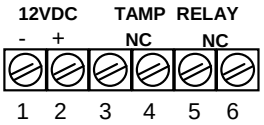

Terminal 1 - Marked " - " (gnd)
Connect to ground of the control panel.

Terminal 2 - Marked " + " (+12V)
Connect to a positive Voltage output of 8.2 -16Vdc source (usually from the alarm control unit)

Terminals 3 & 4 - Marked " TAMPER "
If a Tamper function is required connect these terminals to a 24-hour normally closed protective zone in the control unit. If the front cover of the detector is opened, an immediate alarm signal will be sent to the control unit.

Terminals 5 & 6 - Marked " RELAY "
These are the output relay contacts of the detector. Connect to a normally closed zone in the control panel.

10

FIG. 4 – GENIUS PLUS PCB LAYOUT

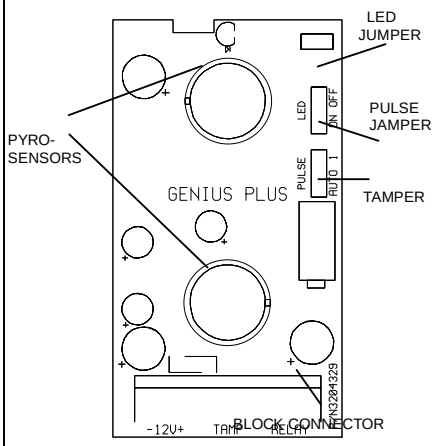

11

JUMPER SWITCHS SETTING

Pulse Jumper - Provides control for normal or high risk operating environments.

This setting is for a stable environment without air drafts.

The GENIUS PLUS will automatically select the appropriate pulse count level according to the strength of the incoming signals.

This setting is for operation in a harsh environment with air drafts or with a small animal less then 25cm (0.8ft) in height and less then 5kg (11.02lbs).

In AUTO mode, the GENIUS PLUS will increase its sampling rate and take more factors into account.

LED Jumper – LED control selection

LED ENABLE - The LED will light when the GENIUS PLUS Is in alarm condition.

LED DISABLE - The LED is disabled.

12

WIRE SIZE REQUIREMENTS

Use #22 AWG (0.5 mm) or wires with a larger diameter. Use the following table to determine required wire gauge (diameter) and length of wire between the detector and the control panel.

Wire Length	m	200	300	400	800
Wire Diameter	mm	.5	.75	1.0	1.5
Wire Length	ft.	800	1200	2000	3400
Wire Gauge	#	22	20	18	16

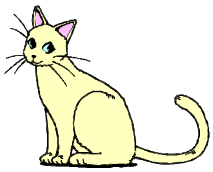

The GENIUS PLUS provides PET immunity up to 5Kg (11.02 lbs).

13

FIG. 5 – WIDE ANGLE LENS PATTERN

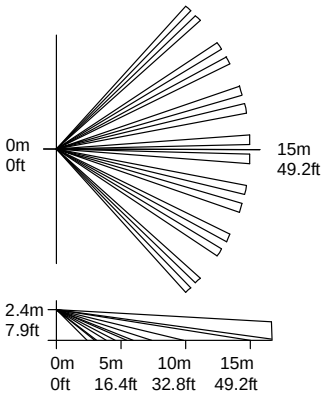

14

WA LENS PATTERN

COVERAGE	WIDE ANGLE 90° 15m x 22m 49.2ft x 72.2ft
TOTAL DETECTION ZONES	42

IMPORTANT:

In an environment with a small animal:

1. The GENIUS PLUS has to be mounted at 2.4m (7ft.) or higher (max 2.7m or 7.9ft.) above floor level.
2. Install the GENIUS PLUS vertically (not tilted forward).
3. Away from furniture 2.4m (7.9ft.) or more, on which a small animal may jump.
4. Not facing a staircase, ladder or similar object which can be part of the monitored environment (the vertical motion of the animal may be interpreted by the detector as an actual intruder).
5. Flip jumper switch “PULSE to the “AUTO” (down) position for a harsh environment.

15

TEST PROCEDURES

WAIT ONE MINUTE WARM-UP TIME AFTER APPLYING 12 VDC POWER. CONDUCT TESTING WITH THE PROTECTED AREA CLEARED OF ALL PEOPLE.

Walk test

- Remove front cover.
  The pulse jumper must be in position 1.
  The LED must be enabled.
- Replace the front cover.
- Start walking slowly across the detection zone.
- Observe that the detector’s LED lights whenever motion is detected.
- Allow 5 sec. between each test for the detector to stabilize.
- After the walk test is completed, the LED may be disabled.

NOTE:
walk tests should be conducted, at least once a year, to confirm proper operation and coverage of the detector.

16

TECHNICAL SPECIFICATIONS

Power input	8.2 - 16VDC
Current consumption Standby Active	 13mA at 12VDC 8.5mA at 12VDC
Detection speed	0.15 to 1.8m/sec (0.5 to 6 ft./sec)
Alarm output	N.C 50mA at 24VDC 27ohm in line resistor
Tamper switch	N.C 50mA at 24VDC 10ohm in line resistor
Operating temperature	-20°C to 50°C (-4°F to 122°F)
Operating humidity	Up to 95% (non-condensing)
Storage temperature	-40°C to 80°C (-40°F to 176°F)
Detection method	2 matching dual element with double optic system
RFI protection	≥30V/m at 10 to 1000MHz
EMI immunity interference	50,000Volt electrical due to power surges or lighting
LED Indicator	LED is blinking 8 time during warm up period and self testing 12 Sec. LED is ON during alarm.
Dimensions	88 x 48 x 33mm (3.46” x 1.9” x 1.3”)
Weight	53 gr. (1.9 oz)

***CROW* reserves the rights to change specifications without prior notice**

17

CROW ELECTRONIC ENGINEERING LTD. ("Crow") –

WARRANTY POLICY CERTIFICATE

This Warranty Certificate is given in favor of the purchaser (hereunder the "**Purchaser**") purchasing the products directly from Crow or from its authorized distributor.

Crow warrants these products to be free from defects in materials and workmanship under normal use and service for a period of 24 months from the last day of the week and year whose numbers are printed on the printed circuit board inside these products (hereunder the "**Warranty Period**").

Subject to the provisions of this Warranty Certificate, during the Warranty Period, Crow undertakes, at its sole discretion and subject to Crow's procedures, as such procedures are form time to time, to repair or replace, free of charge for materials and/or labor, products proved to be defective in materials or workmanship under normal use and service. Repaired products shall be warranted for the remainder of the original Warranty Period.

All transportation costs and in-transit risk of loss or damage related, directly or indirectly, to products returned to Crow for repair or replacement shall be borne solely by the Purchaser.

Crow's warranty under this Warranty Certificate does not cover products that is defective (or shall become defective) due to: (a) alteration of the products (or any part thereof) by anyone other than Crow; (b) accident, abuse, negligence, or improper maintenance; (c) failure caused by a product which Crow did not provide; (d) failure caused by software or hardware which Crow did not provide; (e) use or storage other than in accordance with Crow's specified operating and storage instructions.

There are no warranties, expressed or implied, of merchantability or fitness of the products for a particular purpose or otherwise, which extend beyond the description on the face hereof.

This limited Warranty Certificate is the Purchaser's sole and exclusive remedy against Crow and Crow's sole and exclusive liability toward the Purchaser in connection with the products, including without limitation - for defects or malfunctions of the products. This Warranty Certificate replaces all other warranties and liabilities, whether oral, written, (non-mandatory) statutory, contractual, in tort or otherwise.

In no case shall Crow be liable to anyone for any consequential or incidental damages (inclusive of loss of profit, and whether occasioned by negligence of the Crow or any third party on its behalf) for breach of this or any other warranty, expressed or implied, or upon any other basis of liability whatsoever. Crow does not represent that these products can not be compromised or circumvented; that these products will prevent any person injury or property loss or damage by burglary, robbery, fire or otherwise; or that these products will in all cases provide adequate warning or protection.

Purchaser understands that a properly installed and maintained product may in some cases reduce the risk of burglary, fire, robbery or other events occurring without providing an alarm, but it is not insurance or a guarantee that such will not occur or that there will be no personal injury or property loss or damage as a result.

Consequently, Crow shall have no liability for any personal injury; property damage or any other loss based on claim that these products failed to give any warning.

If Crow is held liable, whether directly or indirectly, for any loss or damage with regards to these products, regardless of cause or origin, Crow's maximum liability shall not in any case exceed the purchase price of these products, which shall be the complete and exclusive remedy against Crow.

18

CROW ELECTRONIC ENGINEERING LTD.

ISRAEL: 57 Hamelacha St., Holon 58855
Tel: 972-3-5569937 /8 /9
Fax: 972-3-5592981
E-mail: support@crow.co.il

USA: 2160 North Central Road,
Fort Lee, N.J. 07024
Tel: 1-800-GET CROW
or (201) 944 0005
Fax: (201) 944 1199
E-mail: support@crowelec.com

AUSTRALIA: 429 Nepean HWY Brighton East Vic 3187
Tel: 61-3-9596 7222
Fax: 61-3-9596 0888
E-mail: crow@crowaust.com.au

POLAND: VIDICON SP. ZO. O.
15 Povazkowska St.
01 – 797 Warsaw Poland
Tel: 48 22 562 3000
Fax: 48 22 562 3030
E-mail: vidicon@vidicon.pl

LATIN AMERICA: CROW LATIN AMERICA
5753 NW 151ST.Street
MIAMI LAKES,
FL 33014 – USA
Tel: +1-305-823-8700
Fax: +1-305-823-8711
E-mail: sales@crowlatinamerica.com

ITALY: DEATRONIC
VIA Giulianello 4/14
00178 ROMA, ITALY
Tel: +39-0676-12912
Fax: +39-0676-12601
E-mail: info@deatronic.com

These instructions supersede all previous issues in circulation prior to February 2005.

SELF-CONTAINED SIREN/SPEAKER

MPI-37

SPECIFICATIONS

moose

APPLICATION

The MPI-37 Is A Two Channel Self-Contained Electronic Siren Driver/Speaker Combination. Ideal For Inside Or Outside Installation.

FEATURES:

- Self-Contained Siren Driver/ Speaker
- Inside Or Outside Installation
- Color Coordinated Beige Color

SPECIFICATIONS

- Dual Tones — Yelp And Steady (Steady Overrides Yelp)
- 6 Or 12 Volts DC Operation
- 106 db At 10 Feet Sound Output
- Metal Swivel Mounting Bracket
- Weather Resistant
- Measures - 6 Inches Long x 5¼ Inches Diameter
- Temperature Range: —22 To +122 Degrees F (—30 To +50 Degrees C).
- Current Drain: 6V - 400 Ma.
  12V - 800 Ma.

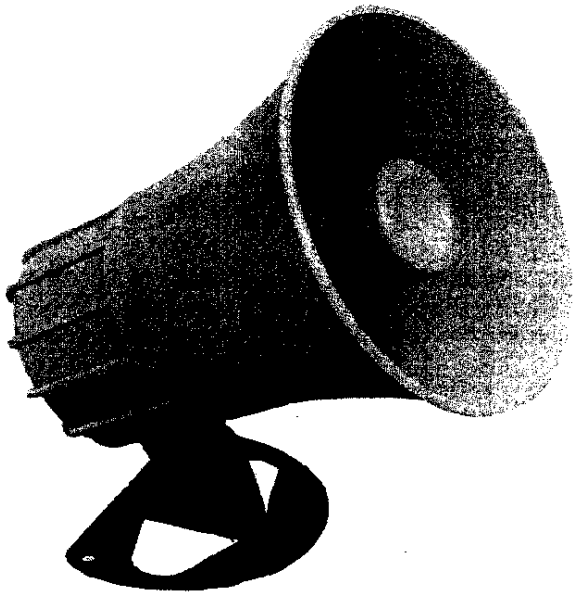

L604

Printed In U.S.A. — 4/84

1510 Tate Boulevard, S.E. • P.O. Box 2904 • Hickory, N.C. 28603
Phone (704) 322-2333 • Toll Free (800) 438-8175
Telex 802-111

moose products inc.

RECESSED 3/4" SWITCH SET

120T-12/4473 SERIES

3/4" Switch, 3/8" Magnet For Wooden or Aluminum Door & Windows

- ◆ Recessed Magnetic Contact
- ◆ Press To Fit
- ◆ 12" #22AWG Leads or Screw Terminals
- ◆ Longer Leads, Zip Cord or Jacketed Cable Upon Request
- ◆ Hermetically Sealed
- ◆ Plated Contacts Resist Sticking or Freezing
- ◆ Built-in E.O.L. Resistors and Diodes Upon Request
- ◆ Supervisory Loops Upon Request
- ◆ Switches and Magnets Available Separately
- ◆ Colors: White, Brown, Gray, Black
- ◆ Lifetime Warranty

MM-9RS **120T-12** UL LISTED ULC LISTED

MM-9RS **4473**

PART NUMBERS

	Closed Loop	Open Loop	SPDT
Standard Gap 1/2"+	120T-12 4473	130T-12	140T-12
Wide Gap 3/4"+	120T-12WG	130T-12WG	140T-12WG
Extra Wide Gap 1 1/2"+	120T-12XWG	130T-12XWG	140T-12XWG

GEORGE RISK INDUSTRIES, INC.
G.R.I. PLAZA
KIMBALL, NE 69145

MADE IN U.S.A.

TOLL-FREE 1-800-445-5218
TOLL-FREE 1-800-523-1227
(308) 235-4645
FAX (308) 235-3561
E-MAIL: grisales@megavision.com
WEB SITE: www.grisk.com

RECESSED 3/4" SWITCH SET

INSTALLATION INSTRUCTIONS:

The 120T-12/4473 requires that a 3/4" hole be drilled for the switch and a 3/8" hole for the magnet. The 3/4" switch mounting is desirable since the extra wire and connections can be more easily inserted into the larger hole for concealment. Also, should the need arise for testing or replacement, it would be easy to pull the switch, extend the extra wire and access the original connections.

Installation is further enhanced by using a smaller 3/8" diameter magnet to avoid the need to center a larger hole in a 1" to 1 1/2" thick door or window. This will allow you to offset the magnet should it be required.

The 120T-12/4473 switch set was developed for and should only be used in openings with wooden or aluminum frames.

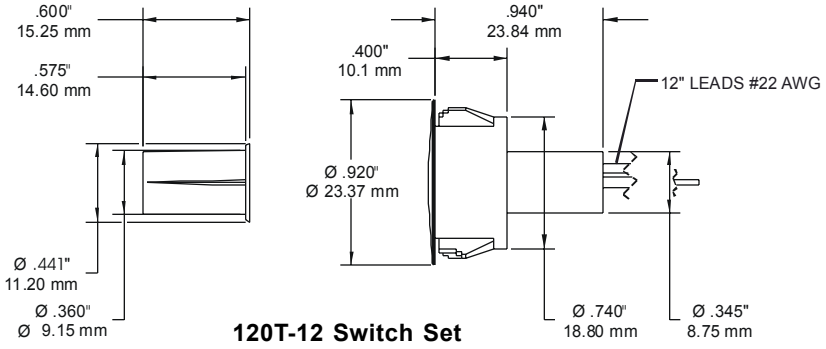

120T-12 Switch Set

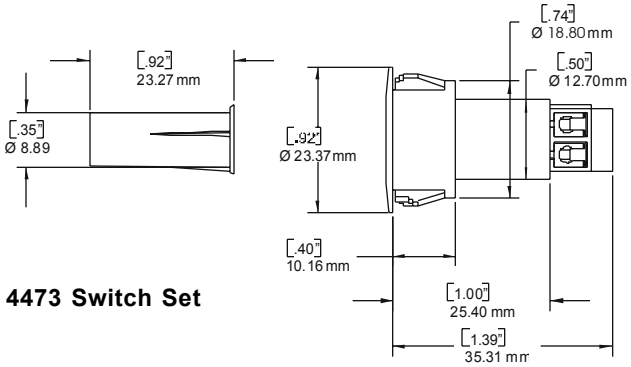

4473 Switch Set

GRI products meet or exceed these minimum general specifications:

PART NUMBER	LOOP TYPE	SWITCH ELECTRICAL CONFIG.	REED FORM	MAXIMUM INITIAL CONTACT RESISTANCE (Ω)	MAXIMUM CONTACT RATING (W)	MAXIMUM SWITCHING VOLTAGE (VDC/VAC)	MAXIMUM SWITCHING CURRENT (A)
120T-12	Closed	N/O	A	.150	10	200/140	.500
120T-12WG	Closed	N/O	A	.150	10	200/140	.400
120T-12XWG	Closed	N/O	A	.150	10	160/110	.400
4473	Closed	N/O	A	.150	10	200/140	.500
130T-12	Open	N/C	B	.140	5	175VDC	.250
130T-12WG	Open	N/C	B	.140	5	175VDC	.250
130T-12XWG	Open	N/C	B	.140	5	175VDC	.250
140T-12	Open/Closed	SPDT	C	.140	5	175VDC	.250
140T-12WG	Open/Closed	SPDT	C	.140	5	175VDC	.250
140T-12XWG	Open/Closed	SPDT	C	.140	5	175VDC	.250

WARRANTY:

Lifetime warranty against workmanship, material and factory defects

Contact your GRI Distributor or call:

GEORGE RISK INDUSTRIES, INC.
GR.I. PLAZA
KIMBALL, NE 69145

TOLL-FREE 1-800-445-5218
TOLL-FREE 1-800-523-1227
(308) 235-4645
FAX (308) 235-3561
E-MAIL: grisales@megavision.com
WEB SITE: www.grisk.com

MADE IN U.S.A.

BA-59 Rev M 10/03/06

STI Motion Detector Damage Stopper®

STI-9618

STI-9621

PRODUCT OVERVIEW

These super tough cages are extremely effective in reducing malfunctions and high maintenance costs where vandalism or accidental damage is prevalent. They are constructed of 9-gauge steel wire with corrosion-resistant polyester coating. Five sizes are available. Two sizes are designed to fit motion detectors for corner mount units and three are for wall mount applications.

BACKED BY A THREE YEAR GUARANTEE

As all STI protective covers, these Motion Detector Damage Stoppers are backed by a three year guarantee against breakage in normal use. Installation and servicing are easy. They are highly recommended for areas where abuse to PIR detectors is severe.

FEATURES

- Helps prevent vandalism or accidental damage to PIR's.
- Construction of 9-gauge coated steel wire.
- Fast and easy installation.
- May be spray painted only once prior to installation to match decor.
- Simple removal for servicing detector.
- Five models to fit virtually all PIR detectors.
- Tamper resistant hardware is available.
- Three year guarantee against breakage in normal use.

STI Motion Detector Damage Stopper®

Dimensions and Technical Information

MODELS AVAILABLE

STI-9618	Motion Detector Damage Stopper - Corner Mount
STI-9619	Motion Detector Damage Stopper - Corner Mount
STI-9620	Motion Detector Damage Stopper
STI-9621	Motion Detector Damage Stopper
STI-9622	Motion Detector Damage Stopper
SUB-82	4 tamper resistant stainless steel screws, #8 X 1 1/2 " snake eye
19038	Tamper bit for tamper resistant screws

MODEL	HEIGHT	WIDTH	DEPTH
STI-9618	4.62 in. (117 mm)	5.37 in. (136 mm)	3 in. (76 mm)
STI-9619	7.75 in. (196mm)	5.37 in. (136mm)	5.62 in. (142 mm)
STI-9620	6.25 in. (158 mm)	4.0 in. (102 mm)	2.25 in. (57 mm)
STI-9621	7.0 in. (178 mm)	5.75 in. (146 mm)	4.5 in. (114 mm)
STI-9622	8.75 in. (222 mm)	4.0 in. (102 mm)	3.75 in. (95 mm)

WARRANTY

Three year guarantee against breakage in normal use.

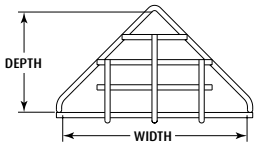

STI-9618 TOP VIEW

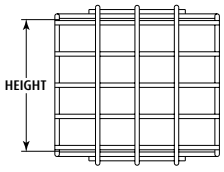

STI-9618 FRONT VIEW

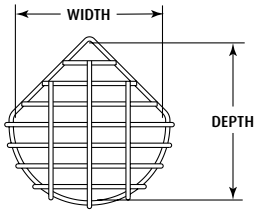

STI-9619 TOP VIEW

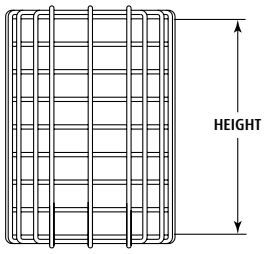

STI-9619 FRONT VIEW

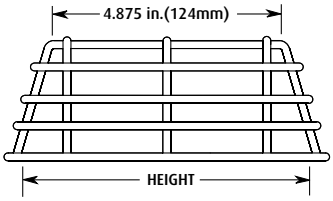

STI-9620 SIDE VIEW

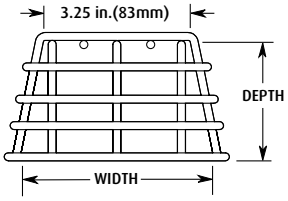

STI-9620 END VIEW

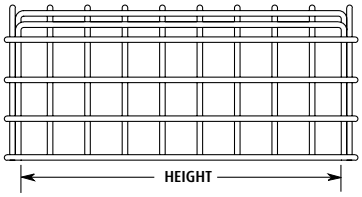

STI-9621/9622 SIDE VIEW

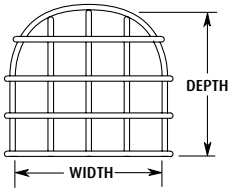

STI-9621/9622 END VIEW

Safety Technology International, Inc.

2306 Airport Road
Waterford, Michigan
48327, USA

Tel: 248-673-9898
Fax: 248-673-1246
Tollfree: 800-888-4784
info@sti-usa.com
www.sti-usa.com

Unit 49G Pipers Road
Park Farm Industrial Estate
Redditch, Worcestershire
B98 OHU England

Tel: 44 (0) 1527 520 999
Fax: 44 (0) 1527 501 999
Free: 0800 085 1678 (UK)
www.sti-europe.com

Printed in U.S.A., © 2009 Safety Technology International, Inc.

Subject to change without notice. 06/09

DOOR POSITION SIGNALLING

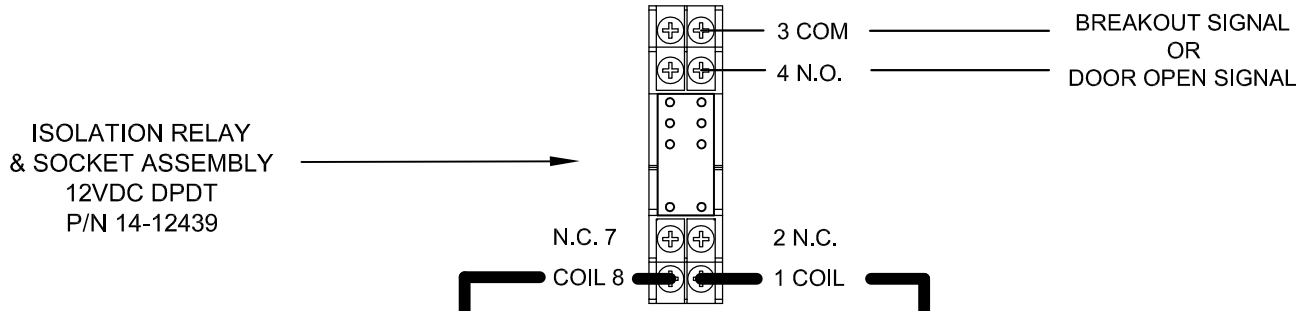

Battery back power required for the 1175 Unit to ensure security during a power failure.

12VDC-COMMON		7	16
Auxiliary Output (Open-Collector)		OUT	15
5Amax.(0-20V), 3.2Amax.(20-30V) 30V(42.4Vpeak)max. Contact Output (Class2 Load only)	Common	OUT.C	14
	N/C	OUT.B	13
	N/O	OUT.A	12
Sidelite Presence Sensor		SLS	11
Breakout Detector		BA	10
Sequential Activation		SQ	9
Exterior Activation		62	8
Mode Switch (see Mode SW Usage shown left)		M1	7
		M0	6
REDUCED OPENING SWITCH		H	5
HOLDING BEAM		6B	4
INTERIOR ACTIVATION		61	3
12VDC-(COMMON)		7	2
12VDC+		9DC12V	1
FUNCTION [SLIDING DOOR]		SYMBOL	No.

RELATED DEVICES - 16P

LABEL ON U30 CONTROL

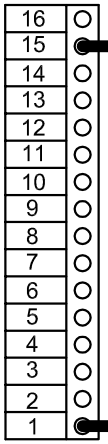

TERMINAL ON U30 CONTROL
P/N 14-11873

NOTES:

1. OTHER WIRES NOT SHOWN FOR SIMPLICITY.
2. USING "BLUE" HANDY TERMINAL, SET AUXILIARY OUTPUT 2 = 5
   RELAY CONTACTS WILL CLOSE IF:
   1. DOOR IS BROKEN OUT <OR>
   2. DOOR IS NOT FULLY CLOSED
3. ENSURE THAT ANY OTHER EXISTING WIRES CONNECTED TO THESE TERINALS REMAIN IN PLACE

ANN-80

80-Character LCD Serial Annunciator

FIRE·LITE ALARMS by Honeywell

Annunciators

General

The ANN-80 annunciator is a compact, backlit, 80-character LCD fire annunciator that mimics the Fire Alarm Control Panel (FACP) display. It provides system status indicators for AC Power, Alarm, Trouble, Supervisory, and Alarm Silenced conditions. The ANN-80 and the FACP communicate over a two-wire serial interface employing the ANN-BUS communication format. Connected devices are powered, via two additional wires, by either the host FACP or a remote UL-listed, filtered power supply. ANN-80 is red; for white, order ANN-80-W.

The ANN-80 displays English-language text of system point information including device type, zone, independent point alarm, trouble or supervisory status, as well as any custom alpha labels programmed into the control panel. It includes control switches for remote control of critical system functions. (A keyswitch prevents unauthorized operation of the control switches.)

Up to eight ANN-80s may be connected to the ANN-Bus of each FACP. No programming is required, which saves time during system commissioning.

52417cov.jpg

Features

- Listed to UL Standard 864, 9th Edition.
- Backlit 80-character LCD display (20 characters x 4 lines).
- Mimics all display information from the host panel.
- Control switches for System Acknowledge, Signal Silence, Drill, and Reset.
- Control switches can be independently enabled or disabled at the FACP.
- Keyswitch enables/disables control switches and mechanically locks annunciator enclosure
- Keyswitch can be enabled or disabled at the FACP.
- Enclosure supervised for tamper.
- System status LEDs for AC Power, Alarm, Trouble, Supervisory, and Alarm Silence.
- Local sounder can be enabled or disabled at the FACP.
- ANN-80 connects to the ANN-BUS terminal on the FACP and requires minimal panel programming.
- Displays device type identifiers, individual point alarm, trouble, supervisory, zone, and custom alpha labels.
- Time-and date display field.
- Aesthetically pleasing design constructed of durable Lexan.
- Surface mount directly to wall or to single, double, or 4" square electrical box.
- Semi-flush mount to single, double, or 4" square electrical box.
- Can be remotely located up to 6,000 feet (1,800 m) from the panel.
- Backlight turns off during AC loss to conserve battery power but will turn back on if an alarm condition occurs.
- May be powered by 24 VDC from the host FACP or by remote power supply (requires 24 VDC).
- Up to eight ANN-80s can be connected on the ANN-BUS.

Controls and Indicators

- AC Power
- Alarm
- Trouble
- Supervisory
- Alarm Silenced

Specifications

- **Operating voltage range:** 18 VDC to 28 VDC
- **Current consumption** @ 24 VDC nominal (filtered and non-resettable): 40 mA maximum.
- **Ambient temperature:** 32°F to 120°F (0°C to 49°C).
- **Relative humidity:** 93% ± 2% RH (noncondensing) at 32°C ± 2°C (90°F ± 3°F).
- 5.375” (13.65 cm.) high x 6.875” (17.46 cm.) wide x 1.375” (3.49 cm.) deep.
- For use indoors in a dry location.
- All connections are power-limited and supervised.

Agency Listings and Approvals

The listings and approvals below apply to the ANN-80. In some cases, certain modules may not be listed by certain approval agencies, or listing may be in process. Consult factory for latest listing status.

- **UL:** S2424
- **FM approved** (ANN-80)
- **CSFM:** 7120-0075:211
- **MEA:** 442-06-E (ANN-80)

The ANN-BUS

POWERING THE DEVICES ON THE ANN-BUS FROM AUXILIARY POWER SUPPLY

The ANN-BUS can be powered by an auxiliary power supply when the maximum number of ANN-BUS devices exceeds the ANN-BUS power requirements. See the FACP manual for more information.

ANN-BUS DEVICE ADDRESSING

Each ANN-BUS device requires a unique address (ID Number) in order to communicate with the FACP. A maximum of 8 devices can be connected to the FACP ANN-BUS communication circuit. See the FACP manual for more information.

WIRE REQUIREMENTS: COMMUNICATIONS CIRCUIT

The ANN-80 connects to the FACP ANN-BUS communications circuit. To determine the type of wire and the maximum wiring distance that can be used with FACP ANN-BUS accessory modules, it is necessary to calculate the total worst case current draw for all modules on a single 4-conductor bus. The total worst case current draw is calculated by adding the individual worst case currents for each module.

NOTE: *For total worst case current draw on a single ANN-BUS refer to appropriate FACP manual.*

After calculating the total worst case current draw, the following table specifies the maximum distance the modules can be located from the FACP on a single wire run. The table ensures 6.0 volts of line drop maximum. In general, the wire length is limited by resistance, but for heavier wire gauges, capacitance is the limiting factor.

These cases are marked in the chart with an asterisk (*). Maximum length can never be more than 6,000 feet (1,800 m), regardless of gauge used. See table below.

WIRE REQUIREMENTS: POWER CIRCUIT

- 14 to 18 AWG (0.75 - 2.08 mm^2) wire for 24 VDC power circuit is acceptable. Power wire distance limitation is set by 1.2 volt maximum line drop form source to end of circuit.
- All connections are power-limited and supervised.
- A maximum of eight ANN-80 modules may be connected to this circuit.

Communication Pair Wiring Distance: FACP to Last ANN-BUS Module

Total Worst Case Current Draw (amps)	22 Gauge	18 Gauge	16 Gauge	14 Gauge
0.100	1,852 ft.	4,688 ft.	* 6,000 ft.	*6,000 ft.
0.200	926 ft.	2,344 ft.	3,731 ft.	5,906 ft.
0.300	617 ft.	1,563 ft.	2,488 ft.	3,937 ft.
0.400	463 ft.	1,172 ft.	1,866 ft.	2,953 ft.
0.500	370 ft.	938 ft.	1,493 ft.	2,362 ft.
0.600	309 ft.	781 ft.	1,244 ft.	1,969 ft.
0.700	265 ft.	670 ft.	1,066 ft.	1,687 ft.
0.800	231 ft.	586 ft.	933 ft.	1,476 ft.
0.900	206 ft.	521 ft.	829 ft.	1,312 ft.
1.000 (max.)	185 ft.	469 ft.	746 ft.	1,181 ft.

WIRING CONFIGURATION

The following figure illustrates the wiring between the FACP and ANN-BUS devices.

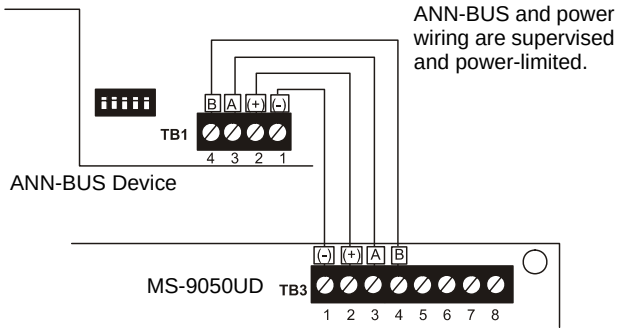

FACP Wiring to ANN-BUS Device

ORDERING OPTIONS:

ANN-80: Red, 80 character LCD Annunciator.

ANN-80-W: White, 80 character LCD Annunciator.

FireLite® Alarms is a registered trademark of Honeywell International Inc.
LEXAN® is a registered trademark of GE Plastics, a subsidiary of General Electric Company.
©2008 by Honeywell International Inc. All rights reserved. Unauthorized use of this document is strictly prohibited.

ISO 9001 CERTIFIED
ENGINEERING & MANUFACTURING QUALITY SYSTEMS

This document is not intended to be used for installation purposes.
We try to keep our product information up-to-date and accurate.
We cannot cover all specific applications or anticipate all requirements.
All specifications are subject to change without notice.

Made in the U.S. A.

For more information, contact Fire•Lite Alarms. Phone: (800) 627-3473, FAX: (877) 699-4105.
www.firelite.com

FIRE·LITE® ALARMS

www.firelite.com

July 8, 2004 DF-52310 • D-050

FCPS-24FS8

24 Volt, 8 Amp Remote Power Supply

Section: Power Supplies/Accessories

GENERAL

The **FCPS-24FS8** is a compact, cost-effective, 8-amp remote power supply with battery charger. The FCPS-24FS8 may be connected to any 12- or 24-volt Fire Alarm Control Panel (FACP) or may stand alone. Primary applications include Notification Appliance (bell) Circuit (NAC) expansion (to support ADA requirements and NAC synchronization) or auxiliary power to support 24-volt system accessories. The FCPS-24FS8 provides *regulated* and *filtered* 24 VDC power to four Notification Appliance Circuits configured as either four Class B (Style Y) or Class A (Style Z, with ZNAC-4 option module). Alternately, the four outputs may be configured as all non-resettable or all resettable or two non-resettable and two resettable. The FCPS-24FS8 also contains a battery charger capable of charging up to 18 Amp Hour batteries.

UL LISTED S2424

FM APPROVED

California State Fire Marshal 7315-0075:206

MEA 219-02-E

FEATURES

- UL Listed NAC Synchronization using System Sensor, Wheelock, or Gentex (Commander Series) appliances.
- Cascadable up to 10 power supplies (four with Gentex) with strobe timing maintained.
- Operates as a sync follower or a sync generator (default). * See note on reverse side.
- Contains two, fully-isolated input/control circuits (triggered from FACP Notification Appliance Circuit [*NAC expander mode*] or jumpered permanently on [*stand-alone mode*]).
- Optional mounting kit, P/N 90286, to internally house addressable SLC control module (CRF-300 or CMF-300) for alarm activation.
- Four Class B (Style Y) or four Class A (Style Z) (with ZNAC-4 Module) Notification Appliance Circuits.
- 8.0 A full load output (3.0 A maximum per circuit) in NAC expander mode (UL 864).
- 6.0 A continuous output in stand-alone mode (UL 1481).
- Compatible with coded inputs; signals passed through.
- Optional power supervision relay (A77-716B).
- In stand-alone mode, output power circuits may be configured as resettable (reset line from FACP required) or non-resettable or a mix of two and two.
- Fully *regulated* and *filtered* power output (optimal for powering four-wire smoke detectors, annunciators and other system peripherals requiring regulated/filtered power).
- Power-limiting technology meets power-limiting requirements.
- Normally-closed trouble contact.
- Fully supervised power supply, battery and Notification Appliance Circuits.
- Selectable earth fault detection.
- AC trouble report selectable for immediate or 8 hour delay.
- Works with virtually any UL 864 fire alarm control which utilizes an industry-standard reverse-polarity notification circuit (including unfiltered and unregulated bell power).
- Requires input trigger voltage of 9.0 - 32 VDC.
- Self-contained in compact, lockable cabinet (15" [38.1 cm] H x 14.5" [36.8 cm] W x 2.75" [7.0 cm] D).
- Includes integral battery charger capable of charging up to 18 AH batteries. Cabinet capable of housing 7.0 AH batteries.
- Battery charger may be disabled via dip switch for applications requiring larger batteries.
- Fixed, clamp-type terminal blocks accommodate up to 12 AWG (3.1 mm²) wire.

Fire•Lite® **Alarms** is a Honeywell company.
This document is not intended to be used for installation purposes. We try to keep our product information up-to-date and accurate. We cannot cover all specific applications or anticipate all requirements. All specifications are subject to change without notice.
For more information, contact **Fire•Lite Alarms**, One Fire-Lite Place, Northford, Connecticut 06472. Phone: (800) 627-3473, Toll-Free FAX: (877) 699-4105.

ISO 9001 CERTIFIED ENGINEERING & MANUFACTURING QUALITY SYSTEMS

STANDARDS and CODES

The FCPS-24FS8 complies with the following standards:

- **NFPA 72** National Fire Alarm Code.
- **UL 864** Standard for Control Units for Fire Alarm Systems *(NAC expander mode).*
- **UL 1481** Power Supplies for Fire Alarm Systems *(stand-alone mode).*

SPECIFICATIONS

Primary (AC) Power

- FCPS-24FS8: 120 VAC 60 Hz, 3.2 A maximum.
- Wire size: minimum 14 AWG (2.0 mm²) with 600V insulation.

Control Input Circuit

- Trigger Input Voltage: 9.0 to 32 VDC.
- Trigger Current: 2.0 mA (16 - 32 V).
  (per input) 1.0 mA (9 - 16 V).

Trouble Contact Rating

- 5.0 A at 24 VDC.

Auxiliary Power Output

- Specific Application Power - 500 mA maximun.

Output Circuits

- +24 VDC filtered, regulated.
- 3.0 A maximum for any one circuit.
- 6.0 A maximum total continuous current for all outputs (Stand-alone mode).
- 8.0 A maximum total short-term current for all outputs (NAC Expander mode).

Secondary Power (Battery) Charging Circuit

- Supports lead-acid batteries only.
- Float Charge Voltage: 27.6VDC.
- Maximum Charge Current: 1.5 A.
- Maximum Battery Capacity: 18 AH.

ORDERING INFORMATION

FCPS-24FS8	Remote charger power supply (120 VAC). Includes main printed circuit board, transformers, red enclosure, and installation instructions.
FCPS-2456RB	Replacement mother board.
PN 90286	FCPS-24FS Module Mounting Kit
ZNAC-4	Class A (Style Z) NAC option module.
A77-716B	12/24 VDC end-of-line relay for monitoring 4-wire smoke detector power.
BAT-1270	Battery, 12 volt, 7.0 AH *(two required).*

APPLICATIONS

Example 1

Expand notification appliance power an additional 8.0 amps. Use up to 4 Class B (Style Y) outputs or 4 Class A (Style Z) using the ZNAC-4.

In this example, the FACP notification appliance circuits will activate the FCPS-24FS8 when reverse polarity activation occurs. Trouble conditions on the FCPS-24FS8 are sensed by the FACP through the Notification Appliance circuit.

Example 2

Use the FCPS-24FS8 to expand auxiliary regulated 24 volt system power up to 6.0 amps. Both non-resettable and resettable power options are available.

Resettable outputs are created by connecting the resettable output from the FACP to one or both of the FCPS-24FS8 inputs.

Example 3

Use addressable control modules to activate the FCPS-24FS8 versus the FACP Notification Appliance Circuits. This typically allows for mounting the FCPS-24FS8 at greater distances* away from the FACP while expanding system architecture in various applications.

In this example, an addressable control module is used to activate the FCPS-24FS8 and an addressable monitor module is used to sense FCPS-24FS8 trouble conditions. Local auxiliary power output from the FCPS-24FS8 provides power to the addressable control module.

*Fire•Lite's MS-9200 (198-point), MS-9200UD, or MS-9600 (636-point) addressable FACPs have the capability of locating control and monitor modules up to 10,000 feet (3048 m)away.

Sync Follower/Generator Note: In some installations, it is necessary to synchronize the flash timing of all strobes in the system for ADA compliance. Strobes accomplish this by monitoring very short timing pulses on the NAC power, which are created by a Fire Alarm Control Panel such as the Fire•Lite MS-9600. When installed at the end of a MS-9600 NAC wire run, this power supply can track (i.e., "follow") the strobe synchronization timing pulses on the existing NAC wire run. This maintains the overall system flash timing of the additional strobes attached to this power supply.

When this power supply is configured (via DIP switch settings) as a "sync follower," this supply's NAC outputs track the strobe synchronization pulses present at this supply's sync input terminal. The pulses are originated from an upstream FACP or other power supply.

When this power supply is configured (via DIP switch settings) as a "sync generator," this supply's sync input terminal are not used. Rather, this power supply is the originator of the strobe synchronization pulses on this power supply's NAC outputs. In "sync generator" mode, the sync type (System Sensor, Wheelock, or Gentex) is selectable via DIP switch settings.

FIRE-LITE® ALARMS

Dual Action BG-12LOB

BG-12LO/-12LOB Manual Pull Station (Listed for Outdoor Applications)

Document 51378 Revision A ECN 00-215 06/16/2000

Description

The BG-12LOB Pull Station is a non-coded manual pull station which provides a Fire Alarm Control Panel (FACP) with a single alarm initiating input signal. The pull station is a dual action model equipped with a key lock reset, an approved outdoor gasket, and an accompanying outdoor backbox. It is UL listed and meets the ADA requirement of a 5-lb. maximum pull down force to activate. Operating instructions are molded into the handle. Molded terminal numbers can also be found adjacent to the wiring terminals.

BG-12LOB

The features of the pull station include Dual-Action operation, Key-Lock Reset function, Screw Terminal Wire connections, outdoor use gasket, a WBB outdoor approved 4-inch backbox, and a sealed switch with gold-plated switch contacts.

Note: The BG-12LOB is applicable with the WP-10 backbox in retrofit applications. To meet UL requirements for outdoor use, the BG-12LO Pull Station must be mounted to the WBB or WP-10 Backbox to create the BG-12LOB model.

Switch Contact Rating

FACP Circuit (Terminals 1 & 2):
Rated to .25 Amp at 30 Volts (AC or DC).

Door Attachment

If the door becomes detached, complete the following steps to reattach the door to the backplate. The door cannot be connected to the pull station if the unit is mounted to a backbox.

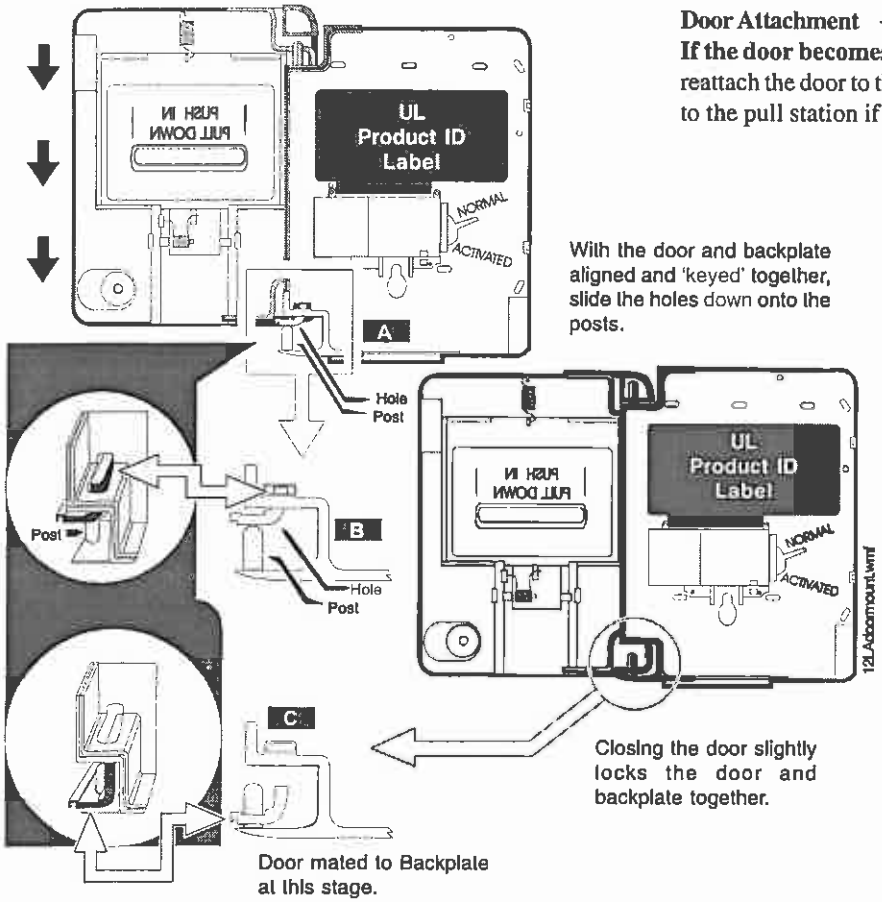

1. Position the door and backplate side by side in the full open position. (i.e. 180-degrees with respect to each other.)
2. With the backplate position fixed, move the door behind the backplate, as shown in the illustration, part A.
3. Align the hinge posts and holes by bringing the door up to meet the backplate, paying particular attention to the 'keying' that occurs when the door's post hole is aligned to the backplate's hinge post. Refer to the illustration, part B.
4. With the two pieces aligned and 'keyed' together, slide the holes down onto the posts. Refer to the illustration, part C.
5. Holding the backplate, close the door slightly to lock the door and backplate together.

Wiring Instructions

1) Surface mount the supplied Outdoor Backbox (WBB) using the side flanges incorporate into the backbox design. The box can be positioned to allow conduit connection from any side. The pull station will mount in any position desired.
2) Before mounting the pull station, pull all necessary wiring through the backbox.
3) Remove the correct amount of wire insulation. The pull station's backplate is molded with a strip gauge to measure the amount of insulation to be removed.
4) Connect the wiring from the fire alarm control panel's Initiating Device Circuit (IDC), or any previous device on the IDC to terminals 1 and 2 located on the pull station's terminal strip. Connect the next device on the IDC or End-of-Line Resistor (ELR) to terminals 1 and 2.

Note: Maintain consistent polarity with all connections throughout the IDC.

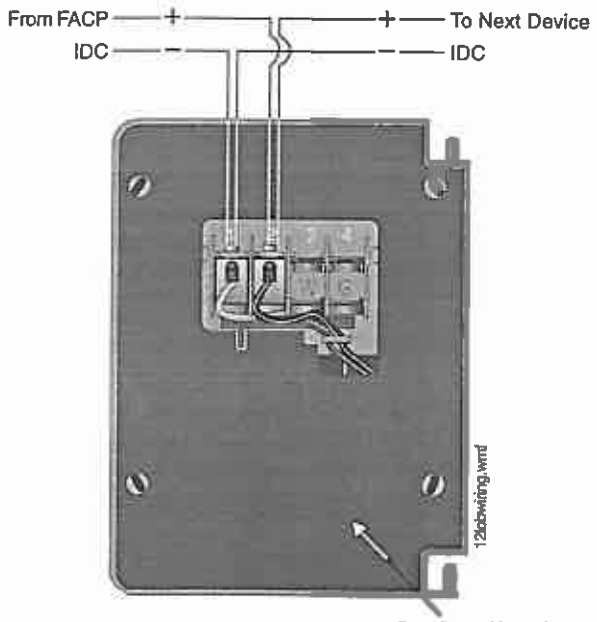

Outdoor-Use Gasket
(Does not cover any user-serviced connections)

Outdoor Stations

Install the BG-12LO with a listed, outdoor-approved backbox (WBB or WP-10) to meet UL requirements for outdoor use. Without one of these backboxes, the BG-12LO is not listed for outdoor applications. Use the four supplied 8-32 x .375" mounting screws to attach the Pull Station to the outdoor-approved backbox.

BG-12LO + WBB = BG-12LOB

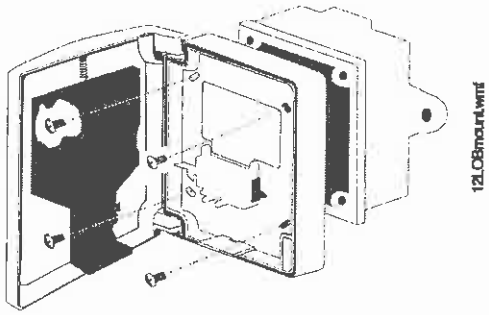

Operation

To activate the dual-action station, first push in the handle, and then pull the handle down. The handle locks into the activated position. The word 'ACTIVATED' appears after the handle is pulled down. The pull station remains in the activated position until reset with the key lock.

1) Reset the BG-12LOB by inserting the key into the lock and turning it ¼ turn (counter-clockwise).
2) Open the door until the handle returns to the 'NORMAL' position.
3) Close and lock the door. Closing the door automatically resets the switch to the 'NORMAL' position. Note: Opening the pull station door will not activate or deactivate the FACP alarm switch.

BG-12LOB Pull Station (Shown Activated)

CAUTION

Install the pull station in accordance with the supplied instructions, applicable NFPA standards, national and local Fire and Electrical codes and the requirements of the Authority Having Jurisdiction (AHJ). Conduct regular testing of the devices using appropriate NFPA standards. Fire•Lite is not responsible for devices that have not been properly installed, tested or maintained. For ADA compliance, if the clear floor space only allows forward approach to an object, the maximum forward reach height allowed is 48 inches (121.92cm). If the clear floor space allows parallel approach by a person in a wheelchair, the maximum side reach height allowed is 54 inches (137.16cm).

CMF and CRF Series

Addressable Control and Relay Modules

FIRE·LITE ALARMS by Honeywell

Addressable Devices

General

CMF-300 Control Module: The CMF-300 Addressable Control Module provides Fire•Lite intelligent control panels a circuit for Notification Appliances (horns, strobes, etc.). Addressability allows the CMF-300 to be activated through panel programming, on a select (zone or area of coverage) basis.

CRF-300 Relay Module: The CRF-300 Addressable Relay Module provides the system with a dry-contact output for activating a variety of auxiliary devices, such as fans, door holders, dampers, control equipment, etc. Addressability allows the dry contact to be activated through panel programming, on a select basis.

LiteSpeed™ is a communication protocol developed by Fire•Lite Engineering that greatly enhances the speed of communication between analog intelligent devices. Intelligent devices communicate in a grouped fashion. If one of the devices within the group has new information, the panel CPU stops the group poll and concentrates on single points. The net effect is response speed greater than five times that of other designs.

Features

- Built-in type identification automatically identifies these devices to the control panel.
- Internal circuitry and relay powered directly by two-wire SLC loop. The CMF-300 module requires power (for horns, strobes, etc.).
- Integral LED “blinks” green each time a communication is received from the control panel and turns on in steady red when activated.
- High noise immunity (EMF/RFI).
- The CMF-300 may be used to switch 24-volt NAC power.
- Wide viewing angle of LED.
- SEMS screws with clamping plates for wiring ease.
- Direct-dial entry of address 01– 159 for MS-9600, 01 – 99 on MS-9200UDLS and MS-9050UD.

Applications

The CMF-300 is used to switch 24 VDC audible/visual power. The CRF-300 may be programmed to operate dry contacts for door holders, Air Handling Unit shutdown, etc., and to reset four-wire smoke detector power.

Construction

- The face plate is made of off-white Noryl®.
- Controls include two rotary switches for direct-dial entry of address (01-159).
- The CMF-300 is configured for a single Class B (Style Y) or Class A (Style Z) Notification Appliance Circuit.
- The CRF-300 provides two Form-C dry contacts that switch together.

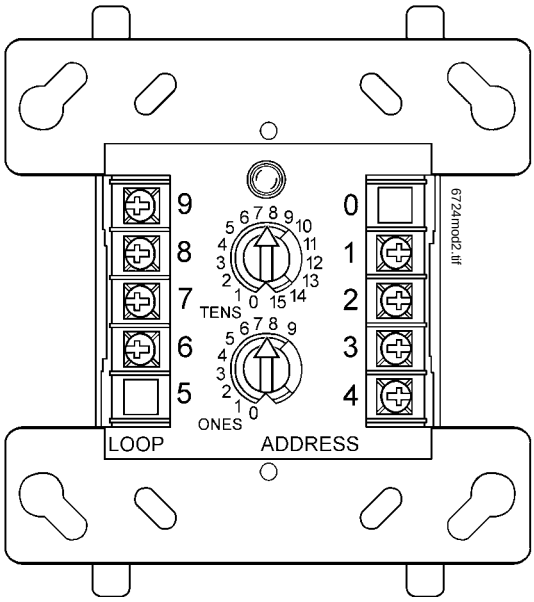

CMF-300 Module
(see wiring diagram Fig. 5 for CRF-300)

Operation

Each CMF-300 or CRF-300 uses one of 159 possible module addresses on a SLC loop. It responds to regular polls from the control panel and reports its type and status, including the open/normal/short status of its Notification Appliance Circuit (NAC). The LED blinks with each poll received. On command, it activates its internal relay. The CMF-300 supervises Class B (Style Y) or Class A (Style Z) notification or control circuits.

NOTE: *Open/short supervision is suspended with the CRF-300.*

Upon code command from the panel, the CMF-300 will disconnect the supervision and connect the external power supply in the proper polarity across the load device. The disconnection of the supervision provides a positive indication to the panel that the control relay actually turned ON. The external power supply is always relay isolated from the communication loop so that a trouble condition on the external power supply will never interfere with the rest of the system.

Rotary switches set a unique address for each module. The address may be set before or after mounting. The built-in TYPE CODE (not settable) will identify the module to the control panel, so as to differentiate between a module and a sensor address.

Specifications for CMF-300

Normal operating voltage: 15 to 32 VDC.

Maximum SLC current draw: 6.5 mA (LED on).

Average operating current: 350 µA direct poll (CLIP mode), 375 µA group poll (LiteSpeed mode) with LED flashing.

External supply voltage (between Terminals T3 and T4): maximum 80 volts (RMS or DC).

Drain on external supply: 2 mA maximum (using internal EOL relay).

EOL resistance: 47K ohms.

Temperature range: 32°F to 120°F (0°C to 49°C).

Humidity range: 10% to 93% non-condensing.

Dimensions: 4.5" (114.3 mm) high x 4" (101.6 mm) wide x 1.25" (31.75 mm) deep. Mounts to a 4" (101.6 mm) square x 2.125" (53.975 mm) deep box.

Specifications for CRF-300

Normal operating voltage: 15 to 32 VDC.

Maximum SLC current draw: 6.5 mA (LED on).

Average operating current: 230 µA direct poll (CLIP mode), 255 µA group poll (LiteSpeed mode) with LED flashing.

EOL resistance: not used.

Temperature range: 32°F to 120°F (0°C to 49°C).

Humidity range: 10% to 93% non-condensing.

Dimensions: 4.5" (114.3 mm) high x 4" (101.6 mm) wide x 1.25" (31.75 mm) deep. Mounts to a 4" (101.6 mm) square x 2.125" (53.975 mm) deep box.

RELAY CONTACT RATINGS

FOR BOTH CMF-300 AND CRF-300 MODELS

Load Description	Application	Maximum Voltage	Current Rating
Resistive	Non-Coded	30 VDC	3.0 A
Resistive	Coded	30 VDC	2.0 A
Resistive	Non-Coded	110 VDC	0.9 A
Resistive	Non-Coded	125 VAC	0.9 A
Inductive (L/R=5ms)	Coded	30 VDC	0.5 A
Inductive (L/R=2ms)	Coded	30 VDC	1.0 A
Inductive (PF=0.35)	Non-Coded	125 VAC	0.5 A

Agency Listings and Approvals

In some cases, certain modules may not be listed by certain approval agencies, or listing may be in process. Consult factory for latest listing status.

- **UL:** S2424
- **ULC:** CS3965
- **FM Approved**
- **CSFM:** 7300-0075:185
- **MEA:** 72-01-E

PRODUCT LINE INFORMATION

CMF-300: Intelligent Addressable Control Module.

CRF-300: Intelligent Addressable Relay Module.

SMB500: Optional Surface-Mount Backbox.

CB500: Control Module Barrier — required by UL for separating power-limited and non-power limited wiring in the same junction box as CMF-300.

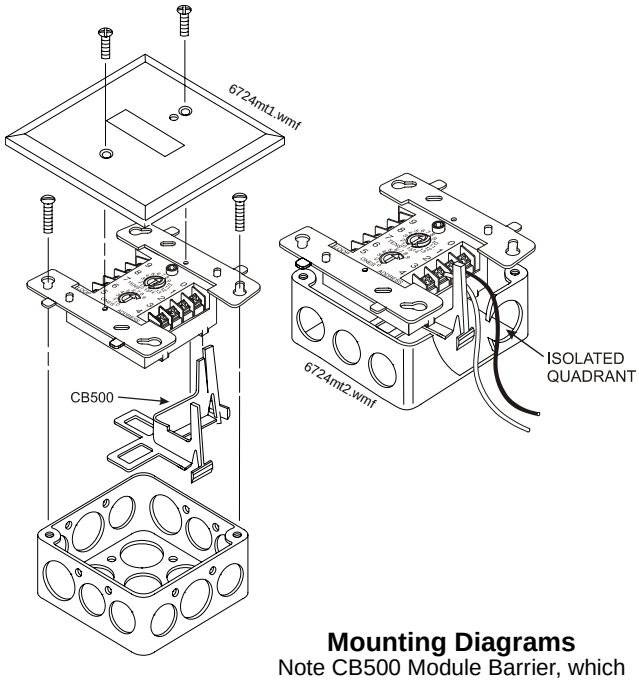

Mounting Diagrams
Note CB500 Module Barrier, which creates isolated quadrant.

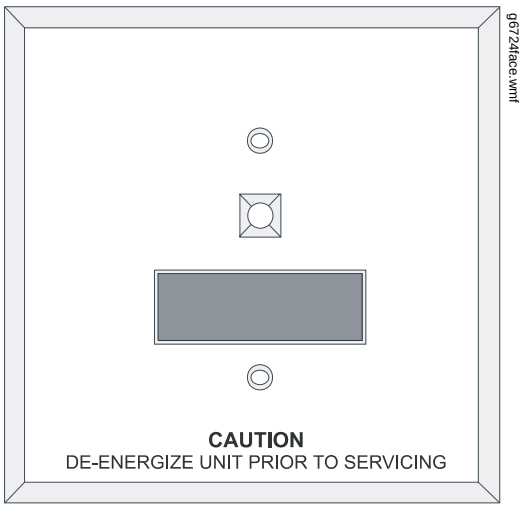

Wiring Diagrams

The following wiring diagrams are provided:

1. CMF-300: Typical notification appliance circuit configuration, NFPA Style Y.
2. CMF-300: Typical fault-tolerant notification appliance circuit configuration, NFPA Style Z.
3. CRF-300: Relay module wiring diagram.

Figure 1 CMF-300 Typical notification appliance circuit configuration, NFPA Style Y.

- Connect modules to Listed compatible Fire•Lite control panels only.
- All wiring shown is supervised and power limited.
- Module polarities are shown in alarm.

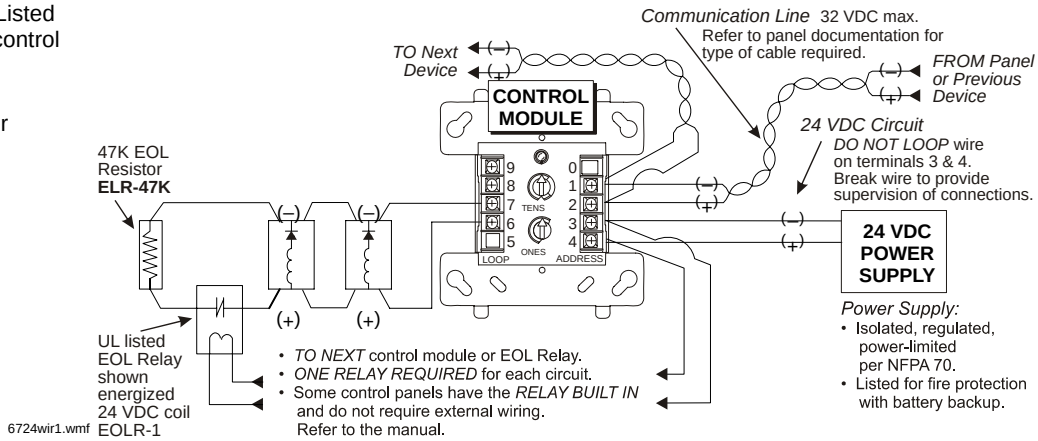

CMF-300 Typical fault-tolerant notification appliance circuit configuration, NFPA Style Z.

- Connect modules to Listed compatible Fire•Lite control panels only.
- All wiring shown is supervised and power limited.
- Module polarities are shown in alarm.

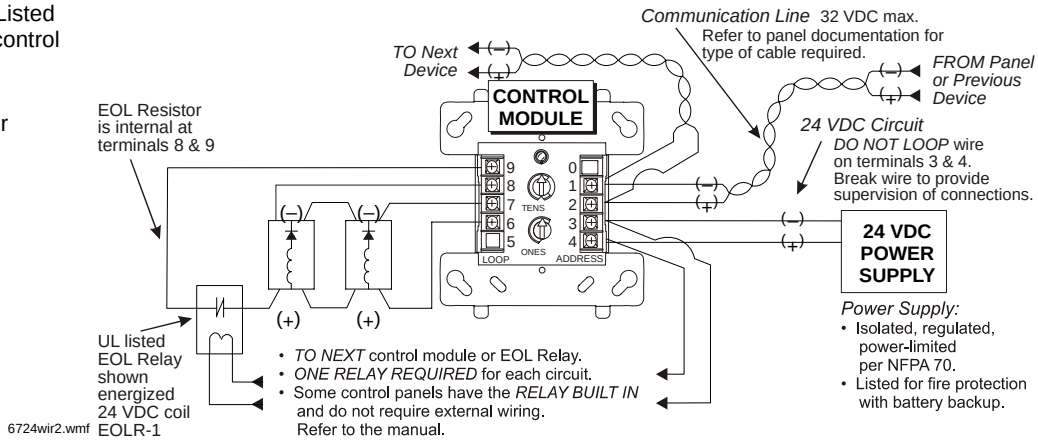

CRF-300 Relay module wiring diagram.

- Connect modules to Listed compatible Fire•Lite control panels only.
- Module does NOT supervise controlled circuits.

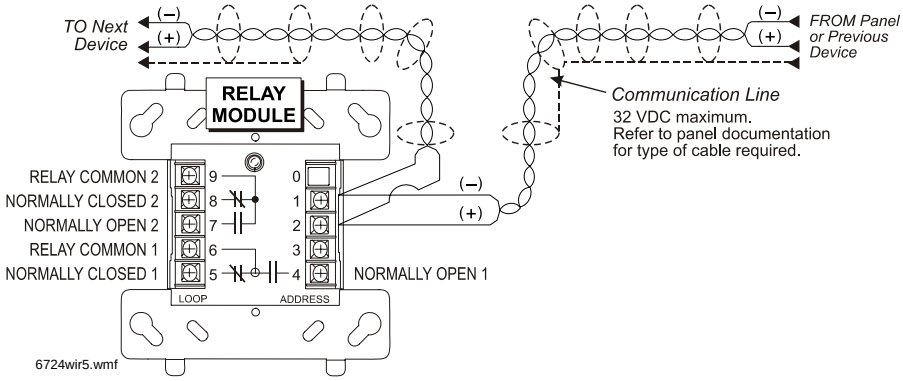

LiteSpeed™ is a registered trademark of Honeywell International Inc. Noryl® is a registered trademark of GE Plastics, a subsidiary of General Electric Company.
©2007 by Honeywell International Inc. All rights reserved. Unauthorized use of this document is strictly prohibited.

ISO 9001 CERTIFIED
ENGINEERING & MANUFACTURING QUALITY SYSTEMS

This document is not intended to be used for installation purposes.
We try to keep our product information up-to-date and accurate.
We cannot cover all specific applications or anticipate all requirements.
All specifications are subject to change without notice.

Made in the U.S. A.

For more information, contact Fire•Lite Alarms. Phone: (800) 627-3473, FAX: (877) 699-4105.
www.firelite.com

DTK-TSS4

39kA/Φ Series Connected Surge Protector
General Product Specifications

DITEK's Total Surge Solution (TSS) is a range of products that provide total surge protection for addressable and conventional alarm systems.

The TSS4 protects 120V system power. The NEMA 4X enclosure makes the TSS4 ideal for harsh environments such as outdoor locations, chemical plants, and water treatment facilities.

DTK-TSS4

Application Features

- NEMA 4 weatherproof enclosure
- Series design for fast response and best protection
- Multi-stage hybrid circuit design
- User replaceable fusing for quick fault recovery
- EMI/RFI filtering included
- Compact design
- Meets government and military specs for fire panel application
- Screw terminal connections with safety covers
- LEDs indicate protection status, ground presence, ground fault indication and fuse status

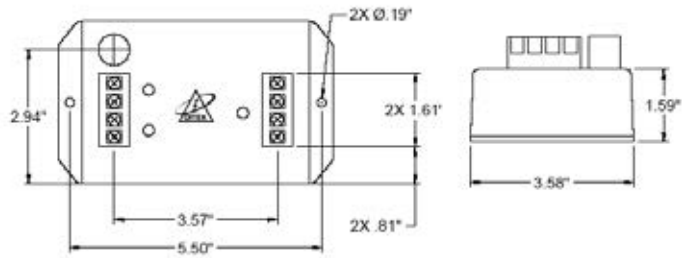

Product Features

- Agency Approvals: Listed by Wyle Labs to UL1449, 2nd Edition criteria
- Service Voltage: 120V
- MCOV: 130VAC
- Maximum Continuous Current: 20A
- EMI/RFI Attenuation
- Protection Modes: L-N, L-G, N-G
- Suppressed Voltage Rating: 500V
- Dimensions: 7" x 4" x 4" (178mm x 102mm x 102mm)
- Weight: 1lb (.45kg)
- Housing: ABS
- Warranty: Ten Year Limited Warranty

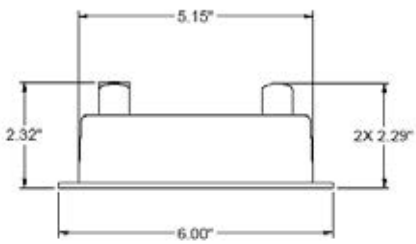

ISO 9001-2000 CERTIFIED Quality Manufacturer

NRTL wyle labs

One DITEK Center
1720 Starkey Road
Largo, FL 33771

1-800-753-2345 Direct 1-727-812-5000
Technical Support: 1-888-472-6100
www.ditekcorp.com

Document: SPS-100007-001 Rev 2 4/06

©2006 DITEK Corp.
Specification Subject to Change

DTK-2MHLP

Voice, Data and Signaling Circuit Modular Surge Protection
General Product Specifications

DITEK's 2MHLP series of signal, data and loop circuit surge protectors provide robust protection in a compact package. Designed for ease of installation, with convenient field-replaceable modules, the **2MHLP** protects two circuit pairs per module. Applications include protection of 4-20mA current loops, alarm panel NAC, SLC and IDC loops, and burglar alarm panels.

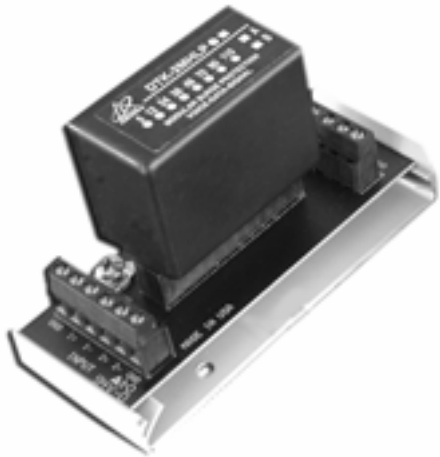

DTK-2MHLP

Application Features

- Multi-stage, SAD technology, hybrid design provides the best possible protection
- Hard-wire mounting base
- Field replaceable, hot swappable, modular edge card connection design
- Seven voltage levels available to protect all types of voice/data applications
- Two pairs protected per module; when used with mounting base (DTK-MB) modules can be ganged to protect up to ten pairs with a common ground

Selection Guide

Example: DTK-2MHLP24BWB

DTK-2MHLP____B____

- **Select Voltage**: 5, 12, 24, 36, 48, 70
WB: 2MHLP with Single Mounting Base
DTK-MB10: Hardwire mounting base
DTK-XB10: Compact hardwire mounting base
- Multiple module mounting bases available separately (DTK-MB, DTK-2MB, DTK-3MB, DTK-4MB, DTK-5MB)
Example: (3) DTK-2MHLP36B + (1) DTK-3MB

Product Features

Agency Approvals: UL497B
Connection Method – Module: Edge card into DTK-MB mounting base **Base**: 12AWG max screw terminals
Max Continuous Current: 5 Amps
Max Surge Current: 20kA
Data Rate: 200kbps (5v) to 2Mbps (130V)
Protection Modes: Line-Ground (All)
Operating Temperature: -40°F - 158°F (-40°C - 70°C)
Dimensions
– **Module**: 1.6"H x 2.1"W x 1.6" x 1.0"D (41mm x 53mm x 25mm)
– **Module with Base**: 1.75"H x 4.5"W x 3.00"D (45mm x 114mm x 76mm)
Weight: .6 oz (18g) without base; 1.2 oz (36g) with base
Housing: ABS
Warranty: Ten Year Limited Warranty

Performance Data

Model DTK-2MHLP	Service Voltage	MCOV	Typical Let Through Voltage
5B	0-5 VDC	5 VDC	6.8 V
12B	10 VDC	12 VDC	15 V
24B	22 VDC	24 VDC	30 V
36B	34 VDC	36 VDC	39 V
48B	44 VDC	48 VDC	56 V
70B	62 VDC	70 VDC	90 V

One DITEK Center
1720 Starkey Road
Largo, FL 33771

1-800-753-2345 Direct: 727-812-5000
Technical Support: 1-888-472-6100
www.ditekcorp.com

Doc. Number: SPS-100010-001 Rev 5 12-06
©2006 DITEK Corp.
Specification Subject to Change

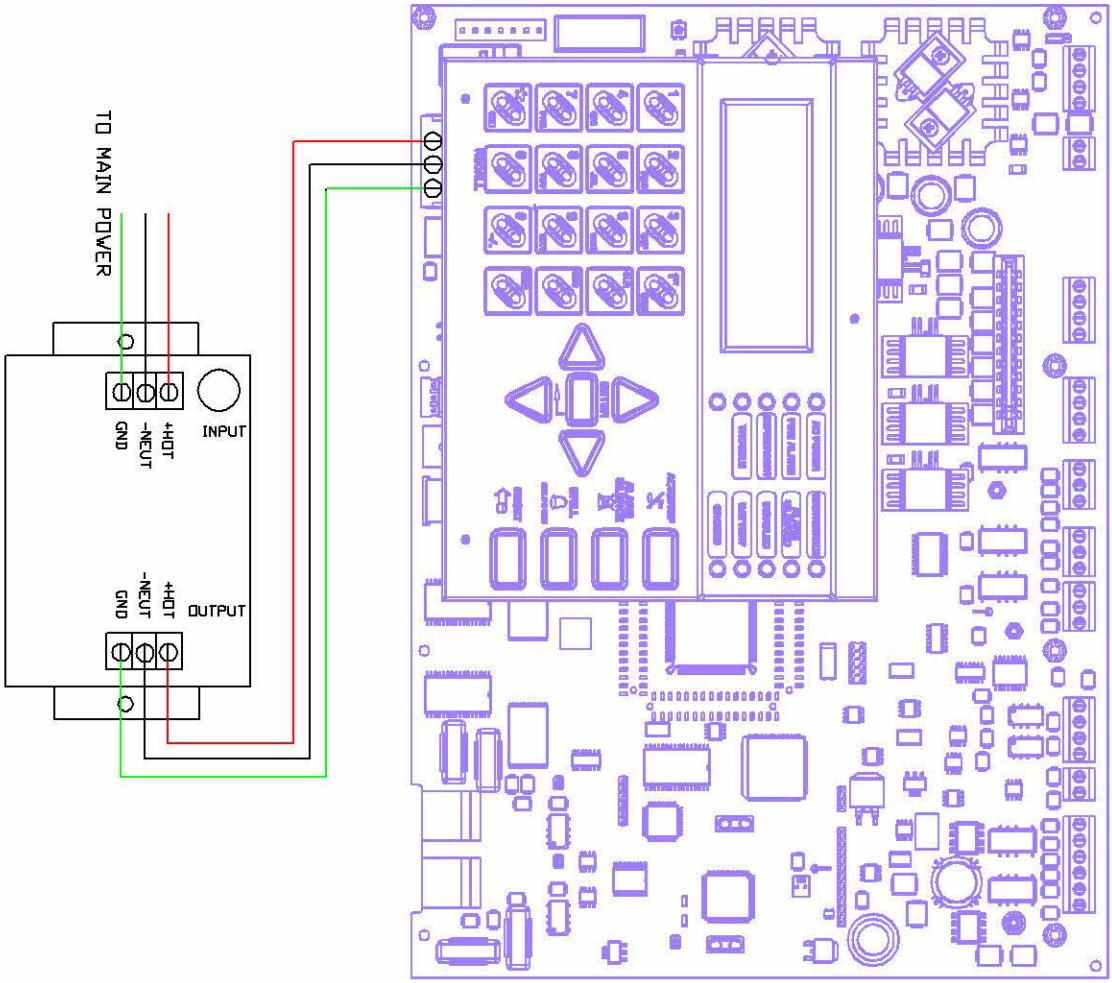
TO MAIN POWER
GND
-NEUT
+HOT
INPUT
GND
-NEUT
+HOT
OUTPUT

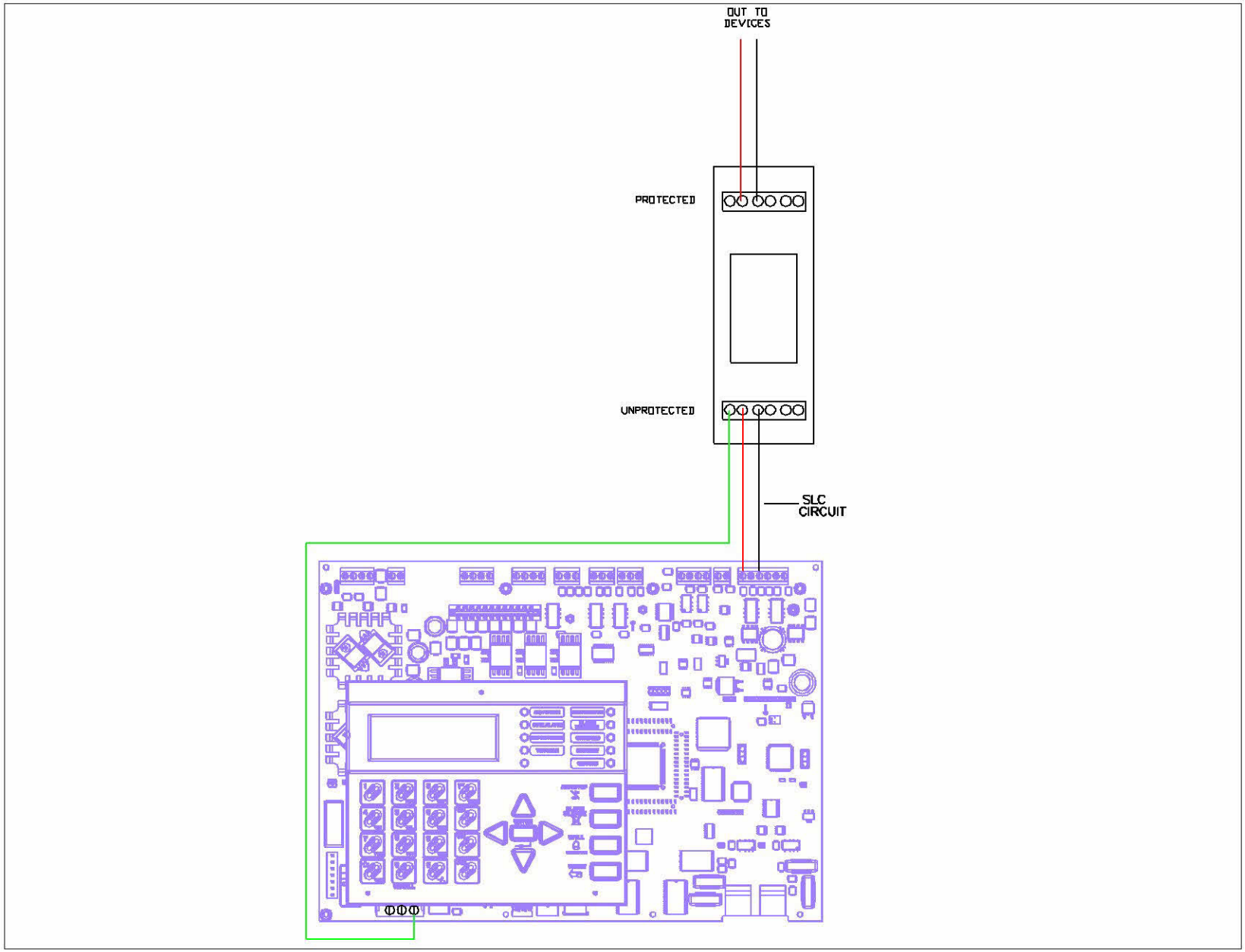
OUT TO
DEVICES
PROTECTED
UNPROTECTED
SLC
CIRCUIT

NO EXCUSES!

DMS

MS Series
Remote Accessories

The MS Series remote accessories are designed to be used with the Duct Smoke Detectors to provide audible and visual indication as well as remote test/reset functions. These devices are constructed of attractive, yet durable brushed stainless steel and mount on a standard single or double gang electrical backbox.

SSU-RA

SSU-RA/P

SSU-RA/R

SSU-RA/P/R

SSU-RA/P/T

SSU-RA/FT/P

SSU-KA/R

SSU-KA/P/R

SSU-KA/P/R/T

SSU-RD

SSU-F/T

SSU-RH/P/A

SSU-RH/KA/P/R

SSU-RH/KA/P/A/T

SSU-RH

MEA

UL LISTED

OFFICE OF STATE FIRE
California State Fire Marshal

Building Control

Space Age Electronics, Inc.
406 Lincoln Street
Marlboro, MA 01752-2195
www.1sae.com
800.486.1723—voice
508.485.0966
508.485.4740—fax

©Space Age Electronics, Inc. 2003

No Excuses Just Solutions!

Wiring

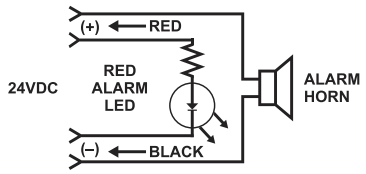

ALARM

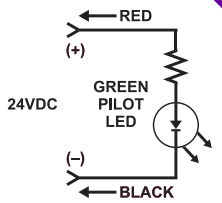

PILOT

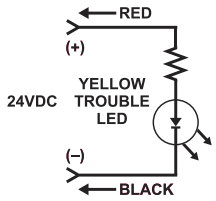

FAULT/TROUBLE

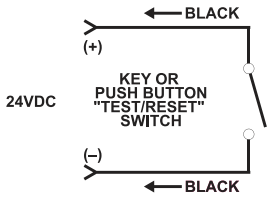

TEST/RESET

> FOR APPROPRIATE DUCT DETECTOR TERMINALS, PLEASE REFER TO DETECTOR INSTALLATION INSTRUCTIONS.

PRODUCT SPECIFICATIONS

SAE PN#	PILOT LED (GREEN)	ALARM LED (RED)	FAULT/ TROUBLE LED (YELLOW)	PUSH BUTTON TEST/ RESET	KEY OPERATED TEST/ RESET	HORN	SINGLE GANG	DOUBLE GANG
SSU-RA		•					•	
SSU-RA/P	•	•					•	
SSU-RA/R		•		•			•	
SSU-RA/P/R	•	•		•			•	
SSU-RA/P/T	•		•				•	
SSU-RA/FT/P	•		•	•			•	
SSU-KA/R		•			•		•	
SSU-KA/P/R	•	•			•		•	
SSU-KA/P/R/T	•		•		•		•	
SSU-RD		•					•	
SSU-F/T			•				•	
SSU-RH/P/A	•	•				•	•	
SSU-RH/KA/P/R	•	•			•	•		•
SSU-RH/KA/P/A/T	•	•	•		•	•		•
SSU-RH						•	•	

POWER REQUIREMENTS:	Alarm LED	15mA @ 24VDC
	Pilot LED	15mA @ 24VDC
	Alarm Horn	20mA @ 24VDC
SOUND PRESSURE:	Alarm Horn	78 db @ 10 ft
DIMENSIONS:	Single Gang	4 1/2"(114.3mm)H x 2 3/4"(69.85mm)W
	Double Gang	4 1/2"(114.3mm)H x 4 1/2"(114.3mm)W
WIRING:	LEDs/Horn	6" 24 AWG pigtails
	Switches	6" 22 AWG pigtails
APPROVALS:	UL Listed for use with Air Products and Controls duct smoke detectors including all RW-Series, SM-Series and SL-Series duct smoke detectors. UL URRQ. S7425 CSFM 7300-1004:107 MEA 73-92-E VOL25	

NOTICE: The information contained in this document is intended only as a summary and is subject to change without notice. The products described have specific instructional/ installation documentation, which covers various technical, approval, code, limitation and liability information. Copies of this documentation along with any general product warning and limitation documents, which also contain important information, are provided with the product and are also available from Space Age Electronics, Inc. The information contained in all of these documents should be considered before specifying or using the products. Any example applications shown are subject to the most current enforced local/national codes, standards, approvals, certifications, and/or the authority having jurisdiction. All of these resources, as well as the specific manufacturer of any shown or mentioned related equipment, should be consulted prior to any implementation. For further information or assistance concerning the products, contact Space Age Electronics, Inc. Space Age Electronics Inc. reserves the right to change any and all documentation without notice.

Building Control

Space Age Electronics, Inc.
406 Lincoln Street
Marlboro, MA 01752-2195
www.1sae.com
800.486.1723—voice
508.485.0966
508.485.4740—fax

Selectable Output Horns, Strobes, and Horn/Strobes

SpectrAlert® Advance selectable-output horns, strobes, and horn/strobes are rich with features guaranteed to cut installation times and maximize profits.

The SpectrAlert Advance series of notification appliances is designed to simplify installations, with features such as plug in designs, instant feedback messages to ensure correct installation of individual devices, and 11 field-selectable candela settings for wall and ceiling strobes and horn/strobes.

When installing Advance products, first attach a universal mounting plate to a four-inch square, four-inch octagon or double-gang junction box. The two-wire mounting plate attaches to a single-gang junction box.

Next, connect the notification appliance circuit wiring to the SEMS terminals on the mounting plate.

Finally, attach the horn, strobe or horn/strobe to the mounting plate by inserting the product's tabs in the mounting plate's grooves. The device will rotate into position, locking the product's pins into the mounting plate's terminals. The device will temporarily hold in place with a catch until it is secured with a captured mounting screw.

The SpectrAlert Advance series includes outdoor notification appliances. Outdoor strobes and horn/strobes (two wire and four wire) are available for wall or ceiling. Outdoor horns are available for wall only. All System Sensor outdoor products are rated between minus 40 degrees Fahrenheit and 151 degrees Fahrenheit in wet or dry applications.

Features

- Electrically compatible with existing SpectrAlert products
- Automatic selection of 12- or 24-volt operation at 15 and 15/75 candela
- Plug-in design
- Field selectable candela settings on wall and ceiling units: 15, 15/75, 30, 75, 95, 110, 115, 135, 150, 177, 185
- Same mounting plate for wall- and ceiling-mount units
- Shorting spring on mounting plate for continuity check before installation
- Tamper resistant construction
- Outdoor wall and ceiling products rated from –40°F to 151°F
- Design allows minimal intrusion into the back box
- Horn rated at 88+ dbA at 16 volts
- Rotary switch for horn tone and three volume selections
- Outdoor products UL listed to UL 1638 (strobe) and UL 464 (horn) outdoor requirements
- Outdoor products rainproof per UL 50 (NEMA 3R)
- Compatible with MDL sync module

Agency Listings

SIGNALING UL LISTED
S4011
S5512
S3593

FM APPROVED
3023572

MEA approved
MEA452-05-E

7125-1653:186 (indoor strobes)
7300-1653:187 (outdoor strobes)
7125-1653:188 (horn/strobes, chime/strobes)
7135-1653:189 (horns, chimes)

SpectrAlert Advance Specifications

Architect/Engineer Specifications

General

SpectrAlert Advance horns, strobes and horn/strobes shall mount to a standard 4 × 4 × 1½-inch back box, 4-inch octagon back box or double-gang back box. Two-wire products shall also mount to a single-gang 2 × 4 × 1⅞-inch back box. A universal mounting plate shall be used for mounting ceiling and wall products. The notification appliance circuit wiring shall terminate at the universal mounting plate. Also, SpectrAlert Advance products, when used with the Sync•Circuit™ Module accessory, shall be powered from a non-coded notification appliance circuit output and shall operate on a nominal 12 or 24 volts. When used with the Sync•Circuit Module, 12-volt rated notification appliance circuit outputs shall operate between nine and 17.5 volts; 24-volt rated notification appliance circuit outputs shall operate between 17 and 33 volts. Indoor SpectrAlert Advance products shall operate between 32 and 120 degrees Fahrenheit from a regulated DC, or full-wave rectified, unfiltered power supply. Strobes and horn/strobes shall have field-selectable candela settings including 15, 15/75, 30, 75, 95, 110, 115, 135, 150, 177, 185.

Strobe

The strobe shall be a System Sensor SpectrAlert Advance Model _____ listed to UL 1971 and shall be approved for fire protective service. The strobe shall be wired as a primary-signaling notification appliance and comply with the Americans with Disabilities Act requirements for visible signaling appliances, flashing at 1Hz over the strobe's entire operating voltage range. The strobe light shall consist of a xenon flash tube and associated lens/reflector system.

Horn/Strobe Combination

The horn/strobe shall be a System Sensor SpectrAlert Advance Model _____ listed to UL 1971 and UL 464 and shall be approved for fire protective service. The horn/strobe shall be wired as a primary-signaling notification appliance and comply with the Americans with Disabilities Act requirements for visible signaling appliances, flashing at 1Hz over the strobe's entire operating voltage range. The strobe light shall consist of a xenon flash tube and associated lens/reflector system. The horn shall have three audibility options and an option to switch between a temporal three-pattern and a non-temporal (continuous) pattern. These options are set by a multiple position switch. On four-wire products, the strobe shall be powered independently of the sounder. The horn on horn/strobe models shall operate on a coded or non-coded power supply.

Outdoor Products

SpectrAlert Advance outdoor horns, strobes and horn/strobes shall be listed for outdoor use by UL and shall operate between minus 40 degrees and 151 degrees Fahrenheit. The products shall be listed for use with a System Sensor outdoor/weatherproof back box with half inch and three-fourths inch conduit entries.

Synchronization Module

The module shall be a System Sensor Sync•Circuit model MDL listed to UL 464 and shall be approved for fire protective service. The module shall synchronize SpectrAlert strobes at 1Hz and horns at temporal three. Also, while operating the strobes, the module shall silence the horns on horn/strobe models over a single pair of wires. The module shall mount to a 4 11/16 × 4 11/16 × 2⅛-inch back box. The module shall also control two Style Y (class B) circuits or one Style Z (class A) circuit. The module shall synchronize multiple zones. Daisy chaining two or more synchronization modules together will synchronize all the zones they control. The module shall not operate on a coded power supply.

Physical/Electrical Specifications	
Standard Operating Temperature	32°F to 120°F (0°C to 49°C)
K Series Operating Temperature	–40°F to 151°F (–40°C to 66°C)
Humidity Range	10 to 93% non-condensing (indoor products)
Strobe Flash Rate	1 flash per second
Nominal Voltage	Regulated 12DC/FWR or regulated 24DC/FWR[1]
Operating Voltage Range[2]	8 to 17.5 V (12V nominal) or 16 to 33 V (24 nominal)
Input terminal wire gauge	12 to 18 AWG
Ceiling mount dimensions (including lens)	6.8″ diameter × 2.5″ high (173 mm diameter × 64 mm high)
Wall mount dimensions (including lens)	5.6″L × 4.7″W × 2.5″D (142 mm L × 119 mm W × 64 mm D)
Horn dimensions	5.6″L × 4.7″W × 1.3″D (142 mm L × 119 mm W × 33 mm D)
Wall-mount back box skirt dimensions (BBS-2, BBSW-2)	5.9″L × 5.0″W × 2.2″D (151 mm L × 128 mm W × 56 mm D)
Ceiling-mount back box skirt dimensions (BBSC-2, BBSCW-2)	7.1″ diameter × 2.25″ high (180 mm diameter × 57 mm high)
Wall-mount weatherproof back box dimensions (SA-WBB)	5.7″L × 5.1″W × 2.0″D (145 mm L × 130 mm W × 51 mm D)
Ceiling-mount weatherproof back box dimensions (SA-WBBC)	7.1″ diameter × 2.0″ high (180 mm diameter × 51 mm high)

Notes:

1. Full Wave Rectified (FWR) voltage is a non-regulated, time varying power source that is used on some power supply and panel outputs.
2. P, S, PC, and SC products will operate at 12 V nominal only for 15 and 15/75 cd.

UL Current Draw Data

UL Max. Strobe Current Draw (mA RMS)

		8–17.5 Volts		16–33 Volts	
	Candela	DC	FWR	DC	FWR
Standard Candela Range	15*	123	128	66	71
	15/75*	142	148	77	81
	30*	NA	NA	94	96
	75*	NA	NA	158	153
	95*	NA	NA	181	176
	110	NA	NA	202	195
	115	NA	NA	210	205
High Candela Range	135	NA	NA	228	207
	150	NA	NA	246	220
	177	NA	NA	281	251
	185	NA	NA	286	258

UL Max. Horn Current Draw (mA RMS)

		8–17.5 Volts		16–33 Volts	
Sound Pattern	dB	DC	FWR	DC	FWR
Temporal	High	57	55	69	75
Temporal	Medium	44	49	58	69
Temporal	Low	38	44	44	48
Non-temporal	High	57	56	69	75
Non-temporal	Medium	42	50	60	69
Non-temporal	Low	41	44	50	50
Coded	High	57	55	69	75
Coded	Medium	44	51	56	69
Coded	Low	40	46	52	50

UL Max. Current Draw (mA RMS), 2-wire Horn/Strobe, Standard Candela Range (15–115 cd)

	8–17.5 Volts		16–33 Volts						
DC Input	15	15/75	15	15/75	30	75	95	110	115
Temporal High	137	147	79	90	107	176	194	212	218
Temporal Medium	132	144	69	80	97	157	182	201	210
Temporal Low	132	143	66	77	93	154	179	198	207
Non-temporal High	141	152	91	100	116	176	201	221	229
Non-temporal Medium	133	145	75	85	102	163	187	207	216
Non-temporal Low	131	144	68	79	96	156	182	201	210
FWR Input									
Temporal High	136	155	88	97	112	168	190	210	218
Temporal Medium	129	152	78	88	103	160	184	202	206
Temporal Low	129	151	76	86	101	160	184	194	201
Non-temporal High	142	161	103	112	126	181	203	221	229
Non-temporal Medium	134	155	85	95	110	166	189	208	216
Non-temporal Low	132	154	80	90	105	161	184	202	211

UL Max. Current Draw (mA RMS), 2-wire Horn/Strobe, High Candela Range (135–185 cd)

	16–33 Volts					16–33 Volts			
DC Input	135	150	177	185	FWR Input	135	150	177	185
Temporal High	245	259	290	297	Temporal High	215	231	258	265
Temporal Medium	235	253	288	297	Temporal Medium	209	224	250	258
Temporal Low	232	251	282	292	Temporal Low	207	221	248	256
Non-temporal High	255	270	303	309	Non-temporal High	233	248	275	281
Non-temporal Medium	242	259	293	299	Non-temporal Medium	219	232	262	267
Non-temporal Low	238	254	291	295	Non-temporal Low	214	229	256	262

Candela Derating

For K series products used at low temperatures, listed candela ratings must be reduced in accordance with this table.

Strobe Output (cd)

Listed Candela	Candela rating at –40°F
15	Do not use below 32°F
15/75	
30	
75	44
95	70
110	110
115	115
135	135
150	150
177	177
185	185

Horn Tones and Sound Output Data

Horn and Horn/Strobe Output (dBA)

			8–17.5 Volts		16–33 Volts		24 Volt Nominal			
							Reverberant		Anechoic	
Switch Position	Sound Pattern	dB	DC	FWR	DC	FWR	DC	FWR	DC	FWR
1	Temporal	High	78	78	84	84	88	88	99	98
2	Temporal	Medium	74	74	80	80	86	86	96	96
3	Temporal	Low	71	73	76	76	83	80	94	89
4	Non-temporal	High	82	82	88	88	93	92	100	100
5	Non-temporal	Medium	78	78	85	85	90	90	98	98
6	Non-temporal	Low	75	75	81	81	88	84	96	92
7†	Coded	High	82	82	88	88	93	92	101	101
8†	Coded	Medium	78	78	85	85	90	90	97	98
9†	Coded	Low	75	75	81	81	88	85	96	92

†Settings 7, 8, and 9 are not available on 2-wire horn/strobe.

SpectrAlert Advance Dimensions

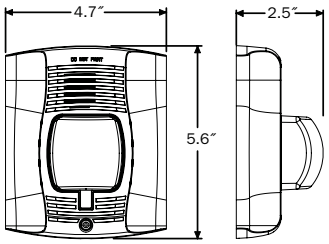

Wall-mount horn/strobes

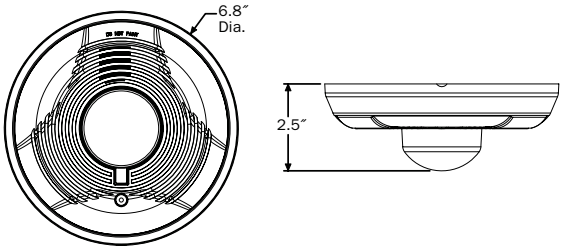

Ceiling-mount horn/strobes

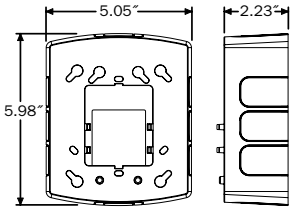

Wall back box skirt

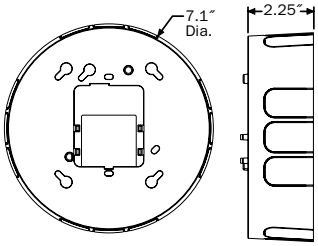

Ceiling back box skirt

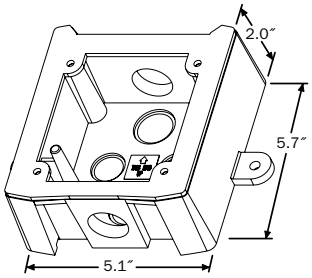

Wall weatherproof back box

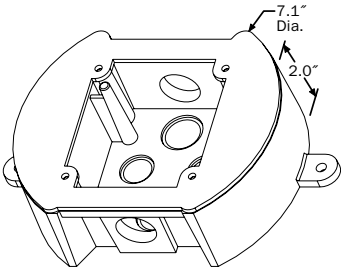

Ceiling weatherproof back box

SpectrAlert Advance Ordering Information

Model	Description
Wall Horn/Strobes	
P2R*†	2-wire Horn/Strobe, Standard cd‡, Red
P2RH*	2-wire Horn/Strobe, High cd, Red
P2RK*	2-wire Horn/Strobe, Standard cd, Red, Outdoor
P2RHK*	2-wire Horn/Strobe, High cd, Red, Outdoor
P2W*	2-wire Horn/Strobe, Standard cd, White
P2WH*	2-wire Horn/Strobe, High cd, White
P4R*	4-wire Horn/Strobe, Standard cd, Red
P4RH*	4-wire Horn/Strobe, High cd, Red
P4RK	4-wire Horn/Strobe, Standard cd, Red, Outdoor
P4RHK	4-wire Horn/Strobe, High cd, Red, Outdoor
P4W*	4-wire Horn/Strobe, Standard cd, White
P4WH*	4-wire Horn/Strobe, High cd, White
Wall Strobes	
SR*†	Strobe, Standard cd, Red
SRH*†	Strobe, High cd, Red
SRK	Strobe, Standard cd, Red, Outdoor
SRHK	Strobe, High cd, Red, Outdoor
SW*	Strobe, Standard cd, White
SWH*	Strobe, High cd, White
Ceiling Horn/Strobes	
PC2R*	2-wire Horn/Strobe, Standard cd, Red
PC2RH*	2-wire Horn/Strobe, High cd, Red
PC2RK	2-wire Horn/Strobe, Standard cd, Red, Outdoor
PC2RHK	2-wire Horn/Strobe, High cd, Red, Outdoor

Model	Description
Ceiling Horn/Strobes (cont'd.)	
PC2W*†	2-wire Horn/Strobe, Standard cd, White
PC2WH*†	2-wire Horn/Strobe, High cd, White
PC4R	4-wire Horn/Strobe, Standard cd, Red
PC4RH	4-wire Horn/Strobe, High cd, Red
PC4RK	4-wire Horn/Strobe, Standard cd, Red, Outdoor
PC4RHK	4-wire Horn/Strobe, High cd, Red, Outdoor
PC4W	4-wire Horn/Strobe, Standard cd, White
PC4WH	4-wire Horn/Strobe, High cd, White
Ceiling Strobes	
SCR*	Strobe, Standard cd, Red
SCRH*	Strobe, High cd, Red
SCRK	Strobe, Standard cd, Red, Outdoor
SCRHK	Strobe, High cd, Red, Outdoor
SCW*†	Strobe, Standard cd, White
SCWH*†	Strobe, High cd, White
Horns	
HR	Horn, Red
HRK	Horn, Red, Outdoor
HW	Horn, White
Accessories	
BBS-2	Back Box Skirt, Wall, Red
BBSW-2	Back Box Skirt, Wall, White
BBSC-2	Back Box Skirt, Ceiling, Red
BBSCW-2	Back Box Skirt, Ceiling, White

Notes:

* Add "-P" to model number for plain housing (no "FIRE" marking on cover), e.g., P2R-P

† Add "-SP" to model number for "FUEGO" marking on cover, e.g., P2R-SP

‡ "Standard cd," refers to strobes that include 15, 15/75, 30, 75, 95, 110, and 115 candela settings. "High cd," refers to strobes that include 135, 150, 177, and 185 candela settings.

All outdoor units ending in "K" include a weatherproof back box.

SYSTEM SENSOR®

3825 Ohio Avenue • St. Charles, IL 60174
Phone: 800-SENSOR2 • Fax: 630-377-6495

©2006 System Sensor.
Product specifications subject to change without notice. Visit systemsensor.com for current product information, including the latest version of this data sheet.

A05-0395-003 • 12/06 • #1676

MS-9200UDLS(E)

Intelligent Addressable FACP with Built-In Communicator

FIRE·LITE ALARMS by Honeywell

Addressable

General

The Fire•Lite MS-9200UDLS is a combination FACP (Fire Alarm Control Panel) and DACT (Digital Alarm Communicator/ Transmitter) all on one circuit board. This compact, cost-effective, intelligent addressable control panel has an extensive list of powerful features.

While the MS-9200UDLS may be used with an SLC configured in the CLIP (Classic Loop Interface Protocol) mode, it can also operate in LiteSpeed™ mode—Fire•Lite's latest polling technology—for a quicker device response time. LiteSpeed's patented technology polls 10 devices at a time. This improvement allows a fully-loaded panel with up to 198 devices to report an incident and activate the notification circuits in under 10 seconds. With Litespeed polling, devices can be wired on standard twisted, unshielded wire up to a distance of 10,000 feet. (Consult the wire table on page 3 for specific installation instructions.)

The MS-9200UDLS's quick-remove chassis protects the electronics during construction. The backbox can be installed allowing field wiring to be pulled. When construction is completed, the electronics can be quickly installed with just two bolts.

Available accessories include LED, graphic and LCD annunciators, and reverse polarity/city box transmitter.

The panel is programmed through the FACP's keypad or via a standard PS-2 computer keyboard, which can be plugged directly into the printed circuit board. This permits easy typing of address labels and other programming information.

NOTE: *Unless otherwise specified, the term MS-9200UDLS is used in this document to refer to both the MS-9200UDLS and the MS-9200UDLS(E) FACPs (Fire Alarm Control Panels).*

Features

- On-board DACT.
- Four Style Y (Class B) or two Class A (Style Z) NAC circuits.
  - 6.0 amps total NAC power with optional XRM-24.
- Selectable strobe synchronization for System Sensor, Wheelock, and Gentex devices.
- Complies with UL 864 9th Edition requirements.
- Remote Acknowledge, Silence, Reset and Drill via addressable monitor modules.
- Up to 32 ACM Series (ACM-16AT or ACM-32 series) annunciators or LCD-80F remote annunciators via EIA-485.
- EIA-232 printer/PC interface (variable baud rate) on main circuit board.
- Integral 80-character LCD display with backlighting.
- Real-time clock/calendar with automatic daylight savings control.
- Detector sensitivity test capability (NFPA 72 compliant).
- History file with 1,000-event capacity.
- Maintenance alert warns when smoke detector dust accumulation is excessive.
- Automatic device type-code verification.
- One person audible or silent walk test with walk-test log and printout.

52422cov

- Point trouble identification.
- Waterflow (nonsilenceable) selection per monitor point.
- System alarm verification selection per detector point.
- PAS (Positive Alarm Sequence) and presignal delay per point (NFPA 72 compliant).

SLC LOOP:

- SLC can be configured for NFPA Style 4, 6, or 7 operation.
- SLC supports up to 198 addressable devices per loop (99 detectors and 99 monitor, control, or relay modules).
- SLC loop maximum length 10,000 ft. (3,000 m.). *See wire table on* page 3.

NOTIFICATION APPLIANCE CIRCUITS (NACS):

- Four onboard NACs with additional NAC capability using output control modules (CMF-300 or CMF-300-6).
- Silence Inhibit and Auto Silence timer options.
- Continuous, March Time, Temporal or California code for main circuit board NACs with two-stage capability.
- Selectable strobe synchronization per NAC.
- 2.5 amps maximum per each NAC circuit.

NOTE: *Maximum or total 24VDC system power shared between all NAC circuits and auxiliary power outputs is 3.6 amps.*

PROGRAMMING AND SOFTWARE:

- Autoprogram (learn mode) reduces installation time.
- Custom English labels (per point) may be manually entered or selected from an internal library file.
- Two programmable Form-C relay outputs.
- 99 software zones.

- Continuous fire protection during online programming at the front panel.
- Program Check automatically catches common errors not linked to any zone or input point.

User interface

LED INDICATORS

- AC POWER (green)
- FIRE ALARM (red)
- SUPERVISORY (yellow)
- ALARM SILENCED (yellow)
- SYSTEM TROUBLE (yellow)
- MAINTENANCE/PRESIGNAL (yellow)
- DISABLED (yellow)
- BATTERY FAULT (yellow)
- GROUND FAULT (yellow)

KEYPAD CONTROLS

- ACKNOWLEDGE/STEP
- ALARM SILENCE
- DRILL
- SYSTEM RESET (lamp test)
- 16-key alpha-numeric pad (similar to telephone keypad)
- 4 cursor keys
- ENTER

Ordering Options

MS-9200UDLS(E): 198-point addressable Fire Alarm Control Panel, one SLC loop. Includes 80-character LCD display, single printed circuit board mounted on chassis, and cabinet.

4XTMF Reverse Polarity Transmitter Module: Provides supervised output for local energy municipal box transmitter, alarm, and trouble.

DP-9692: Optional dress panel for MS-9200UDLS.

TR-CE: Trim Ring for semi-flush mounting.

BB-26: Battery backbox, holds up to two 25 AH batteries and CHG-75.

BB-55F: Battery box, houses two 55 AH batteries.

CHG-75: Battery charger for lead-acid batteries with a rating of 25 to 75 AH.

CHG-120F: Remote battery charging system for lead-acid batteries with a rating of 55 to 120 AH. Requires additional BB-55F for mounting.

BAT Series: Batteries, see data sheet DF-52397.

XRM-24(E): Optional transformer. Increases system power to 6.0 amps. Use XRM-24E with MS-9200UDLS(E).

PRT/PK-CABLE: Cable printer/personal computer interface cable.

PRN-6F: UL listed compatible event printer. Uses tractor-fed paper.

COMPATIBLE ANNUNCIATORS

ACM-8RF: Relay module provides 8 Form-C 5.0 amp relays.

ACS-LED Zone Series: LED-type fire annunciators capable of providing up to 99 software zones of annunciation. Available in increments of 16 or 32 points to meet a variety of applications.

LDM Graphic Series: Lamp Driver Module series for use with custom graphic annunciators.

LCD-80F (Liquid Crystal Display) point annunciator: 80-character, backlit LCD-type fire annunciators capable of displaying English-language text.

NOTE: *For more information on Compatible Annunciators for use with the MS-9200UDLS, see the following data sheets (document numbers) ACM-8RFACM-8R (DF-51555), ACS/ACMSeries (DF-52378), LDM Series (DF-51384), LCD-80F (DF-52185).*

LITESPEED COMPATIBLE ADDRESSABLE DEVICES

All feature a polling LED and rotary switches for addressing.

CP355: Addressable low-profile ionization smoke detector.

SD355: Addressable low-profile photoelectric smoke detector.

SD355T: Addressable low-profile photoelectric smoke detector with thermal sensor.

H355: Fast-response, low-profile heat detector.

H355R: Fast-response, low-profile heat detector with rate-of-rise option.

AD355: Low-profile, intelligent, “Adapt” multi-sensor detector (B350LP base included). *CLIP MODE ONLY*

BEAM355: Intelligent beam smoke detector.

BEAM355S: Intelligent beam smoke detector with integral sensitivity test.

D350PL: Photoelectric low-flow duct smoke detector.

D350RPL: Photoelectric low-flow duct smoke detector with relay option.

MMF-300: Addressable Monitor Module for one zone of normally-open dry-contact initiating devices. Mounts in standard 4.0" (10.16 cm.) box. Includes plastic cover plate and end-of-line resistor. Module may be configured for either a Style B (Class B) or Style D (Class A) IDC.

MDF-300: Dual Monitor Module. Same as MMF-300 except it provides two Style B (Class B) only IDCs.

MMF-301: Miniature version of MMF-300. Excludes LED and Style D option. Connects with wire pigtails. May mount in device backbox.

MMF-302: Similar to MMF-300, but may monitor up to 20 conventional two-wire detectors. Requires resettable 24 VDC power. Consult factory for compatible smoke detectors.

CMF-300: Addressable Control Module for one Style Y/Z (Class B/A) zone of supervised polarized Notification Appliances. Mounts directly to a 4.0" (10.16 cm.) electrical box. Notification Appliance Circuit option requires external 24 VDC to power notification appliances.

CRF-300: Addressable relay module containing two isolated sets of Form-C contacts, which operate as a DPDT switch. Mounts directly to a 4.0" (10.16 cm.) box, surface mount using the SMB500.

BG-12LX: Addressable manual pull station with interface module mounted inside.

I300: This module isolates the SLC loop from short circuit conditions (required for Style 6 or 7 operation).

SMB500: Used to mount all modules except the MMF-301 and M301.

MMF-300-10: Ten-input monitor module. Mount one or two modules in a BB-2F cabinet (optional). Mount up to six modules on a CHS-6 chassis in a BB-6F.

MMF-302-6: Six-zone interface module. Mount one or two modules in a BB-2F cabinet (optional). Mount up to six modules on a CHS-6 chassis in a BB-6F.

CMF-300-6: Six-circuit supervised control module. Mount one or two modules in a BB-2F cabinet (optional). Mount up to six modules on a CHS-6 chassis in a BB-6F.

CRF-300-6: Six Form-C relay control module. Mount one or two modules in a BB-2F cabinet (optional). Mount up to six modules on a CHS-6 chassis in a BB-6F.

NOTE: *1) For more information on Compatible Addressable Devices for use with the MS-9200UDLS, see the following data sheets (document numbers): AD355 (DF-52386), BG-12LX (DF-52013), CMF-300-6 (DF-52365), CRF-300-6 (DF-52374), CMF/CRF Series (DF-52130), CP355 (DF-52383), D350PL/D350RPL (DF-52398), H355 Series (DF-52385), I300 (DF-52389), MMF-300 Series/MDF-300 (DF-52121), MMF-300-10 (DF-52347), MMF-302-6 (DF-52356), SD355/SD355T (DF-52384).*
2) Legacy 300 Series detection devices such as the AD355, CP300/CP350, SD300(T)/SD350(T) and older modules such as the M300, M301, M302, C304, and BG-10LX are ***not compatible*** *with LiteSpeed polling. If the SLC contains one of these devices, polling must be set for standard CLIP protocol. Please consult factory for further information on previous 300 Series devices.*

Wiring Requirements

While shielded wire is not required, it is recommended that all SLC wiring be twisted-pair to minimize the effects of electrical interference. Wire size should be no smaller than 18 AWG (0.78 mm²) and no larger than 12 AWG (3.1 mm²). The wire size depends on the length of the SLC circuit. Use the table below to determine the specific wiring requirements for the SLC.

SLC Protocol	Wire Requirements	Distance in Feet (m)	Wire Size	Wire Type
CLIP	Twisted-pair, shielded	10,000 feet(3,048 m)	12 AWG (3.31 mm^2)	Belden 9583, Genesis 4410, Signal 98230, WPW D999
	Twisted-pair, shielded	8,000 feet (2,438 m)	14 AWG (2.08 mm^2)	Belden 9581, Genesis 4408, Signal 98430, WPW D995
	Twisted-pair, shielded	4,875 feet (1,486 m)	16 AWG (1.31 mm^2)	Belden 9575, Genesis 4406, & 4606, Signal 98630, WPW D991
	Twisted-pair, shielded	3,225 feet (983 m)	18 AWG (0.78 mm^2)	Belden 9574, Genesis 4402 & 4602, Signal 98300, WPW D975
	Untwisted, unshielded wire, in or out of conduit	3,000 feet (914 m)	12 – 18 AWG (3.31 mm^2 – 0.821 mm^2)	

SLC Protocol	Wire Requirements	Distance in Feet (m)	Wire Size	Wire Type
LiteSpeed	Twisted-pair, unshielded	10,000 feet (3,048 m)	12 AWG (3.31 mm^2)	*Non-Plenum (FPLR):* Genesis 4315, Belden 5020UL
				Plenum (FPLP): Genesis 4515, Belden 6020UL
	Twisted-pair, unshielded	8,000 feet (2,438 m)	14 AWG (2.08 mm^2)	*Non-Plenum (FPLR):* Genesis 4313, Belden 5120UL
				Plenum (FPLP): Genesis 4513, Belden 6120UL
	Twisted-pair, unshielded	4,875 feet (1,486 m)	16 AWG (1.31 mm^2)	*Non-Plenum (FPLR):* Genesis 4311, Belden 5220UL
				Plenum (FPLP): Genesis 4511, Belden 6220UL
	Twisted-pair, unshielded	3,225 feet (983 m)	18 AWG (0.821 mm^2)	*Non-Plenum (FPLR):* Genesis 4306, Belden 5320UL
				Plenum (FPLP): Genesis 4506, Belden 6320UL

MS-9200UDLS Wire Requirements

SYSTEM SPECIFICATIONS

System Capacity

- Intelligent Signalling Line Circuits 1
- Addressable device capacity 198
- Programmable software zones 99
- Annunciators 32

Electrical Specifications

AC Power: MS-9200UDLS: 120 VAC, 60 Hz, 3.0 amps. MS-9200UDLSE: 240 VAC, 50 Hz, 1.5 amps. Wire size: minimum 14 AWG (2.00 mm²) with 600 V insulation.

Battery: Two 12 V 18AH lead-acid batteries. Battery charger capacity: 7 – 18 AH. MS-9200UDLS cabinet holds maximum of two 18 AH batteries.

Communication Loop: Supervised and power-limited.

Notification Appliance Circuits: Each terminal block provides connections for two Style Y (Class B) or one Style Z (Class A) for a total of four Style Y (Class B) or two Style Z (Class A) NACs. Maximum signaling current per circuit: 2.5 amps. End-of-Line Resistor: 4.7K ohm, 1/2 watt (P/N 71252 UL listed) for Style Y (Class B) NAC. Refer to panel documentation and *Fire•Lite Device Compatibility Document* for listed compatible devices.

Two Programmable Relays and One Fixed Trouble Relay: Contact rating: 2.0 amps @ 30 VDC (resistive), 0.5 amps @ 30 VAC (resistive). Form-C relays.

Special Application Power (24 VDC Nominal): Jumper selectable (JP4) for conversion to resettable power output. Up to 0.5 amps total DC current available from each output. Power-limited.

Four-Wire Resettable Special Application Smoke Detector Power (24 VDC nominal): Up to 0.5 amps for powering four-wire smoke detectors. Power-limited. Refer to *Fire•Lite Device Compatibility Document* for listed compatible devices.

Remote Sync Output: Remote power supply synchronization output. Nominal special application power: 24 VDC. Maximum current: 40 mA. End-of-Line Resistor: 4.7K ohm. Output linked to NAC 1 control. Supervised and power-limited.

Telephone Interface: Requires dedicated business telephone number with a minimum of 7 volts DC. Obtain dedicated phone line directly from your local phone company. Do not use shared phone lines or PBX (digital) type phone line extensions.

Cabinet Specifications

Door: 19.26" (48.92 cm.) high x 16.82" (42.73 cm.) wide x 0.12" (.30 cm.) deep. **Backbox:** 19.00" (48.26 cm.) high x 16.65" (42.29 cm.) wide x 5.20" (13.34 cm.) deep. **Trim Ring (TR-CE):** 22.00" (55.88 cm.) high x 19.65" (49.91 cm.) wide.

Shipping Specifications

Weight: 26.9 lbs. (12.20 kg.) **Dimensions:** 20.00” (50.80 cm.) high x 22.5” (57.15 cm.) wide x 8.5” (21.59 cm.) deep.

Temperature and Humidity Ranges

This system meets NFPA requirements for operation at 0 – 49°C/32 – 120°F and at a relative humidity 93% ± 2% RH (noncondensing) at 32°C ± 2°C (90°F ± 3°F). However, the useful life of the system's standby batteries and the electronic components may be adversely affected by extreme temperature ranges and humidity. Therefore, it is recommended that this system and its peripherals be installed in an environment with a normal room temperature of 15 – 27°C/60 – 80°F.

NFPA Standards

The MS-9200UDLS complies with the following NFPA 72 Fire Alarm Systems requirements:

- **LOCAL** (Automatic, Manual, Waterflow and Sprinkler Supervisory).
- **AUXILIARY** (Automatic, Manual and Waterflow) (requires 4XTMF).
- **REMOTE STATION** (Automatic, Manual and Waterflow) (Where a DACT is not accepted, the alarm, trouble and supervisory relays may be connected to UL 864 listed transmitters. For reverse polarity signaling of alarm and trouble, 4XTMF is required.)
- **PROPRIETARY** (Automatic, Manual and Waterflow).
- **CENTRAL STATION** (Automatic, Manual and Waterflow, and Sprinkler Supervised).
- **AUTO DETECTOR SELF TEST**

Agency Listings and Approvals

The listings and approvals below apply to the basic MS-9200UDLS control panel. In some cases, certain modules may not be listed by certain approval agencies, or listing may be in process. Consult factory for latest listing status.

- **UL:** S624
- **FM approved**
- **CSFM:** 7165-0075:208
- **MEA:** 120-06-E

LiteSpeed™ is a trademark; and FireLite® Alarms is a registered trademark of Honeywell International Inc. Microsoft® and Windows® are registered trademarks of the Microsoft Corporation.
©2007 by Honeywell International Inc. All rights reserved. Unauthorized use of this document is strictly prohibited.

ISO 9001 CERTIFIED ENGINEERING & MANUFACTURING QUALITY SYSTEMS

This document is not intended to be used for installation purposes.
We try to keep our product information up-to-date and accurate.
We cannot cover all specific applications or anticipate all requirements.
All specifications are subject to change without notice.

Made in the U.S. A.

For more information, contact Fire•Lite Alarms. Phone: (800) 627-3473, FAX: (877) 699-4105.
www.firelite.com

Honeywell

GSM Antennas

GSM-ANT

GSM-ANT3dB

Honeywell offers remote antennas designed to increase GSM signal transmission capability. These durable, low-profile antennas are designed to allow flexible integration with GSM communications devices.

The GSM-ANT Indoor Fixed Length Antenna is designed for indoor use. It comes with 10 feet of RG-174 cable and mounting hardware for ease of installation.

The GSM-ANT3dB Weatherproof Remote Antenna optimizes transmissions with field diversity technology. The versatile, weatherproof design is suitable for indoor and outdoor applications.

SPECIFICATIONS

Electrical

GSM-ANT

- Frequency Range:
  - 824-896 MHz
  - 1850-1990 MHz
- Average Gain: 1dBi
- Maximum power: 10W
- Nominal impedance: 50 ohms
- Pattern: Omni Directional
- Termination: SMA Male
- For Indoor Use Only

GSM-ANT3dB

- Frequency Range:
  - 821-896 MHz
  - 1850-1990 MHz
- Average Gain: 3dBi
- Maximum power: 100W
- Nominal impedance: 50 ohms
- Pattern: Omni Directional
- Termination: N Female
- Operating Temperature: -40° to 185° F (-40º C to 85º C)
- Fully Weatherproof for Outdoor Application

ORDERING

GSM-ANT	Fixed Length Antenna
GSM-ANT3DB	Weatherproof Remote Antenna
GSM3DBKT	Includes **GSM-ANT3DB** antenna and **WA7626-CA SMA** to N adaptor cable
GSM3DB25KT	Includes **GSM-ANT3DB** antenna, **WA7626-CA SMA** to N adaptor cable, 25 foot coax cable
GSM3DB50KT	Includes **GSM-ANT3DB** antenna, **WA7626-CA SMA** to N adaptor cable, 50 foot coax cable

Automation and Control Solutions
Honeywell Security & Communications
2 Corporate Center Dr. Suite 100
P.O. Box 9040
Melville, NY 11747

www.honeywell.com

Honeywell

L/GSMANTDS/D
September 2008
© 2008 Honeywell International Inc.

FIRE·LITE ALARMS

www.firelite.com

July 14, 2004

DF-52385 • E-710

H355 (A) Series

Intelligent Addressable Thermal (Heat) Detectors for MS-9600, MS-9200UD

Section: Addressable Devices

GENERAL

The **Fire•Lite Alarm H355 Series** thermal detectors are addressable sensors that use a state-of-the-art thermistor sensing circuit for fast response. These sensors are designed to provide open-area protection and are intended for use with **Fire•Lite's MS-9600** and **MS-9200UD** Fire Alarm Control Panels (FACPs).

Both the **H355** and **H355R** sensors provide fixed temperature alarm detection at 135°F. The **H355R** sensor responds to rate-of-rise conditions of greater than 15°F/8.3°C per minute. **H355HT** provides fixed high-temperature detection at 190°F/88°C. These thermal detectors provide cost effective, addressable property protection in a variety of applications.

Two LEDs on each sensor light to provide a local, visible sensor indication. Remote LED annunciator capability is available as an optional accessory (P/N **RA400Z**).

UL LISTED S2517

ULC

California State Fire Marshal 7270-0075:195

FM APPROVED

H355 in B350LP base

FEATURES

SLC loop:

- Two-wire SLC loop connection.
- Unit uses base for wiring.

Addressing:

- Addressable by device.
- Direct Decade 01 – 159 (MS-9600), or 01 – 99 (MS-9200UD) entry of address.

Architecture:

- Sleek, low-profile, stylish design.
- State-of-the-art thermistor technology for fast response.
- Integral communications and built-in device-type identification.
- Built-in tamper resistant feature.
- Built-in functional test switch activated by external magnet.

Operation:

- Factory preset at 135°F (57°C).
- Rate-of-rise model (H355R), 15°F (8.3°C) per minute.
- 360°-field viewing angle of the visual alarm indicators (two bicolor LEDs). LEDs blink green in Normal condition and turn on steady red in Alarm.
- Visible LEDs "blink" every time the unit is addressed.

Mechanicals:

- Sealed against back pressure.
- SEMS screws for wiring of the separate base.
- Designed for direct-surface or electrical-box mounting.
- Plugs into separate base for ease of installation and maintenance.
- Separate base allows interchange of photoelectric, ionization and thermal sensors.

Other system features:

- Remote test feature from the panel.
- Walk test with address display.
- Low standby current.
- 94-5V plastic flammability rating.

Options:

- Remote LED output connection to optional RA400Z remote LED annunciator.
- Recessed (**RMK400**) or surface (**SMK400**) base mounting kits.

APPLICATIONS

Use thermal detectors for protection of property.

CONSTRUCTION

These detectors are constructed of off-white Bayblend®.

The H355 Series plug-in intelligent thermal detectors are designed to commercial standards and offer an attractive appearance.

Bayblend® is a registered trademark of Bayer Corporation.

Fire•Lite® Alarms is a Honeywell company.
This document is not intended to be used for installation purposes. We try to keep our product information up-to-date and accurate. We cannot cover all specific applications or anticipate all requirements. All specifications are subject to change without notice.
For more information, contact Fire•Lite Alarms, One Fire-Lite Place, Northford, Connecticut 06472. Phone: (800) 627-3473, Toll-Free FAX: (877) 699-4105.

ISO 9001 CERTIFIED ENGINEERING & MANUFACTURING QUALITY SYSTEMS

INSTALLATION

H355 Series plug-in intelligent thermal detectors use a detachable base to simplify installation, service and maintenance. Installation instructions are shipped with each detector.

Mount base (all base types) on box that is at least 1.5" (3.81 cm) deep. Suitable boxes include:

- 4.0" (10.16 cm) square box.
- 3.5" (8.89 cm) or 4.0" (10.16 cm) octagonal box.
- Single-gang box (except relay or isolator base).

***NOTE:** Because of the inherent supervision provided by the SLC loop, end-of-line resistors are not required. Wiring "T-taps" or branches are permitted for Style 4 (Class "B") wiring only.*

OPERATION

Each H355 Series detector uses one of 159 (MS-9600) or 99 (MS-9200UD) possible addresses on a control panel SLC loop. It responds to regular polls from the control panel and reports its type and the status. If it receives a test command from the panel (or a local magnet test), it stimulates its electronics and reports an alarm. It blinks its LEDs when polled and turns the LEDs on when commanded by the panel. The H355 Series offers features and performance that represent the latest in thermal detector technology.

SPECIFICATIONS

Diameter: 6.1" (15.5 cm) installed in B350LP.

Height: 2.1" (5.33 cm).

Weight: 4.8 oz. (137 g).

Installation temperature: –4°F to 100°F (–20°C to 38°C).

Humidity range: 10% to 93% relative humidity (non-condensing).

Voltage range: 15 to 32 VDC peak.

Standby current: 300 µA @ 24 VDC (one communication every 5 seconds with LED blink enabled).

LED current: 6.5 mA @ 24 VDC.

Mounting: B350LP flanged base, included.

Fixed-temperature setpoint: 135°F (57°C).

Rate-of-rise detection: responds to greater than 15°F/8.3°C per minute.

PRODUCT LINE INFORMATION

***NOTE:** "A" suffix indicates ULC-Listed model.*

H355	Intelligent thermal sensor *(B350LP base included)*.
H355A	Same as H355 but with ULC Listing *(B350LPA base included)*.
H355R	Same as H355 with ***rate-of-rise*** feature *(B350LP base included)*.
H355RA	Same as H355R but with ULC Listing *(B350LPA base included)*.
H355HT	Intelligent ***high-temperature*** thermal detector *(B350LP base included)*.
H355HTA	Same as H355HT but with ULC Listing *(B350LPA base included)*.
RA400Z(A)	Remote LED. Mounts to a single-gang box.
B350LP(A)	Plug-in detector base *(included)*. ***Dimensions:*** 6.1" (15.5 cm). ***Mounting:*** 4.0" (10.16 cm) square box with or without plastic ring, 4.0" (10.16 cm) octagonal box, 3.5" (8.89 cm) octagonal box, or single-gang box. All mounting boxes have a minimum depth of 1.5" (3.81 cm).
M02-04-00	Test magnet.
B224RB(A)	Plug-in System Sensor ***relay*** detector base. ***Diameter:*** 6.2" (15.75 cm). ***Mounting:*** 4.0" (10.16 cm) square box with or without plastic ring, 4.0" (10.16 cm) octagonal box, or 3.5" (8.89 cm) octagonal box. All mounting boxes have a minimum depth of 1.5" (3.81 cm).
B224BI(A):	Intelligent isolator base. Isolates SLC from loop shorts.
B501BH(A)	Plug-in System Sensor ***sounder*** detector base. ***Diameter:*** 6.0" (15.24 cm). ***Mounting:*** 4.0" (10.16 cm) square box with or without plastic ring. Mounting box has a minimum depth of 1.5" (3.81 cm).
B501BHT(A)	Same as B501BH(A), but includes temporal sounder.

Accessories:

RA400Z(A)	Remote LED annunciator. 3 – 32 VDC. Fits U.S. single-gang electrical box. *For use with B501(A) and B350LP(A) bases only.*
SMK400	Surface mounting kit provides for entry of surface wiring conduit. *For use with B501(A) base **only**.*
RMK400	Recessed mounting kit. *For use with B501(A) base **only**.*
M02-04-01	Test magnet.
XR-2	Detector removal tool. Allows installation and/or removal of detector heads from bases in high ceiling applications.
XP-4	Extension pole for XR-2. Comes in three 5-ft. (1.524 m) sections.

TEMP°ALERT®

PROTECT PROPERTY FROM THE ADVERSE EFFECTS OF TEMPERATURE EXTREMES

TA-2HL (PN 1039)

Temperature Monitor

- Monitors -30 to 130° F (-34 to 54° C)
- Adjustable high and low alarm set points
- Requires no power to operate
- Connects to any hardwire or wireless alarm system
- Separate output for high and low alarms signals
- 15' signal cable exits rear of unit for clean appearance
- **Not for use in freezer or cooler monitoring, instead use an EnviroAlert® with a remote probe**

WINLAND
ELECTRONICS, INC.

SPECIFICATIONS

TA-2HL TEMP°ALERT®

SPECIFICATION	VALUE
Low Limit Adjust Range	-30 to 120° F (-34 to 49° C)
High Limit Adjust Range	-20 to 130° F (-29 to 54° C)
Minimum Span (Rec. dist. between high and low set pts.)	10° F (5.6° C)
Temp Accuracy	±3° F (±1.7° C)
Temp Response Time	TC= 14 minutes
Temp Sensing Element	Bimetallic coil
Outputs (Not for high voltage use)	Gold plated N/O Dry Contacts
Contact Output Rating	12VDC @ 50mA
Control Box Material	ABS
Weight	6 ounces (170 g)
Dimensions	6.25″ x 3.75″ x 1″ (15.9 cm x 9.5 cm x 2.5 cm)
Mounting	Key slot

WINLAND ELECTRONICS, INC.

1950 Excel Drive
Mankato, MN 56001

1-800-635-4269
In MN: 507-625-7231
FAX: 507-387-2488

www.winland.com

©2006 Winland Electronics Inc.
D-011-0084 Rev. B

POWER SUPPLIES

Access Systems Power Supplies

The IEI **PowerGard™** Power Supplies are designed and manufactured to meet the demands of access control installations today. Available in cabinet, board level, or plug in configurations, we have the form factor to meet your needs.

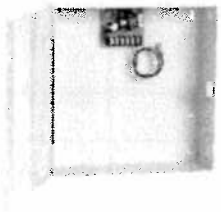

PG 1224-1-C 12 or 24 volt DC, 1.3 amp supply in cabinet – no transformer

PG-1224-3-C 12 or 24 volt DC, 2.5 amp supply in cabinet – no transformer

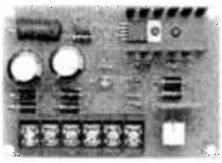

PG 1224-1 12 or 24 volt DC, 1.3 amp supply – board only

PG-1224-3 12 or 24 volt DC, 2.5 amp supply – board only
For your convenience the PG-1224-3 installs onto stand offs in the HubMax™ II cabinet

Tampered Power Supplies

Filtered and regulated 12VDC, 1.2 amp with tamper module to protect against bypass due to circuit shorting. Switchable AC/DC with built in surge suppression for lock hardware, auto resetting poly fuses.

PWR/TMPR12P 12VDC, 1.2 amp supply in cabinet with transformer

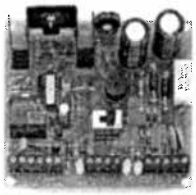

PWR/TMPR12 12VDC, 1.2 amp supply – board only

Plug-In Power Supplies

- Transient Protection
- Auto resetting poly fuses
- Grounded
- LED power indicator

PIP 12VDC	12VDC	1,000, mA
PIP 24VDC	24VDC	1,000 mA
PIP 12VAC	12VAC	40 VA
PIP 16.5VAC	16.5VAC	40 VA
PIP 24VAC	24VAC	40 VA

IEI™ International Electronics Inc.

427 Turnpike Street, Canton, MA 02021 • 1-800-343-9502 • 781-821-5566 • fax: 781-821-4443 • www.ieib.com

ISO 9001:2000 Certified Quality Management System

 Copyright © 2004 International Electronics, Inc.

MMF-300(A) Series/ MDF-300

Addressable Monitor Modules

FIRE·LITE ALARMS by Honeywell

Addressable Devices

General

Four different monitor modules are available for Fire•Lite's intelligent controls to suit a variety of applications. Monitor modules are used to supervise a circuit of dry-contact input devices, such as conventional heat detectors and pull stations, or monitor and power a circuit of two-wire smoke detectors (MMF-302).

MMF-300 is a standard-sized module (typically mounts to a 4" [10.16 cm] square box) that supervises either a Class A (Style D) or Class B (Style B) circuit of dry-contact input devices.

MMF-301 is a miniature monitor module (a mere 1.3" (3.302 cm) H x 2.75" (6.985 cm) W x 0.5" (1.270 cm) D) used to supervise a Class B (Style B) circuit. Its compact design allows the MMF-301 to often be mounted in a single-gang box behind the device it's monitoring.

MMF-302 is a standard-sized module used to monitor and supervise compatible two-wire, 24 volt, smoke detectors on a Class A (Style D) or Class B (Style B) circuit.

MDF-300 is a standard-sized dual monitor module used to monitor and supervise two independent two-wire initiating device circuits (IDCs) at two separate, consecutive addresses in intelligent, two-wire systems.

LiteSpeed™ is a communication protocol developed by Fire•Lite Engineering that greatly enhances the speed of communication between analog intelligent devices. Intelligent devices communicate in a grouped fashion. If one of the devices within the group has new information, the panel CPU stops the group poll and concentrates on single points. The net effect is response speed greater than five times that of other designs.

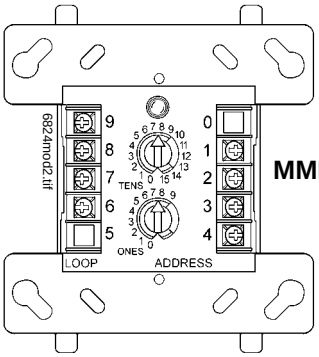

MMF-300 and MMF-302

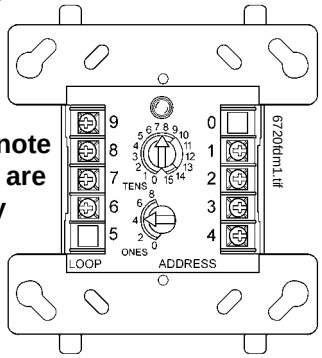

detail of MDF-300 - note "ones" addresses are 0, 2, 4, 6, 8 only

MMF-300 Monitor Module

- Built-in type identification automatically identifies this device as a monitor module to the control panel.
- Powered directly by two-wire SLC loop. No additional power required.
- High noise (EMF/RFI) immunity.
- SEMS screws with clamping plates for ease of wiring.
- Direct-dial entry of address: 01 – 159 on LiteSpeed systems, 01 – 99 on CLIP systems.
- LED flashes green during normal operation (this is a programmable option) and latches on steady red to indicate alarm.

The MMF-300 Monitor Module is intended for use in intelligent, two-wire systems, where the individual address of each module is selected using the built-in rotary switches. It provides either a two-wire or four-wire fault-tolerant Initiating Device Circuit (IDC) for normally-open-contact fire alarm and supervisory devices. The module has a panel-controlled LED indicator. The MMF-300 can be used to replace M300 modules in existing systems.

MMF-300 APPLICATIONS

Use to monitor a zone of four-wire smoke detectors, manual fire alarm pull stations, waterflow devices, or other normally-open dry-contact alarm activation devices. May also be used to monitor normally-open supervisory devices with special supervisory indication at the control panel. Monitored circuit may be wired as an NFPA Style B (Class B) or Style D (Class A) Initiating Device Circuit. A 47K ohm End-of-Line Resistor (provided) terminates the Style B circuit. No resistor is required for supervision of the Style D circuit. Maximum IDC loop length is 2,500 ft./762 m (20 ohms maximum).

MMF-300 OPERATION

Each MMF-300 uses one of 159 available module addresses on an SLC loop. It responds to regular polls from the control panel and reports its type and the status (open/normal/short) of its Initiating Device Circuit (IDC). A flashing LED indicates that the module is in communication with the control panel. The LED latches steady on alarm (subject to current limitations on the loop).

MMF-300 SPECIFICATIONS

Nominal operating voltage: 5 to 32 VDC.

Maximum current draw: 5.1 mA (LED on).

Average operating current: 400 µA (LED flashing).

EOL resistance: 47K ohms.

Temperature range: 32°F to 120°F (0°C to 49°C).

Humidity range: 10% to 93% noncondensing.

Dimensions: 4.5" (11.43 cm) high x 4" (10.16 cm) wide x 1.25" (3.175 cm) deep. Mounts to a 4" (10.16 cm) square x 2.125" (5.398 cm) deep box.

MMF-301 Mini Monitor Module

- Built-in type identification automatically identifies this device as a monitor module to the panel.
- Powered directly by two-wire FACP. No additional power required.

- High noise (EMF/RFI) immunity.
- Tinned, stripped leads for ease of wiring.
- Direct-dial entry of address: 01 – 159 on LiteSpeed systems, 01 – 99 on CLIP systems.

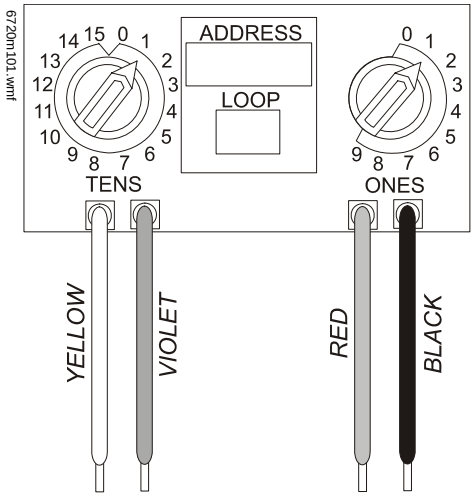

The MMF-301 Mini Monitor Module can be installed in a single-gang junction directly behind the monitored unit. Its small size and light weight allow it to be installed without rigid mounting. The MMF-301 is intended for use in intelligent, two-wire systems where the individual address of each module is selected using rotary switches. It provides a two-wire initiating device circuit for normally-open-contact fire alarm and security devices. The MMF-301 can be used to replace M301 module in existing systems.

MMF-301 APPLICATIONS

Use to monitor a single device or a zone of four-wire smoke detectors, manual fire alarm pull stations, waterflow devices, or other normally-open dry-contact devices. May also be used to monitor normally-open supervisory devices with special supervisory indication at the control panel. Monitored circuit/device is wired as an NFPA Style B (Class B) Initiating Device Circuit. A 47K ohm End-of-Line Resistor (provided) terminates the circuit.

MMF-301 OPERATION

Each MMF-301 uses one of 159 available module addresses on an SLC loop. It responds to regular polls from the control panel and reports its type and the status (open/normal/short) of its Initiating Device Circuit (IDC).

MMF-301 SPECIFICATIONS

Nominal operating voltage: 15 to 32 VDC.

Maximum operating current: 375 µA.

EOL resistance: 47K ohms.

Temperature range: 32°F to 120°F (0°C to 49°C).

Humidity range: 10% to 93% noncondensing.

Dimensions: 1.3" (3.302 cm) high x 2.75" (6.985 cm) wide x 0.5" (1.270 cm) deep.

Wire length: 6" (15.24 cm) minimum.

MMF-302 Interface Module

- Supports compatible two-wire smoke detectors.
- Supervises IDC wiring and connection of external power source.
- High noise (EMF/RFI) immunity.
- SEMS screws with clamping plates for ease of wiring.
- Direct-dial entry of address: 01 – 159 on LiteSpeed systems, 01 – 99 on CLIP systems.
- LED flashes during normal operation (this is a programmable option).
- LED latches steady to indicate alarm on command from control panel.

The MMF-302 Interface Module is intended for use in intelligent, addressable systems, where the individual address of each module is selected using built-in rotary switches. This module allows intelligent panels to interface and monitor two-wire conventional smoke detectors. It transmits the status (normal, open, or alarm) of one full zone of conventional detectors back to the control panel. All two-wire detectors being monitored must be UL compatible with the module. The MMF-302 has a panel-controlled LED indicator and can be used to replace M302 modules in existing systems.

MMF-302 APPLICATIONS

Use the MMF-302 to monitor a zone of two-wire smoke detectors. The monitored circuit may be wired as an NFPA Style B (Class B) or Style D (Class A) Initiating Device Circuit. A 3.9 K ohm End-of-Line Resistor (provided) terminates the end of the Style B or D (class B or A) circuit (maximum IDC loop resistance is 25 ohms). Install ELR across terminals 8 and 9 for Style D application.

MMF-302 OPERATION

Each MMF-302 uses one of 159 available module addresses on an SLC loop. It responds to regular polls from the control panel and reports its type and the status (open/normal/short) of its Initiating Device Circuit (IDC). A flashing LED indicates that the module is in communication with the control panel. The LED latches steady on alarm (subject to current limitations on the loop).

MMF-302 SPECIFICATIONS

Nominal operating voltage: 15 to 32 VDC.

Maximum current draw: 5.1 mA (LED on).

Average operating current: 270 µA (LED flashing).

EOL resistance: 3.9K ohms.

External supply voltage (between Terminals T3 and T4): DC voltage: 18 to 28 volts power limited. Ripple voltage: 0.1 Vrms maximum. Current: 90 mA per module maximum. Requires regulated, resettable 24 VDC power.

Temperature range: 32°F to 120°F (0°C to 49°C).

Humidity range: 10% to 93% noncondensing.

Dimensions: 4.5" (11.43 cm) high x 4" (10.16 cm) wide x 1.25" (3.175 cm) deep. Mounts to a 4" (10.16 cm) square x 2.125" (5.398 cm) deep box.

MDF-300 Dual Monitor Module

The MDF-300 Dual Monitor Module is intended for use in intelligent, two-wire systems. It provides two independent two-wire initiating device circuits (IDCs) at two separate, consecutive addresses. It is capable of monitoring normally open contact fire alarm and supervisory devices; or either normally open or normally closed security devices. The module has a single panel-controlled LED.

NOTE: *The MDF-300 provides two Class B (Style Y) IDC circuits ONLY. Class A (Style Z) IDC circuits are NOT supported in any application.*

MDF-300 SPECIFICATIONS

Normal operating voltage range: 15 to 32 VDC.

Maximum current draw: 5.1 mA (LED on).

Average operating current: 750 µA (LED flashing).

EOL resistance: 47K ohms.

Maximum IDC wiring resistance: 1,500 ohms.

Temperature range: 32° to 120°F (0° to 49°C).

Humidity range: 10% to 93% (non-condensing).

Dimensions: 4.5" (11.43 cm) high x 4" (10.16 cm) wide x 1.25" (3.175 cm) deep. Mounts to a 4" (10.16 cm) square x 2.125" (5.398 cm) deep box.

MDF-300 AUTOMATIC ADDRESSING

The *MDF-300* automatically assigns itself to two addressable points, starting with the original address. For example, if the *MDF-300* is set to address "56", then it will automatically assign itself to addresses "56" and "57".

NOTE: *"ones" addresses on the MDF-300 are 0, 2, 4, 6, or 8 only. Terminals 6 and 7 use the first address, and terminals 8 and 9 use the second address.*

CAUTION: Avoid duplicating addresses on the system.

Installation

MMF-300, MMF-302, and MDF-300 modules mount directly to a standard 4" (10.16 cm) square, 2.125" (5.398 cm) deep, electrical box. They may also be mounted to the SMB500 surface-mount box. Mounting hardware and installation instructions are provided with each module. All wiring must conform to applicable local codes, ordinances, and regulations. These modules are intended for power-limited wiring only.

The MMF-301 module is intended to be wired and mounted without rigid connections inside a standard electrical box. All wiring must conform to applicable local codes, ordinances, and regulations.

Agency Listings and Approvals

In some cases, certain modules may not be listed by certain approval agencies, or listing may be in process. Consult factory for latest listing status.

- **UL:** S2424
- **ULC:** CS3705
- **FM Approved**
- **CSFM:** 7300-0075:185
- **MEA:** 72-01-E

Product Line Information

MMF-300: Monitor module.

MMF-301: Monitor module, miniature.

MMF-302: Monitor module, two-wire detectors

MDF-300: Monitor module, dual, two independent Class B circuits.

SMB500: Optional surface-mount backbox.

Architects'/Engineers' Specifications

Specifications of these and all Fire•Lite products are available from Fire•Lite.

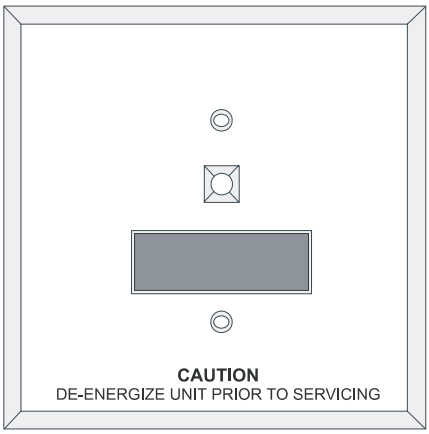

g6724face.wmf

Face plate for MMF-300, MMF-302, and MDF-300

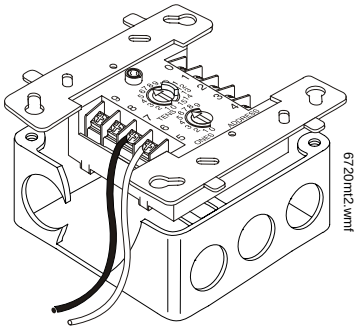

6720mt2.wmf

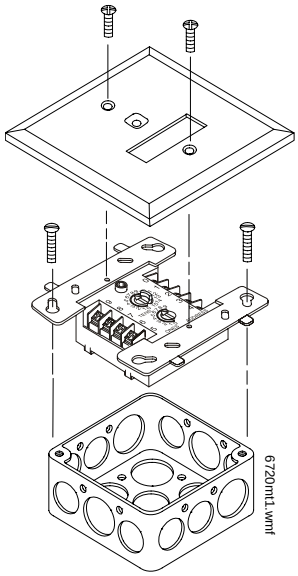

6720mt1.wmf

Mounting Diagrams for standard-sized modules

Wiring Diagrams

The following wiring diagrams are included:

1. **MDF-300:** Typical dual two-wire Style B initiating device circuit configuration.
2. **MMF-301**: Typical two-wire Style B initiating device circuit configuration.
3. **MMF-300:** Typical two-wire initiating circuit configuration, NFPA Style B.
4. **MMF-300:** Typical four-wire fault-tolerant initiating circuit configuration, NFPA Style D.
5. **MMF-300:** Typical two-wire initiating circuit configuration for security systems (with alarm versus short capability).
6. **MMF-302:** Interface two-wire conventional detectors, NFPA Style B.
7. **MMF-302:** Interface two-wire conventional detectors, NFPA Style D.
8. **CRF-300:** Relay control module used to disconnect a power supply.

Figure 1 MDF-300

Typical dual two-wire Style B initiating device circuit configuration.

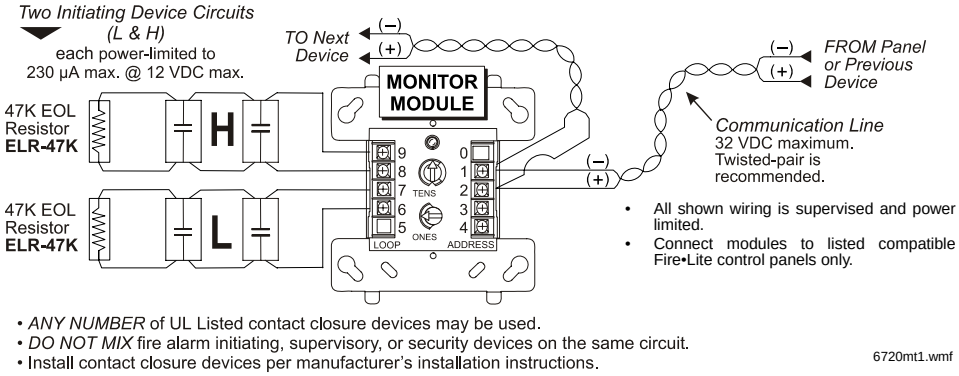

Figure 2 MMF-301

Typical two-wire Style B initiating device circuit configuration.

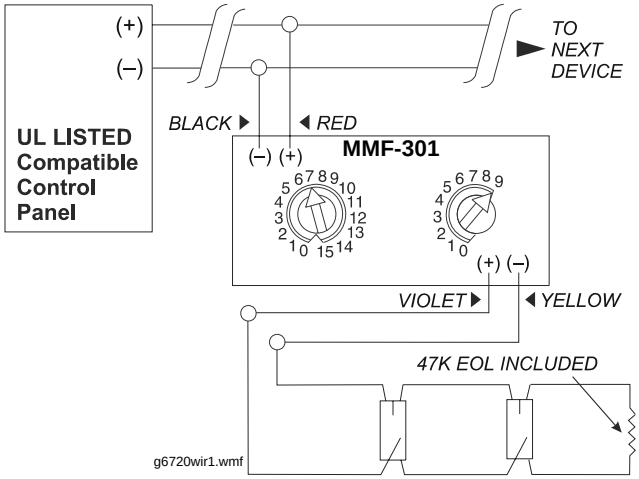

NOTE: Wiring Diagrams this Page: MMF-300

- Connect modules to listed compatible Fire•Lite control panels only.
- All wiring shown is supervised and power limited.
- Install contact closure devices per manufacturers' installation instructions.
- Any number of UL-listed contact closure devices may be used.
- DO NOT MIX fire alarm initiating, supervisory, or security devices on the same circuit.

Figure 3 MMF-300

Typical two-wire initiating circuit configuration, NFPA Style B.

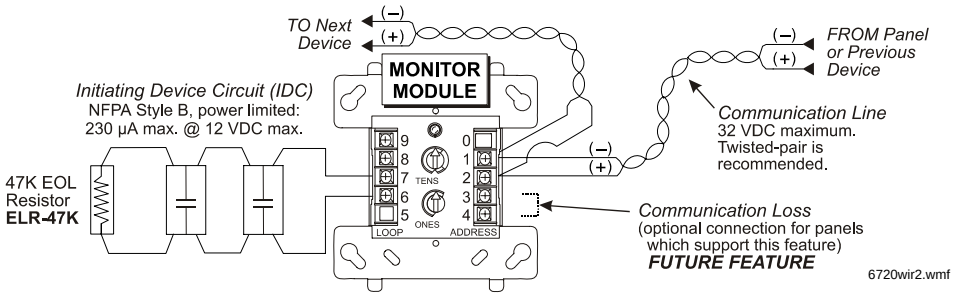

Figure 4 MMF-300

Typical four-wire fault-tolerant initiating circuit configuration, NFPA Style D.

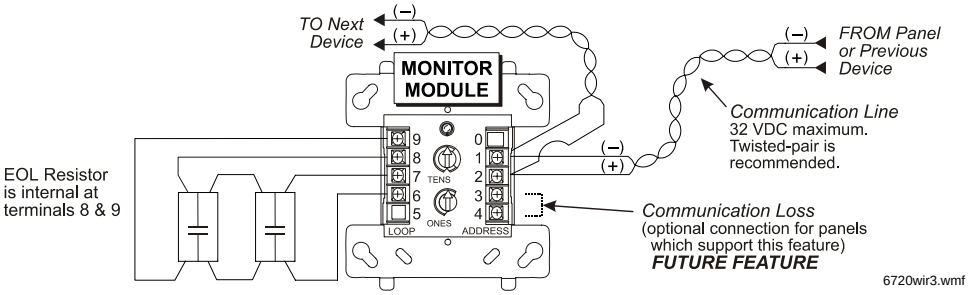

Figure 5 MMF-300

Typical two-wire initiating circuit configuration for security systems (with alarm versus short capability).

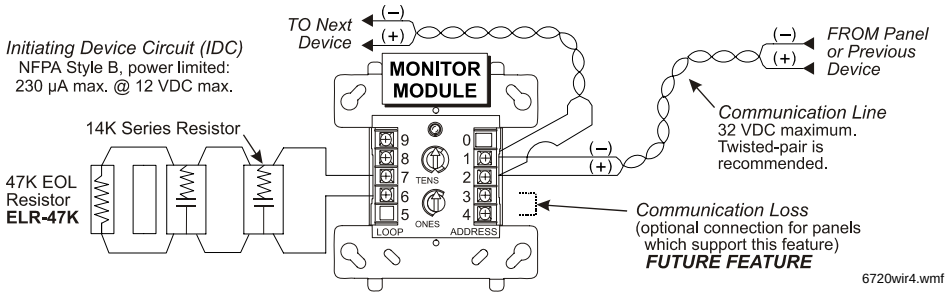

NOTE: Wiring Diagrams this Page: MMF-302 and CRF-300

- Connect modules to listed compatible Fire•Lite control panels only.
- Terminal wiring must be power limited.
- DO NOT MIX fire alarm initiating, supervisory, or security devices on the same circuit.
- DO NOT LOOP wire under terminals. Break wire run to provide supervision of connections.
- Detectors must be UL listed compatible with module.
- Install detectors per manufacturers' installation instructions.
- Power to the interface module must be externally switched to reset the detectors. An CRF-300 relay control module can be used to switch power from a standard power supply; see Fig. 7 below.

Figure 6 MMF-302

Interface two-wire conventional detectors, NFPA Style B.

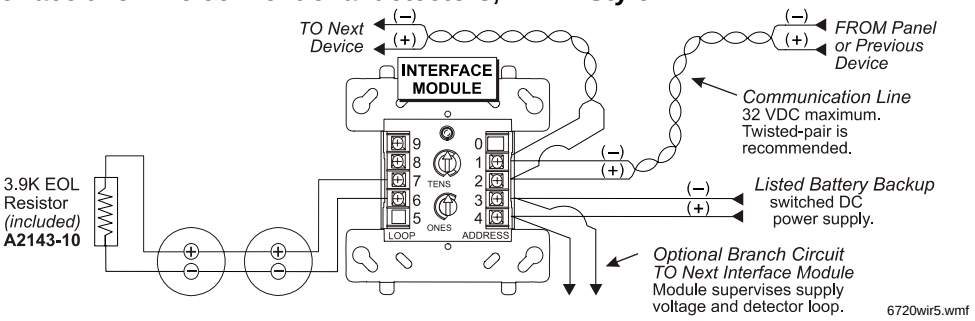

Figure 7 MMF-302

Interface two-wire conventional detectors, NFPA Style D.

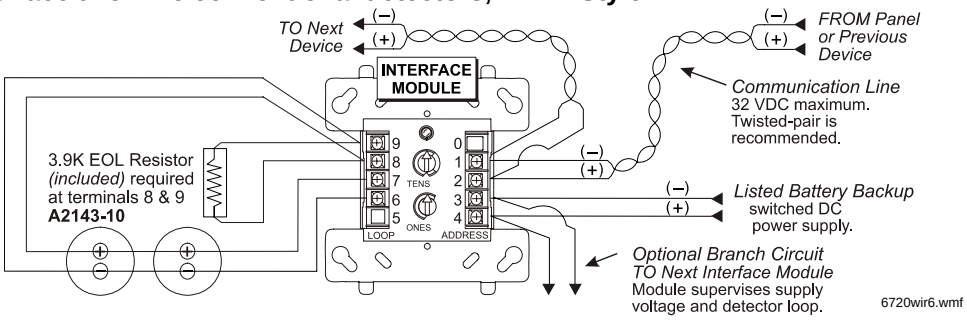

Figure 8 CRF-300

Relay control module used to disconnect a power supply.

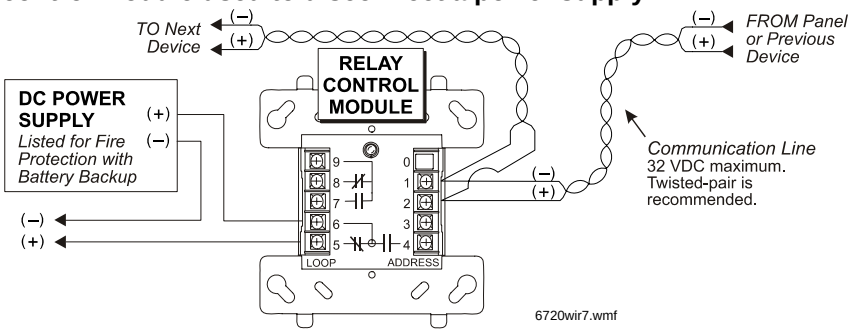

LiteSpeed™ is a registered trademark of Honeywell International Inc.
©2007 by Honeywell International Inc. All rights reserved. Unauthorized use of this document is strictly prohibited.

ISO 9001 CERTIFIED
ENGINEERING & MANUFACTURING QUALITY SYSTEMS

This document is not intended to be used for installation purposes.
We try to keep our product information up-to-date and accurate.
We cannot cover all specific applications or anticipate all requirements.
All specifications are subject to change without notice.

Made in the U.S. A.

For more information, contact Fire•Lite Alarms. Phone: (800) 627-3473, FAX: (877) 699-4105.
www.firelite.com

FIRE-LITE® ALARMS

www.firelite.com

MR Series
Control Relays

Section: Miscellaneous

GENERAL

The Air Products & Controls **MR Series Multivoltage Control Relays** offer SPDT or DPDT 10-amp contacts which may be operated by one of four input control voltages. A single relay may be energized from a voltage source of 24 VDC, 24 VAC, 115 VAC, or 230 VAC by wiring to appropriate input terminals.

Each relay contains a red light-emitting diode (LED) which indicates the relay coil is energized. Relays may be "snapped apart" from a standard four-module assembly and used independently.

These devices are ideal for applications where local contacts are required for system status, remote contacts for control of electrical loads and general purpose switching. They are suitable for use with HVAC, Temperature Control, Fire Alarm, Security, Energy Management, and Lighting Control Systems.

The Air Products & Controls **MR-199 Heavy Duty Power Relays** are designed for control applications where 30-amp DPDT contacts are required. The 24 VDC and 120 VAC relays are mounted in a rugged steel enclosure.

UL LISTED
S3403
(MR-101/CR, MR-104/CR, MR-201/CR, MR-204/CR)

ULC
CS118/ CS733
(MR-104 and MR-204 Series *ONLY*)

MEA
73-92-E (MR-101/C or CR, MR-104/C or CR)
73-92-E, Vol. III (MR-201/C or CR, MR-204/C or CR)

California State Fire
7300-1004:101
(MR-101/CR, MR-104/CR, MR-201/CR, MR-204/CR)

MR SERIES FEATURES (Excluding MR-199 Series)

- Each relay position may be energized from one of four input control voltages.
- Each relay position contains a red LED which illuminates when the coil is energized. This provides a timesaving convenience when checking an installed system, no metering is required.
- Single, dual, or triple relay modules may be "snapped apart" from a standard four-position master.
- SPDT or DPDT relays available.
- Available in dust-proof metal enclosures (with gray plastic cover on MR-101/CR and MR-201/CR) with LED viewing port.
- Red enclosure available on some models.
- Track mounting hardware to facilitate installation in standard cabinets.
- UL recognized relays rated at 10,000,000 mechanical operations.

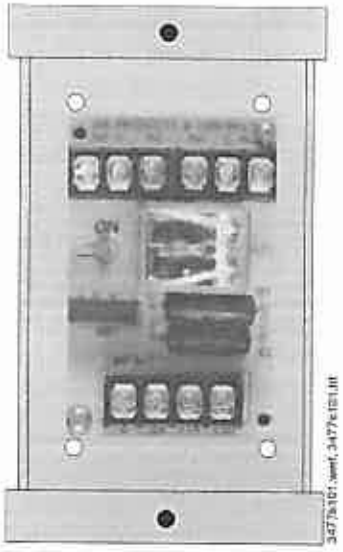

The MR-101/CR

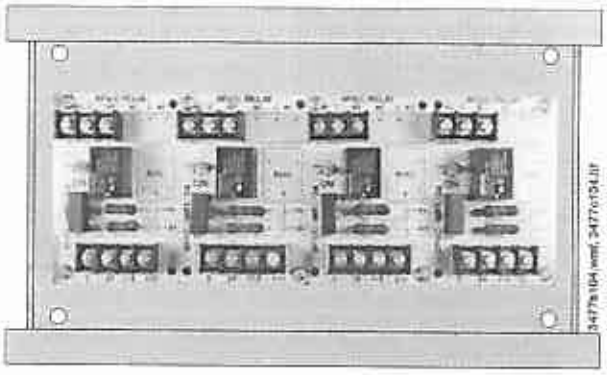

The MR-104/CR

Fire•Lite® Alarms is a Honeywell company.
This document is not intended to be used for installation purposes. We try to keep our product information up-to-date and accurate. We cannot cover all specific applications or anticipate all requirements. All specifications are subject to change without notice.
For more information, contact Fire•Lite Alarms, One Fire-Lite Place, Northford, Connecticut 06472. Phone: (800) 627-3473, Toll-Free FAX: (877) 699-4105.

ISO 9001 CERTIFIED ENGINEERING & MANUFACTURING QUALITY SYSTEMS

PRODUCT SPECIFICATIONS FOR MULTIVOLTAGE CONTROL RELAYS

Power requirements:

MR-101 Position is rated at 0.015 amps (15 milliamps) @ 24 VAC, 24 VDC, 115 VAC, 230 VAC.

MR-201 Position is rated at 0.035 amps (35 milliamps) @ 24 VAC, 24 VDC, 115 VAC, 230 VAC.

Relays: All relays are UL ***recognized*** components. ***NOTE:*** *Only models with enclosures ("C" suffix) are UL **listed** assemblies (excludes MR-199X-13C and MR-199X-14C).*

Enclosure: 18 gauge CRS, plated with 1/2" conduit knockouts (top and bottom). The ***MR-101/CR and MR-201/CR*** include a metal backbox with durable plastic cover.

Contact rating: 10.0 A @ 115 VAC resistive.

Ambient temperature: -50°C to +85°C (-50°F to +185°F).

Dimensions:

MR-101/T and MR-201/T are 3.0" (82 mm) H x 2.125" (54 mm) W x 1.5" (38.1 mm) D.

MR-104/T and MR-204/T are 3.0" (82 mm) H x 8.5" (215 mm) W x 1.5" (38.1 mm) D.

MR-101/CR and MR-201/CR are 6.125" (130.2 mm) H x 3.25" (82 mm) W x 2.5" (63.5 mm) D.

MR-104/CR and MR-204/CR are 6.125" (130.2 mm) H x 9.5" (241.3 mm) W x 2.5" (63.5 mm) D.

PRODUCT SPECIFICATIONS FOR HEAVY-DUTY POWER RELAYS

Contact arrangement: DPDT standard.

Contact rating: 30 Amps @ 240 VAC; 20 Amps @ 277 VAC; 2 HP @ 250 VAC.

Coil power: ***MR-199X-13*** is rated at 24 VDC @ 85 mA. ***MR-199X-14*** is rated at 120 VAC @ 85 mA.

Temperature range: -30°C to +50°C (-22°F to +122°F). ***For MR-199X-13:*** -55°C to +80°C (-67°F to +176°F). ***For MR-199X-14:*** -55°C to +45°C (-67°F to +113°F).

Dimensions: ***MR-199X-13 and MR-199X-14*** is 3.13" (79.4 mm) high x 2.5" (63.5 mm) wide x 2.31" (58.7 mm) deep. ***MR-199X-13C and MR-199X-14C*** is 5.31" (134.9 mm) high x 3.38" (85.9 mm) wide x 3.13" (96.8 mm) deep.

PRODUCT LINE INFORMATION

Model	*Description*
MR-101/T	Single SPDT Relay with LED and track-mounting hardware (UL recognized).
MR-101/CR	Single SPDT Relay with LED, mounted in metal backbox with ***red*** plastic cover (UL listed).
MR-104/T	Four-Position SPDT Relay with LEDs and track-mounting hardware (UL recognized).
MR-104/CR	Four-Position SPDT Relay with LEDs, mounted in a metal backbox with a ***red*** cover (UL listed).
MR-201/T	Single DPDT Relay with LED and track-mounting hardware (UL recognized).
MR-201/CR	Single DPDT Relay with LED, mounted in metal backbox with ***red*** plastic cover (UL listed).
MR-204/T	Four-Position DPDT Relay with LEDs and track-mounting hardware (UL recognized).
MR-204/CR	Four-Position DPDT Relay with LEDs, mounted in a metal enclosure with red cover (UL listed).
MR-199X-13	Heavy-duty DPDT Relay only, 24 VDC coil input (UL recognized).
MR-199X-13C	Heavy-duty DPDT Relay, 24 VDC coil input, mounted in enclosure (UL recognized).
MR-199X-14	Heavy-duty DPDT Relay only, 120 VAC coil input (UL recognized).
MR-199X-14C	Heavy-duty DPDT Relay, 120 VAC coil input, mounted in enclosure (UL recognized).

MR SERIES RELAYS

MODEL NUMBER	COIL VOLTAGE				CONTACTS			MOUNTING			LISTINGS	
	24 VDC	24 VAC	120 VAC	230 VAC	SPDT (10A)	DPDT (10A)	DPDT (30A)	Track	Spacer	Enclosure	UL, CSFM, & MEA	ULC
MR-101/T	X	X	X	X	1			X				
MR-101/CR	X	X	X	X	1					X	X	
MR-104/T	X	X	X	X	4			X				X
MR-104/CR	X	X	X	X	4					X	X	X
MR-201/T	X	X	X	X		1		X				
MR-201/CR	X	X	X	X		1				X	X	
MR-204/T	X	X	X	X		4		X				X
MR-204/CR	X	X	X	X		4				X	X	X
MR-199X-13	X						1		X			
MR-199X-13C	X						1			X		
MR-199X-14			X				1					
MR-199X-14C			X				1			X		

FIRE·LITE® ALARMS

www.firelite.com

July 14, 2004

DF-52013 • E-500

BG-12LX

Addressable Manual Pull Station

Section: Addressable Devices

Patented, U.S. Patent No. D428,351; 6,380,846
U.S. Patent Pending: 09/686,286

C UL US LISTED

California State Fire Marshal 7150-0075:184

FM APPROVED

MEA 67-02-E

GENERAL

The **Fire•Lite Alarms BG-12LX** is a state-of-the-art, dual-action (i.e., requires two motions to activate the station) pull station that includes an addressable interface (mounted inside) for Fire•Lite's addressable MS-9200, MS-9200UD, and MS-9600 fire alarm control panels. Because the BG-12LX is addressable, the control panel can display the exact location of the activated manual pull station. This leads fire service personnel quickly to the location of the alarm.

FEATURES

- Aesthetically pleasing, highly visible, dual-action design.
- Meets ADA 5 lb. maximum pull force.
- Easily operated (dual-action).
- Attractive shape and textured finish.
- Mounts, semi-flush, to a standard single-gang (2.125" [5.3975 cm] minimum depth), double-gang, or 4" (10.16 cm) square electrical box.
- When the handle latches in down position, the word "ACTIVATED" appears at the top of the handle in bright yellow to clearly indicate the station has been operated.
- Key/lock reset; needs only a 1/4-turn to lock/unlock.
- Includes Braille text on station handle.
- Captive screw terminals wire-ready for easy connection to SLC loop (accepts up to 12 AWG/3.25 mm² wire).
- Optional trim ring (**BG-TR**).
- Meets UL 38, Standard for Manually Actuated Signaling Boxes.
- Maintenance personnel can open station (for inspection and testing) without causing an alarm condition.
- Built-in bicolor LED, which is visible through the handle of the station, flashes red in normal operation and latches on steady red when in alarm.

CONSTRUCTION

Shell, door, and handle are molded of durable LEXAN® (or polycarbonate equivalent) with a textured finish.

OPERATION

Pushing in, then pulling down on the handle causes it to latch in the down/activated position. Once latched, the word "ACTIVATED" (in bright yellow) appears at the top of the handle, while a portion of the handle protrudes from the bottom of the station. To reset the station, simply unlock the station with the key and pull the door open. This action resets the handle; closing the door automatically resets the switch.

LEXAN® is a registered trademark of GE Plastics, a subsidiary of General Electric Company.

52004p1.jpg

BG-12LX

Manual stations connect with two wires to one of the control panel SLC loops. Each manual station, on command from the control panel, sends data to the panel representing the state of the pull station switch. Two rotary decimal switches allow address settings (01-99).

PRODUCT LINE INFORMATION

BG-12LX	Dual-action addressable pull station. Includes key lock/reset feature.
SB-I/0	Surface backbox, indoor/outdoor.
SB-10	Surface backbox.
BG-TR	Optional trim ring.

Fire•Lite® Alarms is a Honeywell company.
This document is not intended to be used for installation purposes. We try to keep our product information up-to-date and accurate. We cannot cover all specific applications or anticipate all requirements. All specifications are subject to change without notice.
For more information, contact **Fire•Lite Alarms**, One Fire-Lite Place, Northford, Connecticut 06472.
Phone: (800) 627-3473, Toll-Free FAX: (877) 699-4105.

ISO 9001 CERTIFIED ENGINEERING & MANUFACTURING QUALITY SYSTEMS

INSTALLATION

The BG-12LX can be semi-flush mounted into a single-gang, double-gang, or standard 4" (10.16 cm) square electrical outlet box, or surface mounted to the Model SB-I/0 or SB-10 surface backbox. If the BG-12LX is semi-flush mounted, then the optional trim ring (BG-TR) may be used. The BG-TR is usually needed for semi-flush mounting with 4" (10.16 cm) or double-gang boxes (not with single-gang boxes).

ELECTRICAL SPECIFICATIONS

Normal operating voltage: 24 VDC.

Maximum SLC loop voltage: 28.0 VDC.

Maximum SLC loop current: 230 µA.

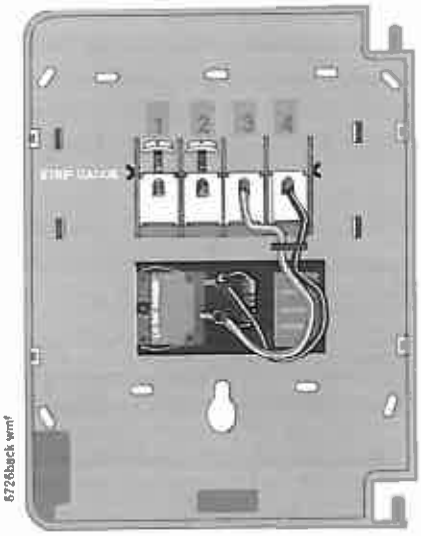

TERMINAL CONNECTIONS

1 SLC (–)

2 SLC (+)

Back of station without door.

ARCHITECTURAL/ ENGINEERING SPECIFICATIONS

Manual Fire Alarm Stations shall be non-code, with a key-operated reset lock in order that they may be tested, and so designed that after actual Emergency Operation, they cannot be restored to normal except by use of a key. An operated station shall automatically condition itself so as to be visually detected as activated. Manual stations shall be constructed of red-colored LEXAN® (or polycarbonate equivalent) with clearly visible operating instructions provided on the cover. The word **FIRE** shall appear on the front of the stations in white letters, 1.00 inches (2.54 cm) or larger. Stations shall be suitable for surface mounting on matching backbox SB-I/0 or SB-10; or semi-flush mounting on a standard single-gang, double-gang, or 4" (10.16 cm) square electrical box, and shall be installed within the limits defined by the Americans with Disabilities Act (ADA) or per national/local requirements. Manual Stations shall be Underwriters Laboratories listed.

Manual stations shall connect with two wires to one of the control panel SLC loops. The manual station shall, on command from the control panel, send data to the panel representing the state of the manual switch. Manual stations shall provide address setting by use of rotary decimal switches.

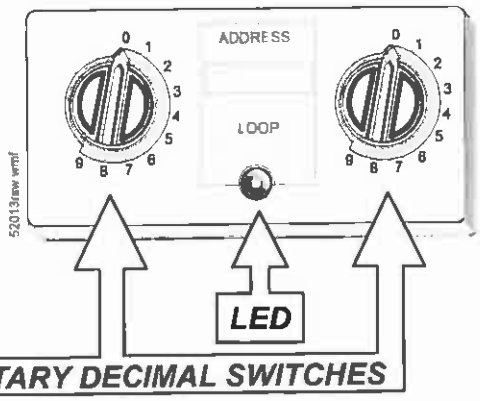

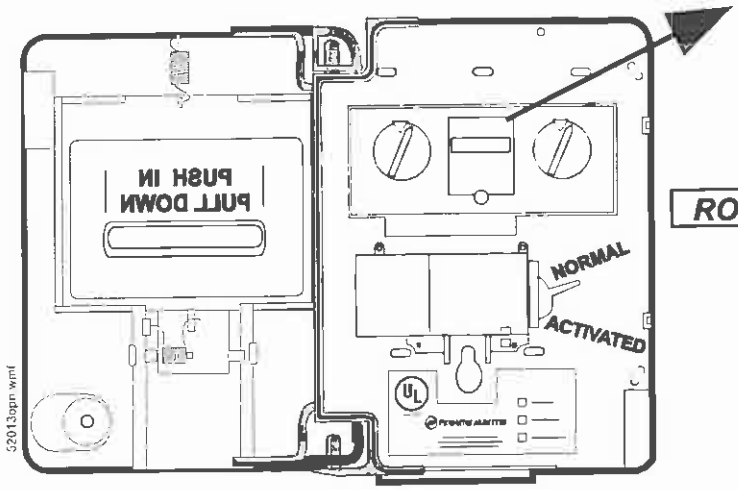

Cover open to show easy access to the addressable interface module, rotary switch, and UL label.

Selectable Output Horns, Strobes, and Horn/Strobes

SpectrAlert® Advance selectable-output horns, strobes, and horn/strobes are rich with features guaranteed to cut installation times and maximize profits.

The SpectrAlert Advance series of notification appliances is designed to simplify installations, with features such as plug in designs, instant feedback messages to ensure correct installation of individual devices, and 11 field-selectable candela settings for wall and ceiling strobes and horn/strobes.

When installing Advance products, first attach a universal mounting plate to a four-inch square, four-inch octagon or double-gang junction box. The two-wire mounting plate attaches to a single-gang junction box.

Next, connect the notification appliance circuit wiring to the SEMS terminals on the mounting plate.

Finally, attach the horn, strobe or horn/strobe to the mounting plate by inserting the product's tabs in the mounting plate's grooves. The device will rotate into position, locking the product's pins into the mounting plate's terminals. The device will temporarily hold in place with a catch until it is secured with a captured mounting screw.

The SpectrAlert Advance series includes outdoor notification appliances. Outdoor strobes and horn/strobes (two wire and four wire) are available for wall or ceiling. Outdoor horns are available for wall only. All System Sensor outdoor products are rated between minus 40 degrees Fahrenheit and 151 degrees Fahrenheit in wet or dry applications.

Features

- Electrically compatible with existing SpectrAlert products
- Automatic selection of 12- or 24-volt operation at 15 and 15/75 candela
- Plug-in design
- Field selectable candela settings on wall and ceiling units: 15, 15/75, 30, 75, 95, 110, 115, 135, 150, 177, 185
- Same mounting plate for wall- and ceiling-mount units
- Shorting spring on mounting plate for continuity check before installation
- Tamper resistant construction
- Outdoor wall and ceiling products rated from –40°F to 151°F
- Design allows minimal intrusion into the back box
- Horn rated at 88+ dbA at 16 volts
- Rotary switch for horn tone and three volume selections
- Outdoor products UL listed to UL 1638 (strobe) and UL 464 (horn) outdoor requirements
- Outdoor products rainproof per UL 50 (NEMA 3R)
- Compatible with MDL sync module

Agency Listings

SIGNALING UL LISTED
S4011
S5512
S3593

FM APPROVED
3023572

MEA approved
MEA452-05-E

7125-1653:186 (indoor strobes)
7300-1653:187 (outdoor strobes)
7125-1653:188 (horn/strobes, chime/strobes)
7135-1653:189 (horns, chimes)

SpectrAlert Advance Specifications

Architect/Engineer Specifications

General

SpectrAlert Advance horns, strobes and horn/strobes shall mount to a standard 4 × 4 × 1½-inch back box, 4-inch octagon back box or double-gang back box. Two-wire products shall also mount to a single-gang 2 × 4 × 1⅞-inch back box. A universal mounting plate shall be used for mounting ceiling and wall products. The notification appliance circuit wiring shall terminate at the universal mounting plate. Also, SpectrAlert Advance products, when used with the Sync•Circuit™ Module accessory, shall be powered from a non-coded notification appliance circuit output and shall operate on a nominal 12 or 24 volts. When used with the Sync•Circuit Module, 12-volt rated notification appliance circuit outputs shall operate between nine and 17.5 volts; 24-volt rated notification appliance circuit outputs shall operate between 17 and 33 volts. Indoor SpectrAlert Advance products shall operate between 32 and 120 degrees Fahrenheit from a regulated DC, or full-wave rectified, unfiltered power supply. Strobes and horn/strobes shall have field-selectable candela settings including 15, 15/75, 30, 75, 95, 110, 115, 135, 150, 177, 185.

Strobe

The strobe shall be a System Sensor SpectrAlert Advance Model _____ listed to UL 1971 and shall be approved for fire protective service. The strobe shall be wired as a primary-signaling notification appliance and comply with the Americans with Disabilities Act requirements for visible signaling appliances, flashing at 1Hz over the strobe's entire operating voltage range. The strobe light shall consist of a xenon flash tube and associated lens/reflector system.

Horn/Strobe Combination

The horn/strobe shall be a System Sensor SpectrAlert Advance Model _____ listed to UL 1971 and UL 464 and shall be approved for fire protective service. The horn/strobe shall be wired as a primary-signaling notification appliance and comply with the Americans with Disabilities Act requirements for visible signaling appliances, flashing at 1Hz over the strobe's entire operating voltage range. The strobe light shall consist of a xenon flash tube and associated lens/reflector system. The horn shall have three audibility options and an option to switch between a temporal three-pattern and a non-temporal (continuous) pattern. These options are set by a multiple position switch. On four-wire products, the strobe shall be powered independently of the sounder. The horn on horn/strobe models shall operate on a coded or non-coded power supply.

Outdoor Products

SpectrAlert Advance outdoor horns, strobes and horn/strobes shall be listed for outdoor use by UL and shall operate between minus 40 degrees and 151 degrees Fahrenheit. The products shall be listed for use with a System Sensor outdoor/weatherproof back box with half inch and three-fourths inch conduit entries.

Synchronization Module

The module shall be a System Sensor Sync•Circuit model MDL listed to UL 464 and shall be approved for fire protective service. The module shall synchronize SpectrAlert strobes at 1Hz and horns at temporal three. Also, while operating the strobes, the module shall silence the horns on horn/strobe models over a single pair of wires. The module shall mount to a 4 11/16 × 4 11/16 × 2⅛-inch back box. The module shall also control two Style Y (class B) circuits or one Style Z (class A) circuit. The module shall synchronize multiple zones. Daisy chaining two or more synchronization modules together will synchronize all the zones they control. The module shall not operate on a coded power supply.

Physical/Electrical Specifications	
Standard Operating Temperature	32°F to 120°F (0°C to 49°C)
K Series Operating Temperature	–40°F to 151°F (–40°C to 66°C)
Humidity Range	10 to 93% non-condensing (indoor products)
Strobe Flash Rate	1 flash per second
Nominal Voltage	Regulated 12DC/FWR or regulated 24DC/FWR[1]
Operating Voltage Range[2]	8 to 17.5 V (12V nominal) or 16 to 33 V (24 nominal)
Input terminal wire gauge	12 to 18 AWG
Ceiling mount dimensions (including lens)	6.8″ diameter × 2.5″ high (173 mm diameter × 64 mm high)
Wall mount dimensions (including lens)	5.6″L × 4.7″W × 2.5″D (142 mm L × 119 mm W × 64 mm D)
Horn dimensions	5.6″L × 4.7″W × 1.3″D (142 mm L × 119 mm W × 33 mm D)
Wall-mount back box skirt dimensions (BBS-2, BBSW-2)	5.9″L × 5.0″W × 2.2″D (151 mm L × 128 mm W × 56 mm D)
Ceiling-mount back box skirt dimensions (BBSC-2, BBSCW-2)	7.1″ diameter × 2.25″ high (180 mm diameter × 57 mm high)
Wall-mount weatherproof back box dimensions (SA-WBB)	5.7″L × 5.1″W × 2.0″D (145 mm L × 130 mm W × 51 mm D)
Ceiling-mount weatherproof back box dimensions (SA-WBBC)	7.1″ diameter × 2.0″ high (180 mm diameter × 51 mm high)

Notes:

1. Full Wave Rectified (FWR) voltage is a non-regulated, time varying power source that is used on some power supply and panel outputs.
2. P, S, PC, and SC products will operate at 12 V nominal only for 15 and 15/75 cd.

UL Current Draw Data

UL Max. Strobe Current Draw (mA RMS)

		8–17.5 Volts		16–33 Volts	
	Candela	DC	FWR	DC	FWR
Standard Candela Range	15*	123	128	66	71
	15/75*	142	148	77	81
	30*	NA	NA	94	96
	75*	NA	NA	158	153
	95*	NA	NA	181	176
	110	NA	NA	202	195
	115	NA	NA	210	205
High Candela Range	135	NA	NA	228	207
	150	NA	NA	246	220
	177	NA	NA	281	251
	185	NA	NA	286	258

UL Max. Horn Current Draw (mA RMS)

		8–17.5 Volts		16–33 Volts	
Sound Pattern	dB	DC	FWR	DC	FWR
Temporal	High	57	55	69	75
Temporal	Medium	44	49	58	69
Temporal	Low	38	44	44	48
Non-temporal	High	57	56	69	75
Non-temporal	Medium	42	50	60	69
Non-temporal	Low	41	44	50	50
Coded	High	57	55	69	75
Coded	Medium	44	51	56	69
Coded	Low	40	46	52	50

UL Max. Current Draw (mA RMS), 2-wire Horn/Strobe, Standard Candela Range (15–115 cd)

	8–17.5 Volts		16–33 Volts						
DC Input	15	15/75	15	15/75	30	75	95	110	115
Temporal High	137	147	79	90	107	176	194	212	218
Temporal Medium	132	144	69	80	97	157	182	201	210
Temporal Low	132	143	66	77	93	154	179	198	207
Non-temporal High	141	152	91	100	116	176	201	221	229
Non-temporal Medium	133	145	75	85	102	163	187	207	216
Non-temporal Low	131	144	68	79	96	156	182	201	210
FWR Input									
Temporal High	136	155	88	97	112	168	190	210	218
Temporal Medium	129	152	78	88	103	160	184	202	206
Temporal Low	129	151	76	86	101	160	184	194	201
Non-temporal High	142	161	103	112	126	181	203	221	229
Non-temporal Medium	134	155	85	95	110	166	189	208	216
Non-temporal Low	132	154	80	90	105	161	184	202	211

UL Max. Current Draw (mA RMS), 2-wire Horn/Strobe, High Candela Range (135–185 cd)

	16–33 Volts					16–33 Volts			
DC Input	135	150	177	185	FWR Input	135	150	177	185
Temporal High	245	259	290	297	Temporal High	215	231	258	265
Temporal Medium	235	253	288	297	Temporal Medium	209	224	250	258
Temporal Low	232	251	282	292	Temporal Low	207	221	248	256
Non-temporal High	255	270	303	309	Non-temporal High	233	248	275	281
Non-temporal Medium	242	259	293	299	Non-temporal Medium	219	232	262	267
Non-temporal Low	238	254	291	295	Non-temporal Low	214	229	256	262

Candela Derating

For K series products used at low temperatures, listed candela ratings must be reduced in accordance with this table.

Strobe Output (cd)

Listed Candela	Candela rating at –40°F
15	Do not use below 32°F
15/75	
30	
75	44
95	70
110	110
115	115
135	135
150	150
177	177
185	185

Horn Tones and Sound Output Data

Horn and Horn/Strobe Output (dBA)

			8–17.5 Volts		16–33 Volts		24 Volt Nominal			
							Reverberant		Anechoic	
Switch Position	Sound Pattern	dB	DC	FWR	DC	FWR	DC	FWR	DC	FWR
1	Temporal	High	78	78	84	84	88	88	99	98
2	Temporal	Medium	74	74	80	80	86	86	96	96
3	Temporal	Low	71	73	76	76	83	80	94	89
4	Non-temporal	High	82	82	88	88	93	92	100	100
5	Non-temporal	Medium	78	78	85	85	90	90	98	98
6	Non-temporal	Low	75	75	81	81	88	84	96	92
7†	Coded	High	82	82	88	88	93	92	101	101
8†	Coded	Medium	78	78	85	85	90	90	97	98
9†	Coded	Low	75	75	81	81	88	85	96	92

†Settings 7, 8, and 9 are not available on 2-wire horn/strobe.

SpectrAlert Advance Dimensions

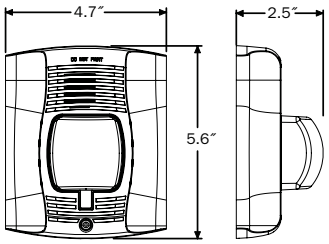

Wall-mount horn/strobes

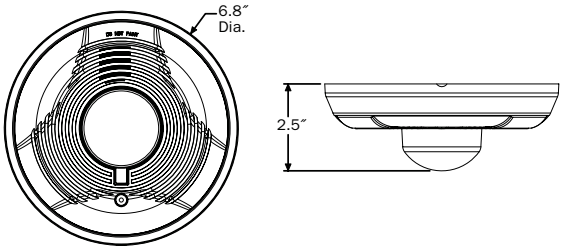

Ceiling-mount horn/strobes

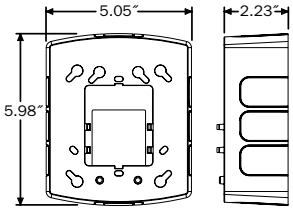

Wall back box skirt

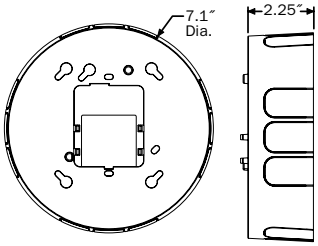

Ceiling back box skirt

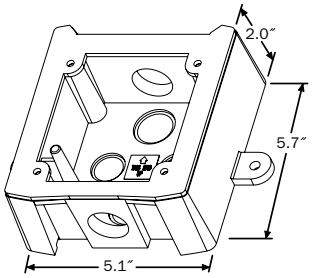

Wall weatherproof back box

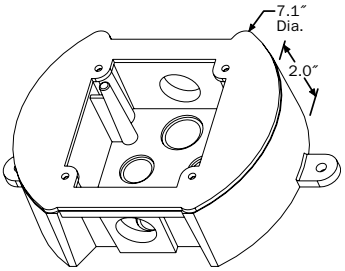

Ceiling weatherproof back box

SpectrAlert Advance Ordering Information

Model	Description
Wall Horn/Strobes	
P2R*†	2-wire Horn/Strobe, Standard cd‡, Red
P2RH*	2-wire Horn/Strobe, High cd, Red
P2RK*	2-wire Horn/Strobe, Standard cd, Red, Outdoor
P2RHK*	2-wire Horn/Strobe, High cd, Red, Outdoor
P2W*	2-wire Horn/Strobe, Standard cd, White
P2WH*	2-wire Horn/Strobe, High cd, White
P4R*	4-wire Horn/Strobe, Standard cd, Red
P4RH*	4-wire Horn/Strobe, High cd, Red
P4RK	4-wire Horn/Strobe, Standard cd, Red, Outdoor
P4RHK	4-wire Horn/Strobe, High cd, Red, Outdoor
P4W*	4-wire Horn/Strobe, Standard cd, White
P4WH*	4-wire Horn/Strobe, High cd, White
Wall Strobes	
SR*†	Strobe, Standard cd, Red
SRH*†	Strobe, High cd, Red
SRK	Strobe, Standard cd, Red, Outdoor
SRHK	Strobe, High cd, Red, Outdoor
SW*	Strobe, Standard cd, White
SWH*	Strobe, High cd, White
Ceiling Horn/Strobes	
PC2R*	2-wire Horn/Strobe, Standard cd, Red
PC2RH*	2-wire Horn/Strobe, High cd, Red
PC2RK	2-wire Horn/Strobe, Standard cd, Red, Outdoor
PC2RHK	2-wire Horn/Strobe, High cd, Red, Outdoor

Model	Description
Ceiling Horn/Strobes (cont'd.)	
PC2W*†	2-wire Horn/Strobe, Standard cd, White
PC2WH*†	2-wire Horn/Strobe, High cd, White
PC4R	4-wire Horn/Strobe, Standard cd, Red
PC4RH	4-wire Horn/Strobe, High cd, Red
PC4RK	4-wire Horn/Strobe, Standard cd, Red, Outdoor
PC4RHK	4-wire Horn/Strobe, High cd, Red, Outdoor
PC4W	4-wire Horn/Strobe, Standard cd, White
PC4WH	4-wire Horn/Strobe, High cd, White
Ceiling Strobes	
SCR*	Strobe, Standard cd, Red
SCRH*	Strobe, High cd, Red
SCRK	Strobe, Standard cd, Red, Outdoor
SCRHK	Strobe, High cd, Red, Outdoor
SCW*†	Strobe, Standard cd, White
SCWH*†	Strobe, High cd, White
Horns	
HR	Horn, Red
HRK	Horn, Red, Outdoor
HW	Horn, White
Accessories	
BBS-2	Back Box Skirt, Wall, Red
BBSW-2	Back Box Skirt, Wall, White
BBSC-2	Back Box Skirt, Ceiling, Red
BBSCW-2	Back Box Skirt, Ceiling, White

Notes:

* Add "-P" to model number for plain housing (no "FIRE" marking on cover), e.g., P2R-P

† Add "-SP" to model number for "FUEGO" marking on cover, e.g., P2R-SP

‡ "Standard cd," refers to strobes that include 15, 15/75, 30, 75, 95, 110, and 115 candela settings. "High cd," refers to strobes that include 135, 150, 177, and 185 candela settings.

All outdoor units ending in "K" include a weatherproof back box.

SYSTEM SENSOR®

3825 Ohio Avenue • St. Charles, IL 60174
Phone: 800-SENSOR2 • Fax: 630-377-6495

©2006 System Sensor.
Product specifications subject to change without notice. Visit systemsensor.com for current product information, including the latest version of this data sheet.

A05-0395-003 • 12/06 • #1676

Multi-Voltage Control Relay

Model PAM-1

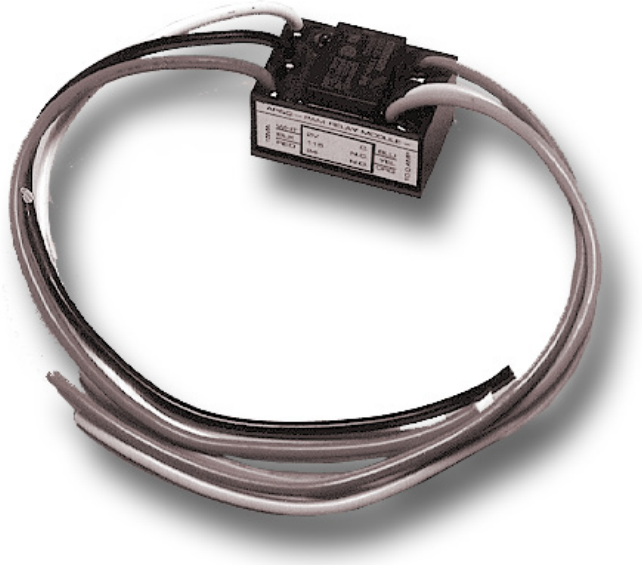

Overview

The PAM-1 Relay is encapsulated multi-voltage device providing 10 Amp Form C contacts. The relay may be energized by one of three input voltages: 24 Vac, 24 Vdc, or 115 Vac.

A red LED is provided which, when illuminated, indicates the relay coil is energized.

The PAM-1 may be mounted by using the double-sided adhesive tape, the self-drilling screw, or loosely placed in a back box.

The PAM-1 is ideal for applications where remote relays are required for control or status feedback. They are suitable for use with HVAC, Temperature Control, Fire Alarm, Security, Energy Management, and Lighting Control Systems.

Standard Features

- Completely encapsulated 10 Amp relay
- Relay may be energized by one of three input voltages
- Contains a red LED which illuminates when relay coil is energized
- May be mounted by double-sided adhesive tape, self-drilling screw or placed in back box
- Convenient 6 in (150mm) wire leads for electrical connections

Wiring

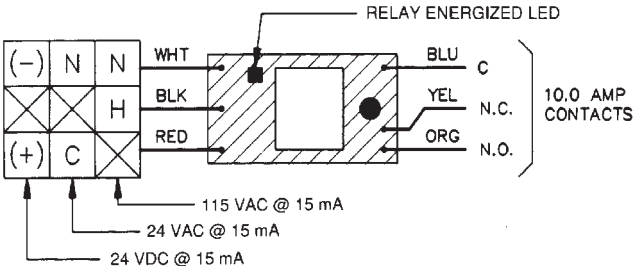

EDWARDS
A UTC Fire & Security Company

Detection & alarm since 1872

U.S.
T 800 336 4206
F 860 284 3083

Canada
Chubb Edwards
T 519 376 2430
F 519 376 7258

Southeast Asia
T : +65 6391 9300
F : +65 6391 9306

India
T : +91 80 4344 2000
F : +91 80 4344 2050

Australia
T +61 3 9239 1200
F +61 3 9239 1299

Europe
T +32 2 725 11 20
F +32 2 721 86 13

Latin America
T 305 593 4301
F 305 593 4300

www.edwardssignaling.com

© 2010 UTC Fire & Security.
All rights reserved.

Specifications

Power Requirments	15 mA per position @ 24 Vdc, 24 Vac, 115 Vac
Relay	UL Recognized SPDT
Contact Rating	10 Amps @ 115 Vac
Ambient Temperature	-58°F to 185°F (-50°C to 85°C)
Approvals	UL Recognized components
Dimensions	1.5 H x 1 W .875 D inches (38.1 x 24.5 x 22.2 mm) with 6 inch (150mm) wire leads 18 AWG (1.00mm^2)

Ordering Information

Model	Description
PAM-1	Single SPDT relay with LED double-sided adhesive tape, mounting screw and 6 in (150 mm) leads.

FIRE-LITE ALARMS

One Fire-Lite Place
Northford, CT 06472-1653 USA

203-484-7161
203-484-1098 Fax

DATE: 09/01/04

Fire-Lite Alarms announces a New Surface Mount Back Box For The BG-12 Series!

Dear Valued Customer,

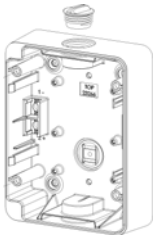

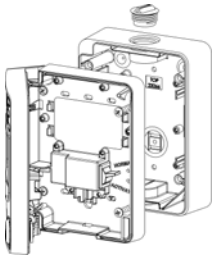

Fire-Lite is pleased to announce the new SB-I/O surface mount back box for use with the BG-12 Series of pull stations. Designed to replace the SB-10, the SB-I/O is UL listed for indoor and outdoor applications. Since the metal SB-10 surface mount back box is still required in a few jurisdictions, limited quantities will be maintained to support these regions. The BG-12LRA Agent Release pull station will still use the SBA-10 back box. The BG-12LOB outdoor pull station is currently shipped with a WBB back box. Please note that the WBB will be replaced with the SB-I/O by early fourth quarter. Currently, you may order the BG-12LO and the SB-I/O separately. The WBB will still be offered for use with System Sensor's SpectrAlert series.

In addition to being molded out of an increased UV stabilized polycarbonate material (94V-O), the SB-I/O's mounting holes and bottom conduit entry are molded with a thin wall of material to provide improved outdoor weatherability.

Additional features of the SB-I/O include:

- Molded Self-Sealing Mounting Bosses
- Snap Latches for Easy Installation of the Pull Station
- Two Reinforced ½" NPT Connector Outlets (One Plug Included)
- Single-gang Electrical Box Mounting Holes (Knockouts)
- Four #10 x 1.00" Mounting Screws Included
- UL, ULC and CSFM Listed, FM and MEA Pending.

For information on pricing and available inventory, please contact your Fire-Lite Customer Service Representative at 203-484-7161.

Sincerely,

Carlos Abreu
Outside Vendor Associate Product Manager
Honeywell Fire Group

#04-NPIB-01FL

FIRE·LITE® ALARMS

www.firelite.com

July 14, 2004 DF-52384 • E-160

SD355(A)/ SD355T(A)

Addressable Photoelectric Smoke Detectors

Section: Addressable Devices

GENERAL

The Fire•Lite Alarms **SD355** and **SD355T** addressable, low-profile plug-in photoelectric detectors use a state-of-the-art photoelectric sensing chamber with communications to provide open area protection and are used exclusively with Fire•Lite's **MS-9200, MS-9200UD**, and **MS-9600** Addressable Fire Alarm Control Panels (FACPs). The SD355T adds thermal sensors that will alarm at a fixed temperature of 135°F (57°C). Since these detectors are addressable, they will help emergency personnel quickly locate a fire during its early stages, potentially saving precious rescue time while also reducing property damage. Two LEDs on each sensor light to provide a local, visible sensor indication. Remote LED annunciator capability is available as an optional accessory (P/N **RA400Z**).

UL LISTED S1059

ULC

MEA

California State Fire Marshal 7272-0075:194

FM APPROVED

6934pho1.jpg

SD355 with B350LP base

6935pho1.jpg

SD355T with B350LP base

FEATURES

SLC loop:

- Two-wire loop connection.
- Unit uses base for wiring, detector head plugs-in.

Addressing:

- Addressable by device.
- Direct Decade 01 – 99 (MS-9200, MS-9200UD) and 01 – 159 (MS-9600) entry of address.

Architecture:

- Unique single-source, dual-chamber design to respond quickly and dependably to a broad range of fires.
- Sleek, low-profile design.
- Integral communications and built-in type identification.
- Built-in tamper-resistant feature.
- Removable cover and insect-resistant screen for simple field cleaning.

Operation:

- Withstands air velocities up to 1,500 feet-per-minute (7.6 m/sec.) without triggering a false alarm.
- Factory preset at 1.5% nominal sensitivity for panel alarm threshold level.
- Visible LED "blinks" when the unit is addressed (communicating with the fire panel) and latches on in alarm.

Mechanicals:

- Sealed against back pressure.
- Direct surface mounting or electrical box mounting.
- Mounts to: single-gang box, 3.5" (8.89 cm) or 4.0" (10.16 cm) octagonal box, or 4.0" (10.16 cm) square electrical box *(using a plaster ring — included)*.

Other system features:

- Fully coated circuit boards and superior RF/transient protection.
- 94-V0 plastic flammability rating.
- Low standby current.

Options:

- Remote LED output connection (P/N RA400Z).

APPLICATIONS

Use photoelectric detectors in life-safety applications to provide a broad range of fire-sensing capability, especially where smoldering fires are anticipated. Ionization detectors are often better than photoelectric detectors at sensing fast, flaming fires.

Fire•Lite® **Alarms** is a Honeywell **company.**
This document is not intended to be used for installation purposes. We try to keep our product information up-to-date and accurate. We cannot cover all specific applications or anticipate all requirements. All specifications are subject to change without notice.
For more information, contact Fire•Lite Alarms, One Fire-Lite Place, Northford, Connecticut 06472. Phone: (800) 627-3473, Toll-Free FAX: (877) 699-4105.

ISO 9001 CERTIFIED ENGINEERING & MANUFACTURING QUALITY SYSTEMS

CONSTRUCTION

These detectors are constructed of off-white LEXAN®. SD355(T) plug-in, low-profile smoke detectors are designed to commercial standards and offer an attractive appearance.

LEXAN® is a registered trademark of GE Plastics, a subsidiary of General Electric Company.

INSTALLATION

SD350(T) plug-in detectors use a detachable mounting base to simplify installation, service and maintenance. Mount base on box which is at least 1.5 inches (3.81 cm) deep. Suitable boxes include:

- 4.0" (10.16 cm) square box with plaster ring.
- 4.0" (10.16 cm) octagonal box.
- 3.5" (8.89 cm) octagonal box.
- Single-gang box.

***NOTE:** Because of the inherent supervision provided by the SLC loop, end-of-line resistors are not required. Wiring "T-taps" or branches are permitted for Style 4 (Class B) wiring only.*

OPERATION

Each SD355(T) uses one of 99 possible addresses on the MS-9200 and MS-9200UD Signaling Line Circuit (SLC), or up to 318 (159 on each loop) on the MS-9600 SLC. It responds to regular polls from the system and reports its type and status.

The SD355(T) addressable photoelectric sensor's unique unipolar chamber responds quickly and uniformly to a broad range of smoke conditions and can withstand wind gusts up to 1,500 feet-per-minute (7.6 m/sec.) without sending an alarm level signal. Because of its unipolar chamber, the SD355(T) is approximately two times more responsive than most photoelectric sensors. This makes it a more stable detector.

DETECTOR SENSITIVITY TEST

Each detector can have their sensitivity tested (required per NFPA 72, Chapter 7 on *Inspection, Testing and Maintenance*) when installed/connected to an MS-9200, MS-9200UD, or MS-9600 addressable fire alarm control panel. The results of the sensitivity test can be printed off the MS-9200, MS-9200UD, or MS-9600 for record keeping.

SPECIFICATIONS

Voltage range: 15 – 32 VDC (peak).

Standby current: 300 µA @ 24 VDC.

LED current: 6.5 mA @ 24 VDC (latched "ON").

Air velocity: 1,500 ft./min. (7.6 m/sec.) maximum.

Diameter: 6.1" (15.5 cm) installed in B350LP base.

Height: 2.1" (5.33 cm) installed in B350LP base.

Weight: 3.6 oz. (102 g).

Operating temperature range: ***for SD355:*** 0°C to 49°C (32°F to 120°F) SD350; ***for SD355T:*** 0°C to 38°C (32°F to 100°F).

Temperature: 0°C – 49°C (32°F – 120°F).

Relative humidity: 10% – 93%, non-condensing.

PRODUCT LINE INFORMATION

***NOTE:** "A" suffix indicates ULC-Listed model.*

SD355	Addressable photoelectric detector *(B350LP base included).*
SD355A	Same as SD355 with ULC Listing *(B350LPA base included).*
SD355T	Same as SD355 but with ***thermal*** element *(B350LP base included).*
SD355TA	Same as SD355T with ULC Listing *(B350LPA base included).*
RA400Z(A)	Remote LED. Mounts to a single-gang box.
B350LP(A)	Plug-in detector base (included). ***Dimensions:*** 6.1" (15.5 cm). ***Mounting:*** 4.0" (10.16 cm) square box with or without plastic ring, 4.0" (10.16 cm) octagonal box, 3.5" (8.89 cm) octagonal box, or single-gang box. All mounting boxes have a minimum depth of 1.5" (3.81 cm).
B224RB(A)	Plug-in System Sensor ***relay*** detector base. ***Diameter:*** 6.2" (15.75 cm). ***Mounting:*** 4.0" (10.16 cm) square box with or without plastic ring, 4.0" (10.16 cm) octagonal box, or 3.5" (8.89 cm) octagonal box. All mounting boxes have a minimum depth of 1.5" (3.81 cm).
B224BI(A)	Intelligent isolator base, isolator SLC from shorts on the loop.
B501BH(A)	Plug-in System Sensor ***sounder*** detector base. ***Diameter:*** 6.0" (15.24 cm). ***Mounting:*** 4.0" (10.16 cm) square box with or without plastic ring. Mounting box has a minimum depth of 1.5" (3.81 cm).
B501BHT(A)	Same as B501BBH(A), but includes temporal sounder.

Accessories:

RA400Z(A)	Remote LED annunciator. 3 – 32 VDC. Fits U.S. single-gang electrical box. *For use with B501(A) and B350LP(A) bases only.*
SMK400	Surface mounting kit provides for entry of surface wiring conduit. *For use with B501(A) base **only**.*
RMK400	Recessed mounting kit. *For use with B501(A) base **only**.*
M02-04-01	Test magnet.
XR-2	Detector removal tool. Allows installation and/or removal of detector heads from bases in high ceiling applications.
XP-4	Extension pole for XR-2. Comes in three 5-ft. (1.524 m) sections.

FIRE-LITE® ALARMS

www.firelite.com

MMF-300-10(A)

Ten-Input Monitor Module

Section: Addressable Devices

GENERAL

The Fire-Lite Alarm's **MMF-300-10(A) ten-input monitor module** provides an interface between the MS-9200, MS-9200UD or MS-9600 and normally open contact devices such as pull stations, security contacts, or flow switches.

The first address on the MMF-300-10 (A) is set from 01 to 150 and the remaining modules are automatically assigned to the next nine higher addresses. Provisions are included for disabling a maximum of two unused addresses.

The supervised state (normal, open, or short) of the monitored device is sent back to the panel. A common SLC input is used for all modules, and the initiating device loops share a common supervisory supply and ground — otherwise each monitor operates independently from the others.

Each MMF-300-10(A) module has panel-controlled green LED indicators. The panel can cause the LEDs to blink, latch on, or latch off.

UL LISTED S3705

FM APPROVED

California State Fire Marshal 7300-0075:205

MEA 55-02-E

ULC CSXXXX

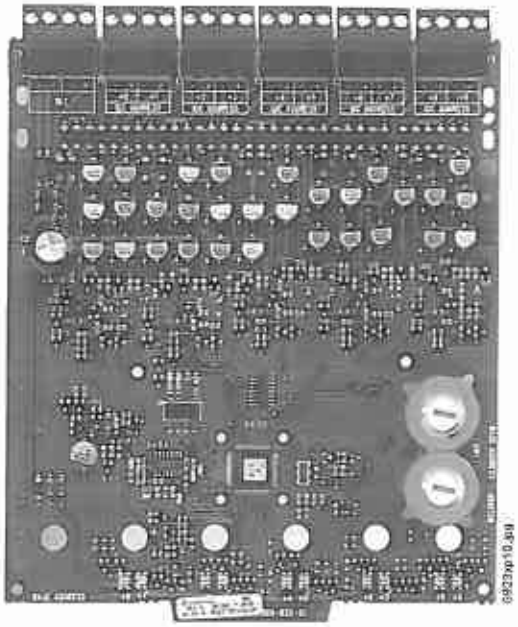

FEATURES

- Ten addressable Class B or five addressable Class A initiating device circuits.
- Removable 12 AWG (3.25 mm²) to 18 AWG (0.9 mm²) plug-in terminal blocks.
- Status indicators for each point.
- Unused addresses may be disabled.
- Rotary address switches.
- Mount one or two modules in a BB-2F cabinet (optional).
- Mount up to six modules on a CHS-6 chassis in a BB-6F (BB-6F and CHS-6 sold seperately).
- Mounting hardware included.

SPECIFICATIONS

Standby current: 3.5 mA (SLC current draw with all addresses used; if some addresses are disabled, the standby current decreases).

Alarm current: 60 mA (assumes all ten LEDs solid ON).

Temperature range: 32°F to 120°F (0°C to 49°C) for UL applications.

Humidity: 10% to 85% noncondensing for UL applications; 10% to 93% noncondensing for EN54 applications.

Dimensions: 6.8" (172.72 mm) high x 5.8" (147.32 mm) wide x 1.25" (31.75 mm) deep.

Shipping weight: 1.1 lb. (0.499 kg) including packaging.

Wire gauge: 12 AWG (3.25 mm²) to 18 AWG (0.9 mm²).

Power-limited circuits must imply type FPL, FPLR, or FPLP cable as required by Article 760 of the NEC.

MMF-300-10 is shipped in Class B position; remove shunt for Class A operation.

Maximum SLC wiring resistance: 40 or 50 ohms, panel dependent.

Maximum IDC wiring resistance: 1500 ohms.

Maximum IDC voltage: 12 VDC.

Maximum IDC current: 1 mA.

PRODUCT LINE INFORMATION

MMF-300-10: Ten-input monitor module.

MMF-300-10(A): Ten-input monitor module (Canada).

Fire•Lite® Alarms is a Honeywell company.
This document is not intended to be used for installation purposes. We try to keep our product information up-to-date and accurate. We cannot cover all specific applications or anticipate all requirements. All specifications are subject to change without notice.
For more information, contact Fire•Lite Alarms, One Fire-Lite Place, Northford, Connecticut 06472. Phone: (800) 627-3473, Toll-Free FAX: (877) 699-4105.

ISO 9001 CERTIFIED ENGINEERING & MANUFACTURING QUALITY SYSTEMS

WIRING DIAGRAMS

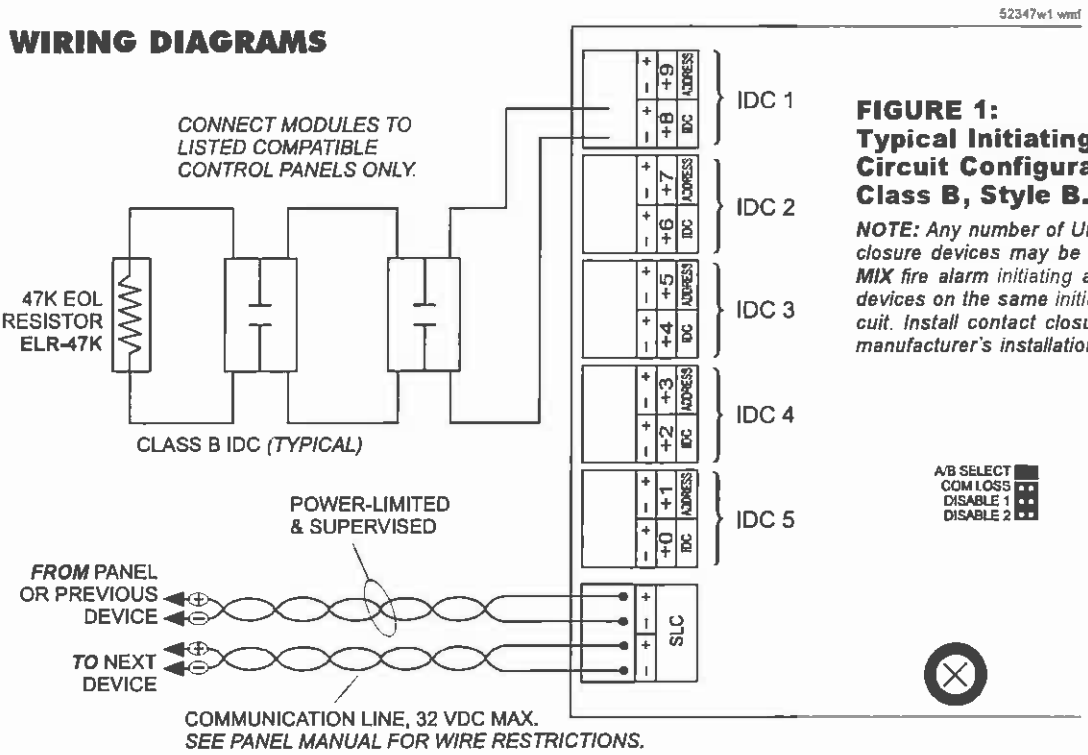

FIGURE 1:
Typical Initiating Device Circuit Configuration — Class B, Style B.

NOTE: *Any number of UL-Listed contact closure devices may be used.* ***DO NOT MIX*** *fire alarm initiating and supervisory devices on the same initiating device circuit. Install contact closure devices per manufacturer's installation instructions.*

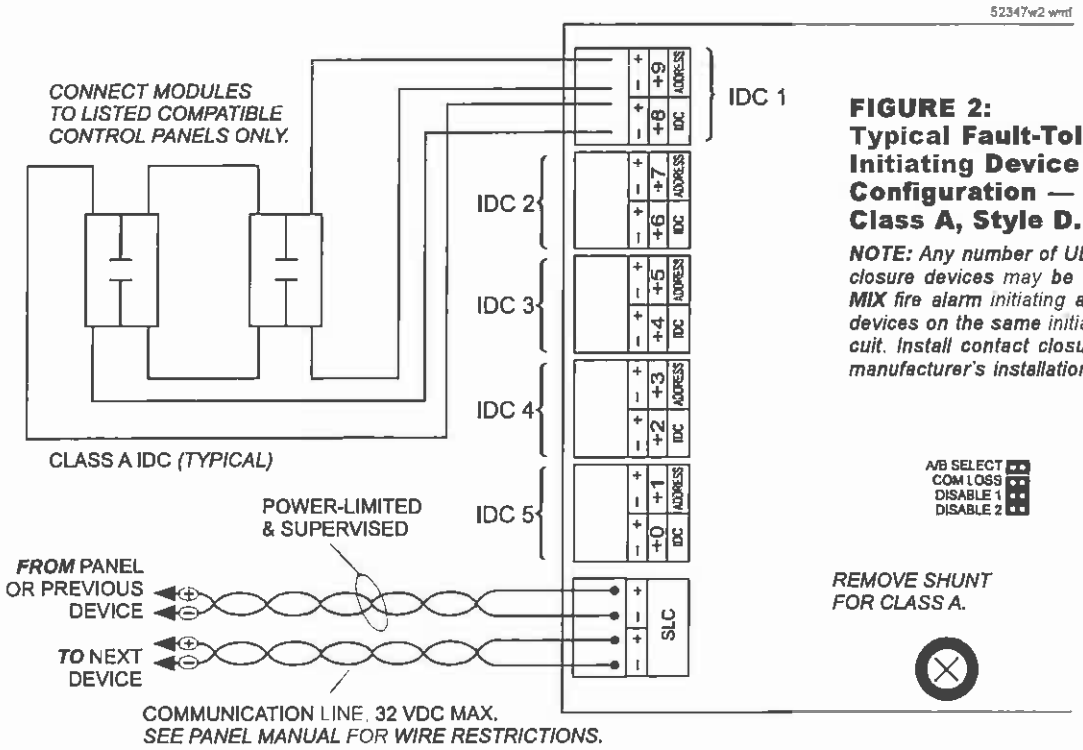

FIGURE 2:
Typical Fault-Tolerant Initiating Device Circuit Configuration — Class A, Style D.

NOTE: *Any number of UL-Listed contact closure devices may be used.* ***DO NOT MIX*** *fire alarm initiating and supervisory devices on the same initiating device circuit. Install contact closure devices per manufacturer's installation instructions.*

Selectable Output Horns, Strobes, and Horn/Strobes

SpectrAlert® Advance selectable-output horns, strobes, and horn/strobes are rich with features guaranteed to cut installation times and maximize profits.

The SpectrAlert Advance series of notification appliances is designed to simplify installations, with features such as plug in designs, instant feedback messages to ensure correct installation of individual devices, and 11 field-selectable candela settings for wall and ceiling strobes and horn/strobes.

When installing Advance products, first attach a universal mounting plate to a four-inch square, four-inch octagon or double-gang junction box. The two-wire mounting plate attaches to a single-gang junction box.

Next, connect the notification appliance circuit wiring to the SEMS terminals on the mounting plate.

Finally, attach the horn, strobe or horn/strobe to the mounting plate by inserting the product's tabs in the mounting plate's grooves. The device will rotate into position, locking the product's pins into the mounting plate's terminals. The device will temporarily hold in place with a catch until it is secured with a captured mounting screw.

The SpectrAlert Advance series includes outdoor notification appliances. Outdoor strobes and horn/strobes (two wire and four wire) are available for wall or ceiling. Outdoor horns are available for wall only. All System Sensor outdoor products are rated between minus 40 degrees Fahrenheit and 151 degrees Fahrenheit in wet or dry applications.

Features

- Electrically compatible with existing SpectrAlert products
- Automatic selection of 12- or 24-volt operation at 15 and 15/75 candela
- Plug-in design
- Field selectable candela settings on wall and ceiling units: 15, 15/75, 30, 75, 95, 110, 115, 135, 150, 177, 185
- Same mounting plate for wall- and ceiling-mount units
- Shorting spring on mounting plate for continuity check before installation
- Tamper resistant construction
- Outdoor wall and ceiling products rated from –40°F to 151°F
- Design allows minimal intrusion into the back box
- Horn rated at 88+ dbA at 16 volts
- Rotary switch for horn tone and three volume selections
- Outdoor products UL listed to UL 1638 (strobe) and UL 464 (horn) outdoor requirements
- Outdoor products rainproof per UL 50 (NEMA 3R)
- Compatible with MDL sync module

Agency Listings

SIGNALING UL LISTED
S4011
S5512
S3593

FM APPROVED
3023572

MEA approved
MEA452-05-E

7125-1653:186 (indoor strobes)
7300-1653:187 (outdoor strobes)
7125-1653:188 (horn/strobes, chime/strobes)
7135-1653:189 (horns, chimes)

SpectrAlert Advance Specifications

Architect/Engineer Specifications

General

SpectrAlert Advance horns, strobes and horn/strobes shall mount to a standard 4 × 4 × 1½-inch back box, 4-inch octagon back box or double-gang back box. Two-wire products shall also mount to a single-gang 2 × 4 × 1⅞-inch back box. A universal mounting plate shall be used for mounting ceiling and wall products. The notification appliance circuit wiring shall terminate at the universal mounting plate. Also, SpectrAlert Advance products, when used with the Sync•Circuit™ Module accessory, shall be powered from a non-coded notification appliance circuit output and shall operate on a nominal 12 or 24 volts. When used with the Sync•Circuit Module, 12-volt rated notification appliance circuit outputs shall operate between nine and 17.5 volts; 24-volt rated notification appliance circuit outputs shall operate between 17 and 33 volts. Indoor SpectrAlert Advance products shall operate between 32 and 120 degrees Fahrenheit from a regulated DC, or full-wave rectified, unfiltered power supply. Strobes and horn/strobes shall have field-selectable candela settings including 15, 15/75, 30, 75, 95, 110, 115, 135, 150, 177, 185.

Strobe

The strobe shall be a System Sensor SpectrAlert Advance Model _____ listed to UL 1971 and shall be approved for fire protective service. The strobe shall be wired as a primary-signaling notification appliance and comply with the Americans with Disabilities Act requirements for visible signaling appliances, flashing at 1Hz over the strobe's entire operating voltage range. The strobe light shall consist of a xenon flash tube and associated lens/reflector system.

Horn/Strobe Combination

The horn/strobe shall be a System Sensor SpectrAlert Advance Model _____ listed to UL 1971 and UL 464 and shall be approved for fire protective service. The horn/strobe shall be wired as a primary-signaling notification appliance and comply with the Americans with Disabilities Act requirements for visible signaling appliances, flashing at 1Hz over the strobe's entire operating voltage range. The strobe light shall consist of a xenon flash tube and associated lens/reflector system. The horn shall have three audibility options and an option to switch between a temporal three-pattern and a non-temporal (continuous) pattern. These options are set by a multiple position switch. On four-wire products, the strobe shall be powered independently of the sounder. The horn on horn/strobe models shall operate on a coded or non-coded power supply.

Outdoor Products

SpectrAlert Advance outdoor horns, strobes and horn/strobes shall be listed for outdoor use by UL and shall operate between minus 40 degrees and 151 degrees Fahrenheit. The products shall be listed for use with a System Sensor outdoor/weatherproof back box with half inch and three-fourths inch conduit entries.

Synchronization Module

The module shall be a System Sensor Sync•Circuit model MDL listed to UL 464 and shall be approved for fire protective service. The module shall synchronize SpectrAlert strobes at 1Hz and horns at temporal three. Also, while operating the strobes, the module shall silence the horns on horn/strobe models over a single pair of wires. The module shall mount to a 4 11/16 × 4 11/16 × 2⅛-inch back box. The module shall also control two Style Y (class B) circuits or one Style Z (class A) circuit. The module shall synchronize multiple zones. Daisy chaining two or more synchronization modules together will synchronize all the zones they control. The module shall not operate on a coded power supply.

Physical/Electrical Specifications	
Standard Operating Temperature	32°F to 120°F (0°C to 49°C)
K Series Operating Temperature	–40°F to 151°F (–40°C to 66°C)
Humidity Range	10 to 93% non-condensing (indoor products)
Strobe Flash Rate	1 flash per second
Nominal Voltage	Regulated 12DC/FWR or regulated 24DC/FWR[1]
Operating Voltage Range[2]	8 to 17.5 V (12V nominal) or 16 to 33 V (24 nominal)
Input terminal wire gauge	12 to 18 AWG
Ceiling mount dimensions (including lens)	6.8″ diameter × 2.5″ high (173 mm diameter × 64 mm high)
Wall mount dimensions (including lens)	5.6″L × 4.7″W × 2.5″D (142 mm L × 119 mm W × 64 mm D)
Horn dimensions	5.6″L × 4.7″W × 1.3″D (142 mm L × 119 mm W × 33 mm D)
Wall-mount back box skirt dimensions (BBS-2, BBSW-2)	5.9″L × 5.0″W × 2.2″D (151 mm L × 128 mm W × 56 mm D)
Ceiling-mount back box skirt dimensions (BBSC-2, BBSCW-2)	7.1″ diameter × 2.25″ high (180 mm diameter × 57 mm high)
Wall-mount weatherproof back box dimensions (SA-WBB)	5.7″L × 5.1″W × 2.0″D (145 mm L × 130 mm W × 51 mm D)
Ceiling-mount weatherproof back box dimensions (SA-WBBC)	7.1″ diameter × 2.0″ high (180 mm diameter × 51 mm high)

Notes:

1. Full Wave Rectified (FWR) voltage is a non-regulated, time varying power source that is used on some power supply and panel outputs.
2. P, S, PC, and SC products will operate at 12 V nominal only for 15 and 15/75 cd.

UL Current Draw Data

UL Max. Strobe Current Draw (mA RMS)

		8–17.5 Volts		16–33 Volts	
	Candela	DC	FWR	DC	FWR
Standard Candela Range	15*	123	128	66	71
	15/75*	142	148	77	81
	30*	NA	NA	94	96
	75*	NA	NA	158	153
	95*	NA	NA	181	176
	110	NA	NA	202	195
	115	NA	NA	210	205
High Candela Range	135	NA	NA	228	207
	150	NA	NA	246	220
	177	NA	NA	281	251
	185	NA	NA	286	258

UL Max. Horn Current Draw (mA RMS)

		8–17.5 Volts		16–33 Volts	
Sound Pattern	dB	DC	FWR	DC	FWR
Temporal	High	57	55	69	75
Temporal	Medium	44	49	58	69
Temporal	Low	38	44	44	48
Non-temporal	High	57	56	69	75
Non-temporal	Medium	42	50	60	69
Non-temporal	Low	41	44	50	50
Coded	High	57	55	69	75
Coded	Medium	44	51	56	69
Coded	Low	40	46	52	50

UL Max. Current Draw (mA RMS), 2-wire Horn/Strobe, Standard Candela Range (15–115 cd)

	8–17.5 Volts		16–33 Volts						
DC Input	15	15/75	15	15/75	30	75	95	110	115
Temporal High	137	147	79	90	107	176	194	212	218
Temporal Medium	132	144	69	80	97	157	182	201	210
Temporal Low	132	143	66	77	93	154	179	198	207
Non-temporal High	141	152	91	100	116	176	201	221	229
Non-temporal Medium	133	145	75	85	102	163	187	207	216
Non-temporal Low	131	144	68	79	96	156	182	201	210
FWR Input									
Temporal High	136	155	88	97	112	168	190	210	218
Temporal Medium	129	152	78	88	103	160	184	202	206
Temporal Low	129	151	76	86	101	160	184	194	201
Non-temporal High	142	161	103	112	126	181	203	221	229
Non-temporal Medium	134	155	85	95	110	166	189	208	216
Non-temporal Low	132	154	80	90	105	161	184	202	211

UL Max. Current Draw (mA RMS), 2-wire Horn/Strobe, High Candela Range (135–185 cd)

	16–33 Volts					16–33 Volts			
DC Input	135	150	177	185	FWR Input	135	150	177	185
Temporal High	245	259	290	297	Temporal High	215	231	258	265
Temporal Medium	235	253	288	297	Temporal Medium	209	224	250	258
Temporal Low	232	251	282	292	Temporal Low	207	221	248	256
Non-temporal High	255	270	303	309	Non-temporal High	233	248	275	281
Non-temporal Medium	242	259	293	299	Non-temporal Medium	219	232	262	267
Non-temporal Low	238	254	291	295	Non-temporal Low	214	229	256	262

Candela Derating

For K series products used at low temperatures, listed candela ratings must be reduced in accordance with this table.

Strobe Output (cd)

Listed Candela	Candela rating at –40°F
15	Do not use below 32°F
15/75	
30	
75	44
95	70
110	110
115	115
135	135
150	150
177	177
185	185

Horn Tones and Sound Output Data

Horn and Horn/Strobe Output (dBA)

			8–17.5 Volts		16–33 Volts		24 Volt Nominal			
							Reverberant		Anechoic	
Switch Position	Sound Pattern	dB	DC	FWR	DC	FWR	DC	FWR	DC	FWR
1	Temporal	High	78	78	84	84	88	88	99	98
2	Temporal	Medium	74	74	80	80	86	86	96	96
3	Temporal	Low	71	73	76	76	83	80	94	89
4	Non-temporal	High	82	82	88	88	93	92	100	100
5	Non-temporal	Medium	78	78	85	85	90	90	98	98
6	Non-temporal	Low	75	75	81	81	88	84	96	92
7†	Coded	High	82	82	88	88	93	92	101	101
8†	Coded	Medium	78	78	85	85	90	90	97	98
9†	Coded	Low	75	75	81	81	88	85	96	92

†Settings 7, 8, and 9 are not available on 2-wire horn/strobe.

SpectrAlert Advance Dimensions

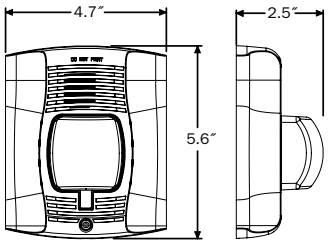

Wall-mount horn/strobes

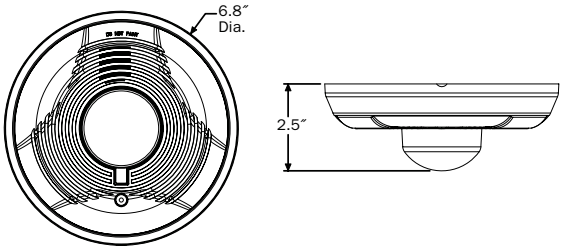

Ceiling-mount horn/strobes

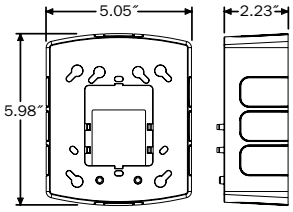

Wall back box skirt

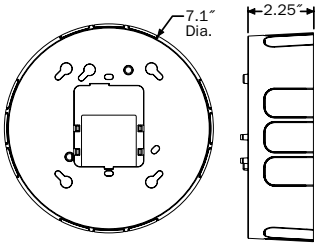

Ceiling back box skirt

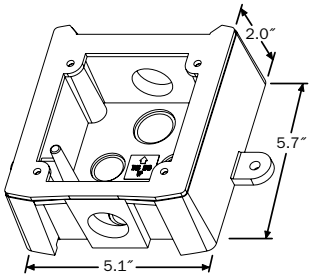

Wall weatherproof back box

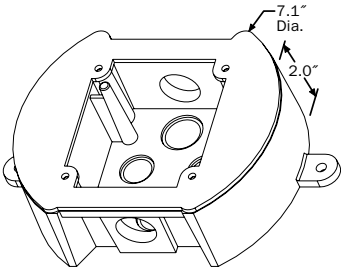

Ceiling weatherproof back box

SpectrAlert Advance Ordering Information

Model	Description
Wall Horn/Strobes	
P2R*†	2-wire Horn/Strobe, Standard cd‡, Red
P2RH*	2-wire Horn/Strobe, High cd, Red
P2RK*	2-wire Horn/Strobe, Standard cd, Red, Outdoor
P2RHK*	2-wire Horn/Strobe, High cd, Red, Outdoor
P2W*	2-wire Horn/Strobe, Standard cd, White
P2WH*	2-wire Horn/Strobe, High cd, White
P4R*	4-wire Horn/Strobe, Standard cd, Red
P4RH*	4-wire Horn/Strobe, High cd, Red
P4RK	4-wire Horn/Strobe, Standard cd, Red, Outdoor
P4RHK	4-wire Horn/Strobe, High cd, Red, Outdoor
P4W*	4-wire Horn/Strobe, Standard cd, White
P4WH*	4-wire Horn/Strobe, High cd, White
Wall Strobes	
SR*†	Strobe, Standard cd, Red
SRH*†	Strobe, High cd, Red
SRK	Strobe, Standard cd, Red, Outdoor
SRHK	Strobe, High cd, Red, Outdoor
SW*	Strobe, Standard cd, White
SWH*	Strobe, High cd, White
Ceiling Horn/Strobes	
PC2R*	2-wire Horn/Strobe, Standard cd, Red
PC2RH*	2-wire Horn/Strobe, High cd, Red
PC2RK	2-wire Horn/Strobe, Standard cd, Red, Outdoor
PC2RHK	2-wire Horn/Strobe, High cd, Red, Outdoor

Model	Description
Ceiling Horn/Strobes (cont'd.)	
PC2W*†	2-wire Horn/Strobe, Standard cd, White
PC2WH*†	2-wire Horn/Strobe, High cd, White
PC4R	4-wire Horn/Strobe, Standard cd, Red
PC4RH	4-wire Horn/Strobe, High cd, Red
PC4RK	4-wire Horn/Strobe, Standard cd, Red, Outdoor
PC4RHK	4-wire Horn/Strobe, High cd, Red, Outdoor
PC4W	4-wire Horn/Strobe, Standard cd, White
PC4WH	4-wire Horn/Strobe, High cd, White
Ceiling Strobes	
SCR*	Strobe, Standard cd, Red
SCRH*	Strobe, High cd, Red
SCRK	Strobe, Standard cd, Red, Outdoor
SCRHK	Strobe, High cd, Red, Outdoor
SCW*†	Strobe, Standard cd, White
SCWH*†	Strobe, High cd, White
Horns	
HR	Horn, Red
HRK	Horn, Red, Outdoor
HW	Horn, White
Accessories	
BBS-2	Back Box Skirt, Wall, Red
BBSW-2	Back Box Skirt, Wall, White
BBSC-2	Back Box Skirt, Ceiling, Red
BBSCW-2	Back Box Skirt, Ceiling, White

Notes:

* Add "-P" to model number for plain housing (no "FIRE" marking on cover), e.g., P2R-P

† Add "-SP" to model number for "FUEGO" marking on cover, e.g., P2R-SP

‡ "Standard cd," refers to strobes that include 15, 15/75, 30, 75, 95, 110, and 115 candela settings. "High cd," refers to strobes that include 135, 150, 177, and 185 candela settings.

All outdoor units ending in "K" include a weatherproof back box.

SYSTEM SENSOR®

3825 Ohio Avenue • St. Charles, IL 60174
Phone: 800-SENSOR2 • Fax: 630-377-6495

©2006 System Sensor.
Product specifications subject to change without notice. Visit systemsensor.com for current product information, including the latest version of this data sheet.

A05-0395-003 • 12/06 • #1676

Selectable Output Horns, Strobes, and Horn/Strobes

SpectrAlert® Advance selectable-output horns, strobes, and horn/strobes are rich with features guaranteed to cut installation times and maximize profits.

The SpectrAlert Advance series of notification appliances is designed to simplify installations, with features such as plug in designs, instant feedback messages to ensure correct installation of individual devices, and 11 field-selectable candela settings for wall and ceiling strobes and horn/strobes.

When installing Advance products, first attach a universal mounting plate to a four-inch square, four-inch octagon or double-gang junction box. The two-wire mounting plate attaches to a single-gang junction box.

Next, connect the notification appliance circuit wiring to the SEMS terminals on the mounting plate.

Finally, attach the horn, strobe or horn/strobe to the mounting plate by inserting the product's tabs in the mounting plate's grooves. The device will rotate into position, locking the product's pins into the mounting plate's terminals. The device will temporarily hold in place with a catch until it is secured with a captured mounting screw.

The SpectrAlert Advance series includes outdoor notification appliances. Outdoor strobes and horn/strobes (two wire and four wire) are available for wall or ceiling. Outdoor horns are available for wall only. All System Sensor outdoor products are rated between minus 40 degrees Fahrenheit and 151 degrees Fahrenheit in wet or dry applications.

Features

- Electrically compatible with existing SpectrAlert products
- Automatic selection of 12- or 24-volt operation at 15 and 15/75 candela
- Plug-in design
- Field selectable candela settings on wall and ceiling units: 15, 15/75, 30, 75, 95, 110, 115, 135, 150, 177, 185
- Same mounting plate for wall- and ceiling-mount units
- Shorting spring on mounting plate for continuity check before installation
- Tamper resistant construction
- Outdoor wall and ceiling products rated from –40°F to 151°F
- Design allows minimal intrusion into the back box
- Horn rated at 88+ dbA at 16 volts
- Rotary switch for horn tone and three volume selections
- Outdoor products UL listed to UL 1638 (strobe) and UL 464 (horn) outdoor requirements
- Outdoor products rainproof per UL 50 (NEMA 3R)
- Compatible with MDL sync module

Agency Listings

SIGNALING UL LISTED
S4011
S5512
S3593

FM APPROVED
3023572

MEA approved
MEA452-05-E

7125-1653:186 (indoor strobes)
7300-1653:187 (outdoor strobes)
7125-1653:188 (horn/strobes, chime/strobes)
7135-1653:189 (horns, chimes)

SpectrAlert Advance Specifications

Architect/Engineer Specifications

General

SpectrAlert Advance horns, strobes and horn/strobes shall mount to a standard 4 × 4 × 1½-inch back box, 4-inch octagon back box or double-gang back box. Two-wire products shall also mount to a single-gang 2 × 4 × 1⅞-inch back box. A universal mounting plate shall be used for mounting ceiling and wall products. The notification appliance circuit wiring shall terminate at the universal mounting plate. Also, SpectrAlert Advance products, when used with the Sync•Circuit™ Module accessory, shall be powered from a non-coded notification appliance circuit output and shall operate on a nominal 12 or 24 volts. When used with the Sync•Circuit Module, 12-volt rated notification appliance circuit outputs shall operate between nine and 17.5 volts; 24-volt rated notification appliance circuit outputs shall operate between 17 and 33 volts. Indoor SpectrAlert Advance products shall operate between 32 and 120 degrees Fahrenheit from a regulated DC, or full-wave rectified, unfiltered power supply. Strobes and horn/strobes shall have field-selectable candela settings including 15, 15/75, 30, 75, 95, 110, 115, 135, 150, 177, 185.

Strobe

The strobe shall be a System Sensor SpectrAlert Advance Model _____ listed to UL 1971 and shall be approved for fire protective service. The strobe shall be wired as a primary-signaling notification appliance and comply with the Americans with Disabilities Act requirements for visible signaling appliances, flashing at 1Hz over the strobe's entire operating voltage range. The strobe light shall consist of a xenon flash tube and associated lens/reflector system.

Horn/Strobe Combination

The horn/strobe shall be a System Sensor SpectrAlert Advance Model _____ listed to UL 1971 and UL 464 and shall be approved for fire protective service. The horn/strobe shall be wired as a primary-signaling notification appliance and comply with the Americans with Disabilities Act requirements for visible signaling appliances, flashing at 1Hz over the strobe's entire operating voltage range. The strobe light shall consist of a xenon flash tube and associated lens/reflector system. The horn shall have three audibility options and an option to switch between a temporal three-pattern and a non-temporal (continuous) pattern. These options are set by a multiple position switch. On four-wire products, the strobe shall be powered independently of the sounder. The horn on horn/strobe models shall operate on a coded or non-coded power supply.

Outdoor Products

SpectrAlert Advance outdoor horns, strobes and horn/strobes shall be listed for outdoor use by UL and shall operate between minus 40 degrees and 151 degrees Fahrenheit. The products shall be listed for use with a System Sensor outdoor/weatherproof back box with half inch and three-fourths inch conduit entries.

Synchronization Module

The module shall be a System Sensor Sync•Circuit model MDL listed to UL 464 and shall be approved for fire protective service. The module shall synchronize SpectrAlert strobes at 1Hz and horns at temporal three. Also, while operating the strobes, the module shall silence the horns on horn/strobe models over a single pair of wires. The module shall mount to a 4 11/16 × 4 11/16 × 2⅛-inch back box. The module shall also control two Style Y (class B) circuits or one Style Z (class A) circuit. The module shall synchronize multiple zones. Daisy chaining two or more synchronization modules together will synchronize all the zones they control. The module shall not operate on a coded power supply.

Physical/Electrical Specifications	
Standard Operating Temperature	32°F to 120°F (0°C to 49°C)
K Series Operating Temperature	–40°F to 151°F (–40°C to 66°C)
Humidity Range	10 to 93% non-condensing (indoor products)
Strobe Flash Rate	1 flash per second
Nominal Voltage	Regulated 12DC/FWR or regulated 24DC/FWR[1]
Operating Voltage Range[2]	8 to 17.5 V (12V nominal) or 16 to 33 V (24 nominal)
Input terminal wire gauge	12 to 18 AWG
Ceiling mount dimensions (including lens)	6.8″ diameter × 2.5″ high (173 mm diameter × 64 mm high)
Wall mount dimensions (including lens)	5.6″L × 4.7″W × 2.5″D (142 mm L × 119 mm W × 64 mm D)
Horn dimensions	5.6″L × 4.7″W × 1.3″D (142 mm L × 119 mm W × 33 mm D)
Wall-mount back box skirt dimensions (BBS-2, BBSW-2)	5.9″L × 5.0″W × 2.2″D (151 mm L × 128 mm W × 56 mm D)
Ceiling-mount back box skirt dimensions (BBSC-2, BBSCW-2)	7.1″ diameter × 2.25″ high (180 mm diameter × 57 mm high)
Wall-mount weatherproof back box dimensions (SA-WBB)	5.7″L × 5.1″W × 2.0″D (145 mm L × 130 mm W × 51 mm D)
Ceiling-mount weatherproof back box dimensions (SA-WBBC)	7.1″ diameter × 2.0″ high (180 mm diameter × 51 mm high)

Notes:

1. Full Wave Rectified (FWR) voltage is a non-regulated, time varying power source that is used on some power supply and panel outputs.
2. P, S, PC, and SC products will operate at 12 V nominal only for 15 and 15/75 cd.

UL Current Draw Data

UL Max. Strobe Current Draw (mA RMS)

		8–17.5 Volts		16–33 Volts	
	Candela	DC	FWR	DC	FWR
Standard Candela Range	15*	123	128	66	71
	15/75*	142	148	77	81
	30*	NA	NA	94	96
	75*	NA	NA	158	153
	95*	NA	NA	181	176
	110	NA	NA	202	195
	115	NA	NA	210	205
High Candela Range	135	NA	NA	228	207
	150	NA	NA	246	220
	177	NA	NA	281	251
	185	NA	NA	286	258

UL Max. Horn Current Draw (mA RMS)

		8–17.5 Volts		16–33 Volts	
Sound Pattern	dB	DC	FWR	DC	FWR
Temporal	High	57	55	69	75
Temporal	Medium	44	49	58	69
Temporal	Low	38	44	44	48
Non-temporal	High	57	56	69	75
Non-temporal	Medium	42	50	60	69
Non-temporal	Low	41	44	50	50
Coded	High	57	55	69	75
Coded	Medium	44	51	56	69
Coded	Low	40	46	52	50

UL Max. Current Draw (mA RMS), 2-wire Horn/Strobe, Standard Candela Range (15–115 cd)

	8–17.5 Volts		16–33 Volts						
DC Input	15	15/75	15	15/75	30	75	95	110	115
Temporal High	137	147	79	90	107	176	194	212	218
Temporal Medium	132	144	69	80	97	157	182	201	210
Temporal Low	132	143	66	77	93	154	179	198	207
Non-temporal High	141	152	91	100	116	176	201	221	229
Non-temporal Medium	133	145	75	85	102	163	187	207	216
Non-temporal Low	131	144	68	79	96	156	182	201	210
FWR Input									
Temporal High	136	155	88	97	112	168	190	210	218
Temporal Medium	129	152	78	88	103	160	184	202	206
Temporal Low	129	151	76	86	101	160	184	194	201
Non-temporal High	142	161	103	112	126	181	203	221	229
Non-temporal Medium	134	155	85	95	110	166	189	208	216
Non-temporal Low	132	154	80	90	105	161	184	202	211

UL Max. Current Draw (mA RMS), 2-wire Horn/Strobe, High Candela Range (135–185 cd)

	16–33 Volts					16–33 Volts			
DC Input	135	150	177	185	FWR Input	135	150	177	185
Temporal High	245	259	290	297	Temporal High	215	231	258	265
Temporal Medium	235	253	288	297	Temporal Medium	209	224	250	258
Temporal Low	232	251	282	292	Temporal Low	207	221	248	256
Non-temporal High	255	270	303	309	Non-temporal High	233	248	275	281
Non-temporal Medium	242	259	293	299	Non-temporal Medium	219	232	262	267
Non-temporal Low	238	254	291	295	Non-temporal Low	214	229	256	262

Candela Derating

For K series products used at low temperatures, listed candela ratings must be reduced in accordance with this table.

Strobe Output (cd)

Listed Candela	Candela rating at –40°F
15	Do not use below 32°F
15/75	
30	
75	44
95	70
110	110
115	115
135	135
150	150
177	177
185	185

Horn Tones and Sound Output Data

Horn and Horn/Strobe Output (dBA)

			8–17.5 Volts		16–33 Volts		24 Volt Nominal			
							Reverberant		Anechoic	
Switch Position	Sound Pattern	dB	DC	FWR	DC	FWR	DC	FWR	DC	FWR
1	Temporal	High	78	78	84	84	88	88	99	98
2	Temporal	Medium	74	74	80	80	86	86	96	96
3	Temporal	Low	71	73	76	76	83	80	94	89
4	Non-temporal	High	82	82	88	88	93	92	100	100
5	Non-temporal	Medium	78	78	85	85	90	90	98	98
6	Non-temporal	Low	75	75	81	81	88	84	96	92
7†	Coded	High	82	82	88	88	93	92	101	101
8†	Coded	Medium	78	78	85	85	90	90	97	98
9†	Coded	Low	75	75	81	81	88	85	96	92

†Settings 7, 8, and 9 are not available on 2-wire horn/strobe.

SpectrAlert Advance Dimensions

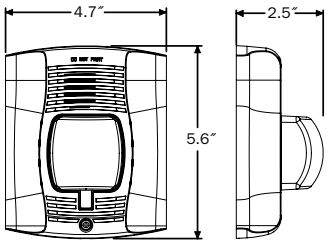

Wall-mount horn/strobes

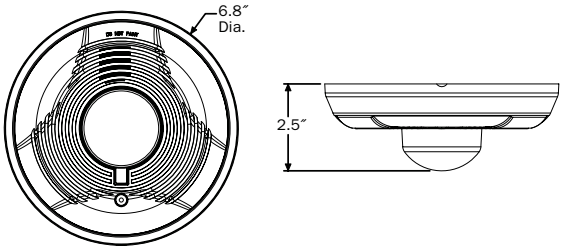

Ceiling-mount horn/strobes

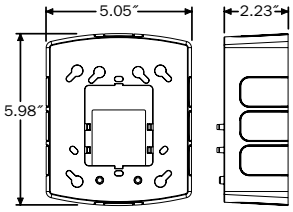

Wall back box skirt

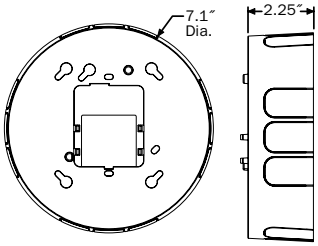

Ceiling back box skirt

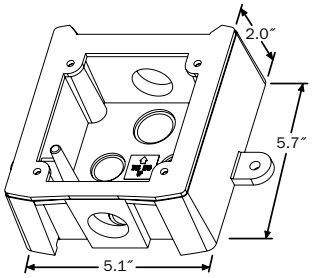

Wall weatherproof back box

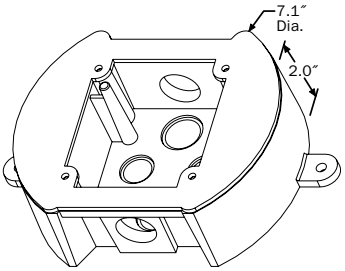

Ceiling weatherproof back box

SpectrAlert Advance Ordering Information

Model	Description
Wall Horn/Strobes	
P2R*†	2-wire Horn/Strobe, Standard cd‡, Red
P2RH*	2-wire Horn/Strobe, High cd, Red
P2RK*	2-wire Horn/Strobe, Standard cd, Red, Outdoor
P2RHK*	2-wire Horn/Strobe, High cd, Red, Outdoor
P2W*	2-wire Horn/Strobe, Standard cd, White
P2WH*	2-wire Horn/Strobe, High cd, White
P4R*	4-wire Horn/Strobe, Standard cd, Red
P4RH*	4-wire Horn/Strobe, High cd, Red
P4RK	4-wire Horn/Strobe, Standard cd, Red, Outdoor
P4RHK	4-wire Horn/Strobe, High cd, Red, Outdoor
P4W*	4-wire Horn/Strobe, Standard cd, White
P4WH*	4-wire Horn/Strobe, High cd, White
Wall Strobes	
SR*†	Strobe, Standard cd, Red
SRH*†	Strobe, High cd, Red
SRK	Strobe, Standard cd, Red, Outdoor
SRHK	Strobe, High cd, Red, Outdoor
SW*	Strobe, Standard cd, White
SWH*	Strobe, High cd, White
Ceiling Horn/Strobes	
PC2R*	2-wire Horn/Strobe, Standard cd, Red
PC2RH*	2-wire Horn/Strobe, High cd, Red
PC2RK	2-wire Horn/Strobe, Standard cd, Red, Outdoor
PC2RHK	2-wire Horn/Strobe, High cd, Red, Outdoor

Model	Description
Ceiling Horn/Strobes (cont'd.)	
PC2W*†	2-wire Horn/Strobe, Standard cd, White
PC2WH*†	2-wire Horn/Strobe, High cd, White
PC4R	4-wire Horn/Strobe, Standard cd, Red
PC4RH	4-wire Horn/Strobe, High cd, Red
PC4RK	4-wire Horn/Strobe, Standard cd, Red, Outdoor
PC4RHK	4-wire Horn/Strobe, High cd, Red, Outdoor
PC4W	4-wire Horn/Strobe, Standard cd, White
PC4WH	4-wire Horn/Strobe, High cd, White
Ceiling Strobes	
SCR*	Strobe, Standard cd, Red
SCRH*	Strobe, High cd, Red
SCRK	Strobe, Standard cd, Red, Outdoor
SCRHK	Strobe, High cd, Red, Outdoor
SCW*†	Strobe, Standard cd, White
SCWH*†	Strobe, High cd, White
Horns	
HR	Horn, Red
HRK	Horn, Red, Outdoor
HW	Horn, White
Accessories	
BBS-2	Back Box Skirt, Wall, Red
BBSW-2	Back Box Skirt, Wall, White
BBSC-2	Back Box Skirt, Ceiling, Red
BBSCW-2	Back Box Skirt, Ceiling, White

Notes:

* Add "-P" to model number for plain housing (no "FIRE" marking on cover), e.g., P2R-P

† Add "-SP" to model number for "FUEGO" marking on cover, e.g., P2R-SP

‡ "Standard cd," refers to strobes that include 15, 15/75, 30, 75, 95, 110, and 115 candela settings. "High cd," refers to strobes that include 135, 150, 177, and 185 candela settings.

All outdoor units ending in "K" include a weatherproof back box.

SYSTEM SENSOR®

3825 Ohio Avenue • St. Charles, IL 60174
Phone: 800-SENSOR2 • Fax: 630-377-6495

©2006 System Sensor.
Product specifications subject to change without notice. Visit systemsensor.com for current product information, including the latest version of this data sheet.

A05-0395-003 • 12/06 • #1676

SPECIFICATIONS/DATA

11" x 18" PG Style (Stackable) Assembly

Covers (Blank unless logo is specified)

DESCRIPTION	PART NO.	WEIGHT #	DESIGN/TEST LOAD #	ANSI TIER*
W/2 Bolts	PG1118CA00	27 (12.2 kg)	8,000 / 12,000	8
Gasketed w/2 Bolts	PG1118CG00	27 (12.2 kg)	8,000 / 12,000	8
No Bolts	PG1118WA00	27 (12.2 kg)	8,000 / 12,000	8
Heavy Duty w/2 Bolts	PG1118HA00	27 (12.2 kg)	15,000 / 22,500	15
Gasketed Heavy Duty w/2 Bolts	PG1118HG00	27 (12.2 kg)	15,000 / 22,500	15
Extra Heavy Duty w/2 Bolts	PG1118HH00	27 (12.2 kg)	22,500 / 33,750	22

- Covers with meter lids available upon request. See page 12 or page 56 for meter lid cover load rating explanation.
- Gasketed covers and bolt grommets must be used with a gasketed box. Gaskets reduce the inflow of fluids but do not make the enclosure water tight.

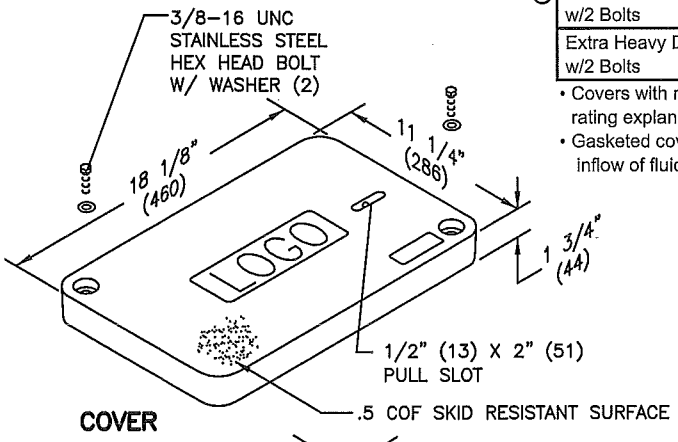

COVER

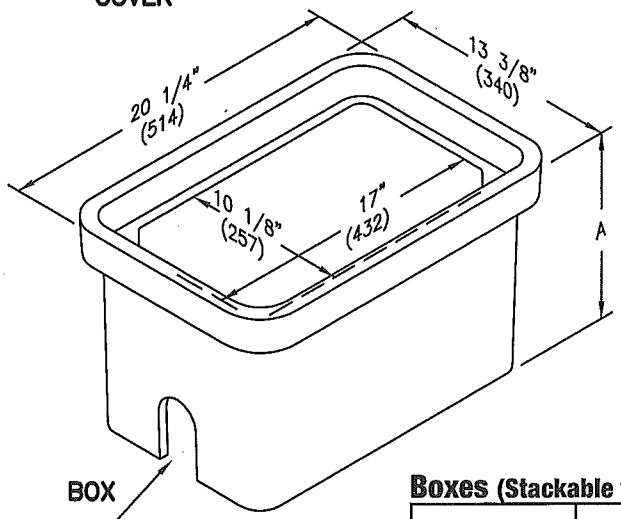

BOX

2X 2 1/2" (64) X 4" (102) MOUSEHOLES (PG1118BB only)

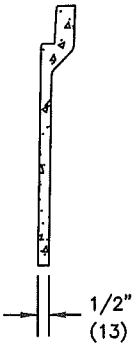

Boxes (Stackable with self-aligning, replaceable EZ-Nut)

DESCRIPTION	PART NO.	WEIGHT #	DIMENSION A	DESIGN/TEST LOAD #	ANSI TIER*
Open Bottom	PG1118BA12	40 (18 kg)	12" (305 mm)	22,500 / 33,750	22
	PG1118BA18	53 (24 kg)	18" (457 mm)	22,500 / 33,750	22
Open Bottom w/ Gasket	PG1118BG12	40 (18 kg)	12" (305 mm)	22,500 / 33,750	22
	PG1118BG18	53 (24 kg)	18" (457 mm)	22,500 / 33,750	22
Open Bottom w/ 2 Mouseholes	PG1118BB12	40 (18 kg)	12" (305 mm)	22,500 / 33,750	22
	PG1118BB18	53 (24 kg)	18" (457 mm)	22,500 / 33,750	22
Solid Bottom	PG1118DA12	43 (19.5 kg)	12 1/2" (318 mm)	22,500 / 33,750	22
	PG1118DA18	60 (27 kg)	18 1/2" (470 mm)	22,500 / 33,750	22
Solid Bottom w/ Gasket	PG1118DG12	43 (19.5 kg)	12 1/2" (318 mm)	22,500 / 33,750	22
	PG1118DG18	60 (27 kg)	18 1/2" (470 mm)	22,500 / 33,750	22
Footed Box	PG1118JA12	41 (19 kg)	12 1/2" (318 mm)	22,500 / 33,750	22
	PG1118JA18	55 (25 kg)	18 1/2" (470 mm)	22,500 / 33,750	22

Dimensions & weights in parentheses are metric equivalent.
* Loadings comply with ANSI/SCTE 77 (see page 9).

WIREMOLD

legrand®

880MP
Nonmetallic Floor Boxes

The Modulink 880MP Nonmetallic Floor Box

The new Modulink Nonmetallic Floor Box from Walker Systems provides power and communication services directly to the workstation or to any open space location. The Modulink Floor Box is a gangable box that allows a one-gang floor box to easily be turned into a two- or three-gang box simply by ganging together individual boxes. This floor box has many applications, some of which are commercial offices, retail stores, malls, financial and government institutions.

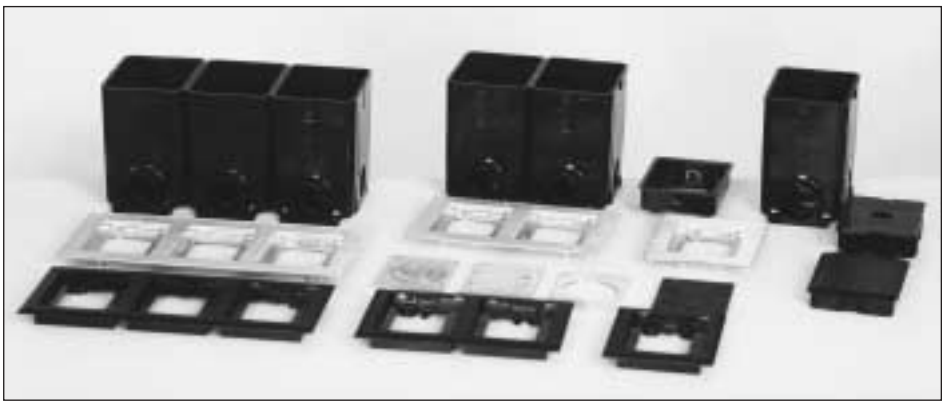

The Modulink Nonmetallic Floor Box is a gangable box that can easily be turned into three boxes.

Features & Benefits

- **TopGuard protection.** Activation covers for the 880MP PVC box are TopGuard protected. These cover assemblies keep out water, dirt, and debris from the power and communication compartments.
- **Multiple service capability.** Eliminates the cost of a separate floor box and cover to accommodate communication service.
- **Depth markings on exterior of the box.** Makes floor box depth calculations quick and easy. Reduces installation time and labor costs.
- **1 1/4" [32mm] conduit openings.** Provides the largest conduit feed in the industry. Meets customer requirements for greater communication cable capacity.
- **Ratchet adjusting ring.** Allows connection of cover flange without glue or mechanical fasteners. Reduces installation time and cost by providing 10° of post-pour adjustment of the cover flange.
- **Conduit reducers and plugs provided.** Allows direct reduction from 1 1/4" [32mm] conduit to 1", 3/4" or 1/2" [25mm,19.1mm, or 12.7mm] conduit. Reduces installation time by providing direct reduction and separate plugs by eliminating the need to cut out plugs to form reducers.
- **New brushed aluminum covers for power applications.** NEW! 830CK Series Aluminum Covers have been redesigned to now accept threaded conduit when passing through power cables.
- **New brass and brushed aluminum covers to accept single locking power receptacles.** NEW! New 828DLR Series provides single flip lid cover.
- **New 828COMTC Series Cover Kit in brass and brushed aluminum.** NEW! Allows communication devices to be recessed into 880W Series Boxes.
- **Cubic inch markings on the interior of the box.** No need to calculate cubic inch capacity for wire fill, saving installation time.
- **Ratchet adjusting ring has built-in fiber storage.** Provides bend radius control for fiber optic cables.
- **Pass-through capability.** Can feed multiple gangs from a single cable feed location. Reduces total installation time.
- **Modular design and gangability.** One SKU to order boxes with the ability to configure boxes as needed on the job site.
- **Internal spacer.** Protects box from deformation of the sidewalls when high temperature additives are used in the concrete pour.
- **Redesigned mudcap.** High impact mudcap protects the box from damage when heavy equipment such as scissor lift trucks come in contact with the box during installation.
- **Datacom connectivity options.** Accepts industry standard and proprietary devices from a wide range of manufacturers to provide a seamless and aesthetically pleasing interface for voice, data, audio, and video applications at the point-of-use. A wide selection of data and bezel options available for use with Ortronics® TracJack™ and Series II devices.
- **Boxes and covers have been listed by Underwriters Laboratories Inc. to their standard UL514A, 514C, 514D, and Canadian standard C22.2.**

880MP Floor Box Ordering Information

Catalog No./Item	Description/Specifications
880MP 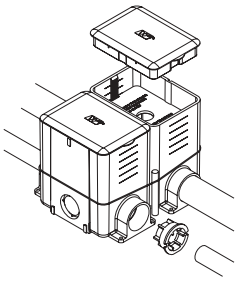	**Nonmetallic Rectangular Floor Box** – Box comes complete with reusable mudcap, insert spacer, conduit plugs and reducers. Reducers provided for reduction to 1", 3/4", and 1/2" [25mm, 19.1mm, and 12.7mm] conduit. Minimum concrete depth is 3 1/2" [89mm] and maximum concrete depth is 6" [152mm]. Minimum capacity is 50 cu. in. [819ml] and maximum capacity is 100 cu. in. [1639ml]. Box dimensions are 4 1/8" W x 5 1/2" L x 6" [105mm x 140mm x 152mm].

NOTE: *Insert spacer should not be removed until after concrete pour.*

Catalog No./Item	Description/Specifications
880MPA 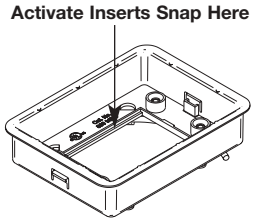	**Nonmetallic Floor Box Adjusting Ring** – Comes with fiber storage loop. Also includes brass inserts for flange connection and green ground wire for ground connection. Activate modular inserts snap directly into the adjusting ring without the need for a bezel. Also includes mounting screws to attach flange to box body. Ortronics connectivity inserts do not snap directly into the adjusting ring. For Ortronics inserts use the 828GFITC or 829PFLRT.

NOTE: *One 880MPA is needed for each 880MP used. For example, a three-gang box will require three 880MPA Adjusting Rings.*

Brass & Brushed Aluminum Floor Box Cover Plate Flanges

Catalog No./Item	Description/Specifications
817B **818TCAL** 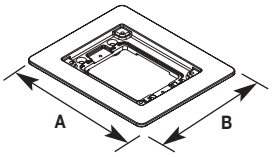	**One-Gang Brass or Brushed Aluminum Combination Carpet and Tile Flange** – • Accepts Ortronics MAB6TJ TracJack and MAB3S2 Series II bezels, sold separately. • Accepts the Activate CM-MAB bezel, sold separately. • Wiremold open inserts, sold separately.

FLANGE	A Inches	A [mm]	B Inches	B [mm]
817B	6.080	[154.4]	5.060	[128.5]
818TCAL	5.940	[150.9]	4.920	[124.9]

NOTE: *Brushed aluminum flanges come with beveled edges.*

Catalog No./Item	Description/Specifications
827B **828TCAL** 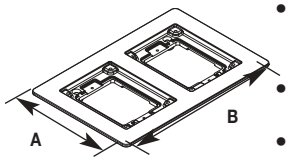	**Two-Gang Brass or Brushed Aluminum Combination Carpet and Tile Flange** – • Accepts Ortronics MAB6TJ TracJack and MAB3S2 Series II bezels, sold separately. • Accepts the Activate CM-MAB bezel, sold separately. • Wiremold open inserts, sold separately.

FLANGE	A Inches	A [mm]	B Inches	B [mm]
827B	6.080	[154.4]	9.185	[233.2]
828TCAL	5.940	[150.9]	9.045	[229.7]

NOTE: *Brushed aluminum flanges come with beveled edges.*

NOTE: *Brass covers and flanges are **not** interchangeable with aluminum or nonmetallic covers and flanges. Nonmetallic covers **are** interchangeable with aluminum flanges.*

Catalog No./Item	Description/Specifications
837B **838TCAL** 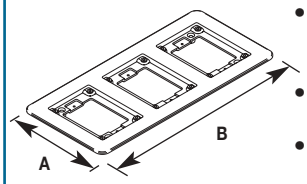	**Three-Gang Brass or Brushed Aluminum Combination Carpet and Tile Flange** – • Accepts Ortronics MAB6TJ TracJack and MAB3S2 Series II bezels, sold separately. • Accepts the Activate CM-MAB bezel, sold separately. • Wiremold open inserts, sold separately.

FLANGE	A Inches	A [mm]	B Inches	B [mm]
837B	6.080	[154.4]	13.310	[338.1]
838TCAL	5.940	[150.9]	13.170	[334.5]

NOTE: *Brushed aluminum flanges come with beveled edges.*

Nonmetallic Floor Box Cover Plate Flanges

Catalog No./Item	Description/Specifications
817PCC-BLK **817PCC-BRN** 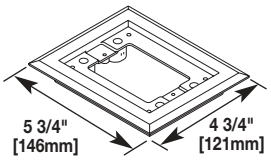	**One-Gang Nonmetallic Carpet and Tile Flange** – Available in black or brown. • Accepts Ortronics MAB6TJ TracJack and MAB3S2 Series II bezels, sold separately. • Accepts the Activate CM-MAB bezel, sold separately. • Wiremold open inserts, sold separately.
827PCC-BLK **827PCC-BRN** 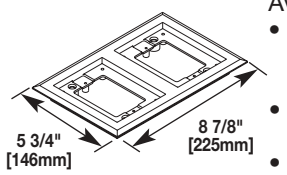	**Two-Gang Nonmetallic Carpet and Tile Flange** – Available in black or brown. • Accepts Ortronics MAB6TJ TracJack and MAB3S2 Series II bezels, sold separately. • Accepts the Activate CM-MAB bezel, sold separately. • Wiremold open inserts, sold separately.

Catalog No./Item	Description/Specifications
837PCC-BLK **837PCC-BRN** 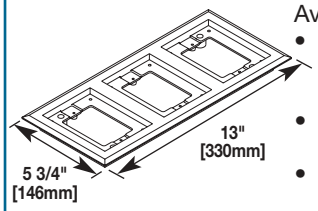	**Three-Gang Nonmetallic Carpet and Tile Flange** – Available in black or brown. • Accepts Ortronics MAB6TJ TracJack and MAB3S2 Series II bezels, sold separately. • Accepts the Activate CM-MAB bezel, sold separately. • Wiremold open inserts, sold separately.

NOTE: *Brass and aluminum covers and flanges are **not** interchangeable, however, nonmetallic and aluminum covers and flanges **are** interchangeable.*

Walker Floor Box Cover Plates

Catalog No./Item	Description/Specifications
828R **828R-TCAL** 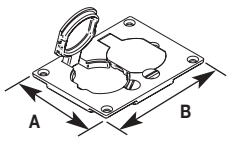	**Brass or Brushed Aluminum Duplex Cover Plate** – Flip lids. Can also be used with a 106 type communication bezel.

COVER	A Inches	A [mm]	B Inches	B [mm]
828R	3.156	[80.2]	4.182	[106.2]
828R-TCAL	3.290	[83.6]	4.310	[109.5]

Catalog No./Item	Description/Specifications
828GFITC **828GFITCAL** 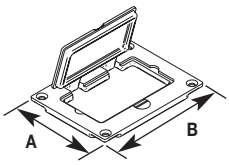	**Brass or Brushed Aluminum GFI Cover Plate** – May be used with Activate and Ortronics Connectivity Systems in conjunction with 817B, 827B, and 837B Flanges.

COVER	A Inches	A [mm]	B Inches	B [mm]
828GFITC	3.156	[80.2]	4.182	[106.2]
828GFITCAL	3.290	[83.6]	4.310	[109.5]

Catalog No./Item	Description/Specifications
828DPGFITC **828DPGFITCAL** 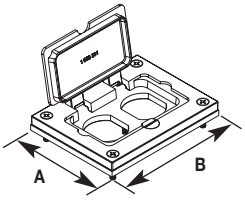	**Brass or Brushed Aluminum Rectangular Cover Plate** – Allows for mounting of a duplex style receptacle with a rectangular style flip lid cover.

COVER	A Inches	A [mm]	B Inches	B [mm]
828DPGFITC	3.156	[80.2]	4.182	[106.2]
828DPGFITCAL	3.290	[83.6]	4.310	[109.5]

Catalog No./Item	Description/Specifications
828COMTC **828COMTCAL** 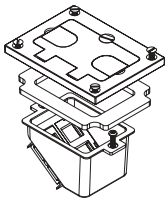	**Brass or Brushed Aluminum Communication Cover Plate** – Allows for up to four communication devices to be mounted in a recessed position within the 880MP Floor Box. The 828COM Cover Plate has removable slides for cable egress.

COVER	A Inches	A [mm]	B Inches	B [mm]
828COMTC	3.156	[80.2]	4.182	[106.2]
828COMTCAL	3.290	[83.6]	4.310	[109.5]

NOTE: *Brass covers and flanges are **not** interchangeable with aluminum or nonmetallic covers and flanges. Nonmetallic covers **are** interchangeable with aluminum flanges.*

Walker Floor Box Cover Plates (continued)

Catalog No./Item	Description/Specifications
828DLR **828DLRAL** 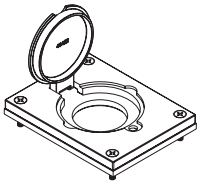	NEW! **Brass or Brushed Aluminum Single Locking Receptacle Cover Plate** – Single flip lid cover for 20A or 30A single locking receptacles. Device opening is 2 5/8" [67mm]. For use with maximum female locking device of 1.58" diameter, and maximum male plug face of 2.25" diameter
830CKTCLAL 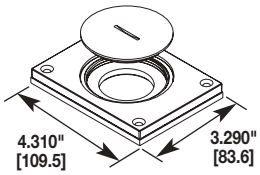	NEW! **Brushed Aluminum Single Locking Receptacle Cover Plate** – Single screw plug cover for 20A or 30A single locking receptacles. Screw plug opening is 2 5/8" [67mm]. For use with maximum female locking device of 1.58" diameter, and maximum male plug face of 2.25" diameter. ***NOTE:*** *Acceptable for use with threaded conduit when passing through power cables.*
828SPTC 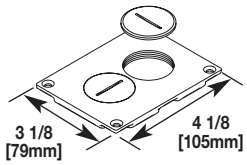	**Brass Duplex Cover Plate** – Screw plugs. Screw plugs are 1 1/2" [38mm] in diameter. ***NOTE:*** *Not available in Brushed Aluminum finish.*
829STC 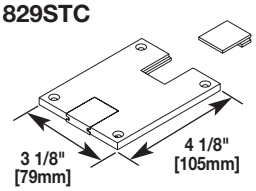	**Brass Communication Cover Plate** – Data slides. Feed through only, not for use with a mounting plate for communication jacks. ***NOTE:*** *Not available in Brushed Aluminum finish.*
829CK 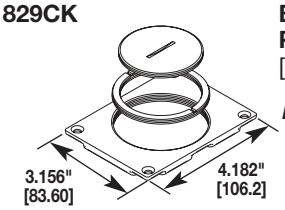	**Brass Communication Cover Plate** – 2 5/8" and 2 1/4" [67mm and 57mm] plugs. ***NOTE:*** *Not for use with threaded conduit.*
830CKTCAL 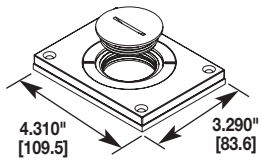	NEW! **Brushed Aluminum Cover Plate** – Power or communication plate with 2" [51mm] and 1 1/4" [32mm] plugs. ***NOTE:*** *Acceptable for use with threaded conduit when passing through power cables.*

Catalog No./Item	Description/Specifications
829CK-1 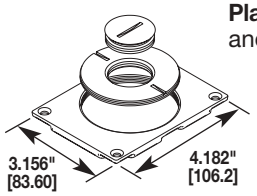	**Brass Communication Cover Plate** – 2 5/8" and 1" [67mm and 25mm] plugs. ***NOTE:*** *Not for use with threaded conduit.*
829CK-3/4 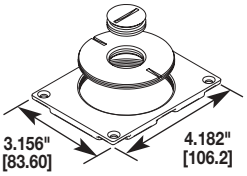	**Brass Communication Cover Plate** – 2 5/8" and 3/4" [67mm and 19.1mm] plugs. ***NOTE:*** *Not for use with threaded conduit.*
830CKTCAL-3/4 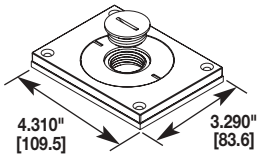	NEW! **Brushed Aluminum Cover Plate** – Power or communication plate with 2" [51mm] and 3/4" [19.1mm] plugs. ***NOTE:*** *Acceptable for use with threaded conduit when passing through power cables.*
829CK-1/2 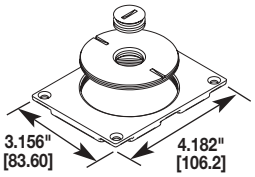	**Brass Communication Cover Plate** – 2 5/8" [67mm] and 1/2" [12.7mm] plugs. ***NOTE:*** *Not for use with threaded conduit.*
830CKTCAL-1/2 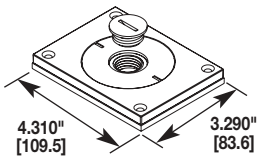	NEW! **Brushed Aluminum Cover Plate** – Power or communication plate with 2" [51mm] and 1/2" [12.7mm] plugs. ***NOTE:*** *Acceptable for use with threaded conduit when passing through power cables.*
828PR-BLK **828PR-BRN** 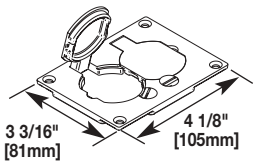	**Nonmetallic Duplex Cover Plate** – Flip lids. Available in black or brown. Can also be used with a 106 type communication bezel.

**Replacement flip lids can be ordered under Cat. No. PFL-BLK and PFL-BRN. Each Cat. No. comes with three flip lids. The above cover plates are listed for tile and carpet applications.*

NOTE: *Brass covers and flanges are **not** interchangeable with aluminum or nonmetallic covers and flanges. Nonmetallic covers and flanges **are** interchangeable with aluminum covers and flanges.*

Walker Floor Box Cover Plates (continued)

Catalog No./Item	Description/Specifications
828PRGFI-BLK **828PRGFI-BRN** 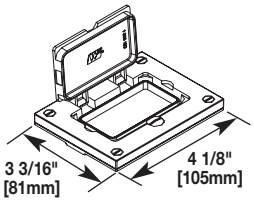	**Nonmetallic GFI Cover Plate** – Available in black or brown. May be used with Activate and Ortronics Connectivity systems in conjunction with 817, 827 and 837PCC Series flanges.
829PFL-BLK **829PFL-BRN** 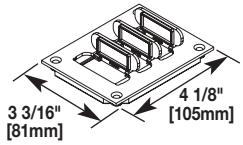	**Nonmetallic Communication Cover Plate** – Individual flip lids.* Available in black or brown. Gasket and bezel included. • Activate, CM-MAB bezels. • Wiremold open inserts.
829PFLRT-BLK **829PFLRT-BRN** 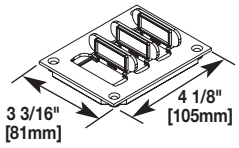	**Nonmetallic Communication Cover Plate** – Individual flip lids.* Available in black or brown. Gasket included. • Ortronics MAB6TJ TracJack and MAB3S2 Series II bezels included.

Catalog No./Item	Description/Specifications
829PCK-BLK **829PCK-BRN** 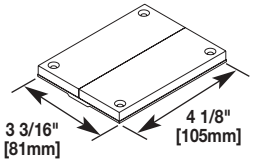	**Nonmetallic Communication Cover Plate** – Breakouts. Available in black or brown. Feed through only, not for use with a mounting plate for communication jacks.
829PSTC-BLK **829PSTC-BRN** 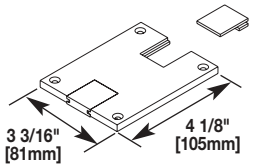	**Nonmetallic Communication Cover Plate** – Data slides. Available in black or brown. Feed through only, not for use with a mounting plate for communication jacks.

** Replacement flip lids can be ordered under Cat. No. PFL-BLK and PFL-BRN. Each Cat. No. comes with three flip lids. The above cover plates are listed for tile and carpet applications.*

NOTE: *Brass covers and flanges are **not** interchangeable with aluminum or nonmetallic covers and flanges.*
*Nonmetallic covers and flanges **are** interchangeable with aluminum covers and flanges.*

Mounting Options for Connectivity Inserts

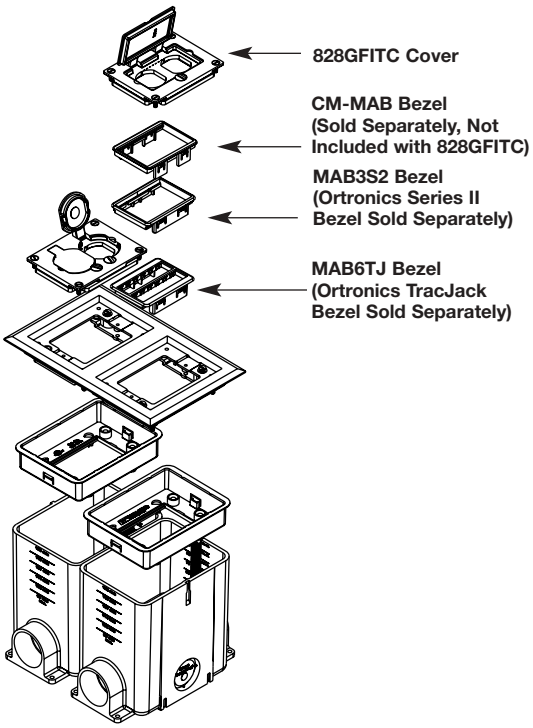

Flush installation with Activate installed using the Activate bezel, or Ortronics installed using the Ortronics bezels.

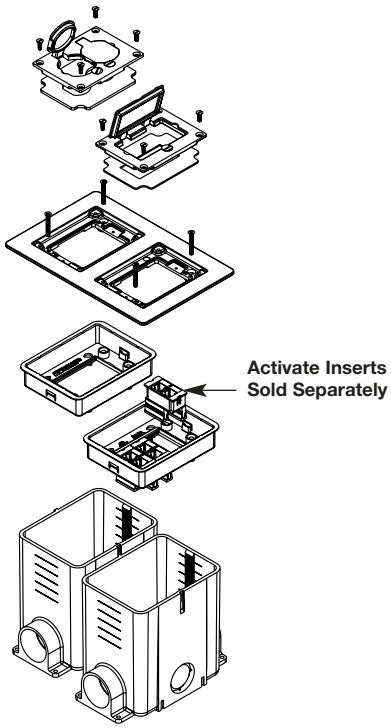

Recessed installation with Activate installed directly into the 880MPA Adjusting Ring. *Ortronics inserts cannot be inserted directly into 880MPA, see* below for Ortronics solution.

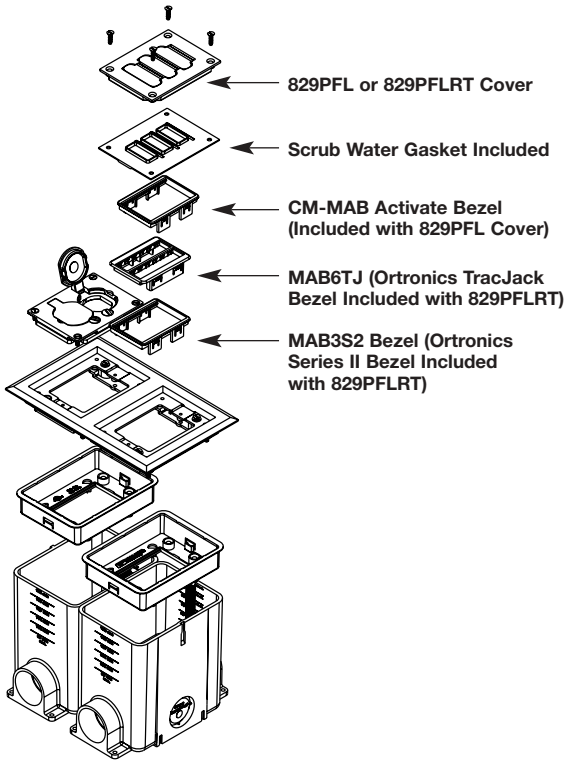

Flush installation with Ortronics installed using 829PFLRT Cover or Activate installed using 829PFL Cover.

NOTE: *Part is approved for scrub water applications only with inserts in the flush position.*

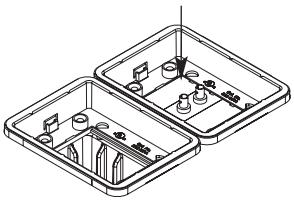

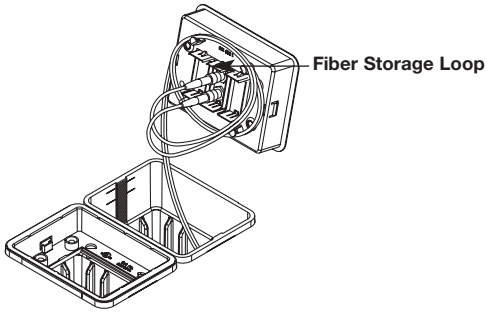

Fiber Optic Installation (Activate Only).

Notes

Datacom Connectivity Options

Now you have a wide range of options for providing datacom connectivity into Wiremold® Cable Management Systems. They are:

- **Ortronics® TracJack® and Series II Modular Connectivity Solutions**
- **Pass & Seymour Activate™ Modular Inserts**
- **Open System Communication Modules**

Use these icons to determine connectivity options for each Wiremold System component:

ORT | P&S | OPEN

ORT | P&S | OPEN

ORT | P&S | OPEN

ORT
P&S
OPEN

Ortronics® Connectivity

TracJack® Individual Jack System

- Front-loading, snap-in design supports future moves adds and changes
- Inserts for voice, data, audio, and video
- Available Category 3, 5e, 6, USOC 6-position, and other media
- Choice of 13 colors and color matched to Wiremold Systems
- Universal T568A/B wiring format

Series II Front-Loading, Module System

- Module design features easy snap-in front-loading design
- Linear 110 punch down format for easy termination
- Inserts for voice, data, audio, and video
- Available Category 3, 5e, 6, USOC 6-position, and other media
- Color matched to Wiremold Systems

For detailed product selection refer to the Ortronics Catalog or visit www.ortronics.com.

ORT
P&S
OPEN

Pass & Seymour Legrand Network Wiring

Activate™ Series Front-Loading Inserts

- Modular inserts for voice, data, audio and video applications
- Front-load, snap-in design
- Color and texture matched to Wiremold Systems
- Available Category 3, 5e, 6, as well as 6-position USOC
- Universal T568A/B wiring format

For detailed product selection refer to the Pass & Seymour Network Wiring Catalog or visit www.passandseymour.com.

ORT
P&S
OPEN

Open Connectivity Solutions

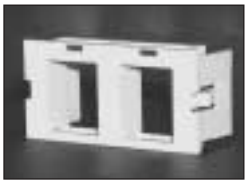

Wiremold Open System Communications Modules

- Accommodate a wide range of manufacturers' communications outlets including keystone jacks, as well as proprietary solutions from Avaya (Systimax) and NORDX
- Modules insert into a wide range of Wiremold Systems
- Pre-punched faceplates accept common communication devices

NOTE: For more information on integrating connectivity into Wiremold Cable Management Systems contact the Wiremold Applications Engineering Team or your local Wiremold Sales Representative.

WIREMOLD

legrand®

Wiremold / Legrand
U.S. and International:
60 Woodlawn Street • West Hartford, CT 06110
1-800-621-0049 • FAX 860-232-2062 • Outside U.S. 860-233-6251
Canada:
570 Applewood Crescent • Vaughan, Ontario L4K 4B4
1-800-723-5175 • FAX 905-738-9721

© Copyright 2007 Wiremold / Legrand All Rights Reserved

ED923R6 – Updated June 2007 – For latest specs visit www.wiremold.com

DESCRIPTION

High efficacy low profile track fixture ideal for accent and display lighting applications. Featuring die cast construction with a simple low profile design. These lampholders are perfect for those applications where performance is required from a discreet source.

Catalog #		Type
Project	GREATER	
Comments		Date
Prepared by		

SPECIFICATION FEATURES

Quick Lock Adapter
Attaches electrically and mechanically anywhere along the track. Includes discrete locking tab that locks the luminaire on the track and allows for easy removal and repositioning.

Driver Housing
Die-cast and extruded aluminum housing incorporates the lamp control circuit.

Heat Sink
Aluminum die-cast heat sink provides exceptional thermal management to yield 70% lumen maintenance after 50,000 hours of operation.

Luminaire Arm
Arm allows the lamp housing tilt to adjust +/- 90° horizontally. This enables the ballast housing to remain static on the track creating a clean look while providing full aiming capabilities.

LED Light Engine
Equipped with (9) 3-Watt white LEDs. Configurable optic allows for 3 optical distributions and can be changed in the field to adjust to the current lighting need. CRI of 85.

Compliance
UL/cUL listed for use with Halo Power-Trac and Lazer Track. UL/cUL classified for Juno [See Footnote #1 in Ordering Information below], Lightolier [See Footnote #2 below], and Global [See Footnote #3 below] TEK/HTEK Track.
DesignLights™ Consortium Qualified. Refer to www.designlights.org Qualified Products List for details.

L806

L807

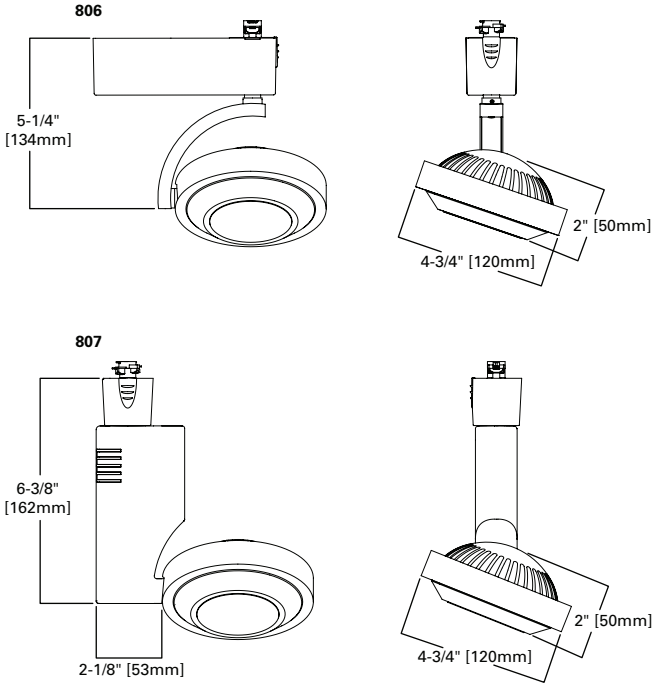

L806
L807
Halo LED

18W

DESIGNLIGHTS CONSORTIUM

3000 K	CBCP
Spot 15˚	11,057
Narrow Flood 22˚	8990
Flood 37˚	2480

Lighting Data
3000 K Spot

Lumens:	1253
Lumens per watt:	70.8
Watts at 120VAC	17.71

Energy Data:

Input Power: 17.71W
Power Factor: >.9
Input Current: .149 Amps

ORDERING INFORMATION

SAMPLE NUMBER: L806SP830AH (Halo or Lazer Track connector, Spot Distribution, 3000 K, with Aluminum Haze Finish)

Track	LED	Beam	CRI	CCT	Finish	Voltage
L=Halo and Lazer Power-Trac **LJ**=Juno® Track[1] **LL**=Lightolier® Track[2] **L2G**=Global® TEK or HTEK[3]	**806**=806 **807**=807	**FL**=Flood 37° **NF**=Narrow Flood 22° **SP**=Spot 15°	**80**=85	**30**=3000 K **40**=4000 K	**AH**=Aluminum Haze **MB**=Black **P**=White	**277**=277 VAC (Only with HTEK) **[Blank]**=120V

NOTES: 1. Juno® T single circuit and 2-circuit track contact. Juno® is a registered trademark of Juno® Lighting. **2.** Lightolier® Lyfespan 6000 single circuit and 2 circuit track contact. Lightolier® is a registered trademark of Philips Lighting. **3.** Global® is a registered trademark of Nordic Aluminum.

DesignLights™ Consortium Qualified. Refer to www.designlights.org Qualified Products List under Family Models for details.

PHOTOMETRICS

Color Temp = 3000K
4000K Multiplier = 1.25

0 deg Aiming Angle Horizontal Footcandles

	D	FC	L	W
Wide Spot: 15°	5	442	1.4	1.4
CBCP: 11057	7.5	197	2	2
Lumens: 1253	10	111	2.7	2.7
LpW: 70.8	12.5	71	3.4	3.4
	15	49	4.1	4.1
Narrow Flood: 22°	5	360	1.7	1.7
CBCP: 8990	7.5	160	2.5	2.5
Lumens: 1289	10	90	3.3	3.3
LpW: 72.4	12.5	58	4.2	4.2
	15	40	5	5
Flood: 37°	5	99	3.2	3.2
CBCP: 2480	7.5	44	4.8	4.8
Lumens: 1228	10	25	6.4	6.4
LpW: 69	12.5	16	8	8
	15	11	9.6	9.6

30 deg Aiming Angle Horizontal Footcandles

	D	FC	L	W	CB
Wide Spot: 15°	5	287	1.7	1.5	2.9
CBCP: 11057	7.5	128	2.6	2.3	4.3
Lumens: 1253	10	72	3.5	3.1	5.8
LpW: 70.8	12.5	46	4.3	3.8	7.2
	15	32	5.2	4.6	8.7
Narrow Flood: 22°	5	234	2.2	1.9	2.9
CBCP: 8990	7.5	104	3.3	2.8	4.3
Lumens: 1289	10	58	4.3	3.8	5.8
LpW: 72.4	12.5	37	5.4	4.7	7.2
	15	26	6.5	5.7	8.7
Flood: 37°	5	72	3.6	3.4	2.9
CBCP: 2480	7.5	32	5.5	5.2	4.3
Lumens: 1228	10	18	7.3	6.9	5.8
LpW: 69	12.5	12	9.1	8.6	7.2
	15	8	10.9	10.3	8.7

30 deg Aiming Angle Vertical Footcandles on Wall

	D	FC	L	W	CB
Wide Spot: 15°	3	180	2.6	1.5	5.2
CBCP: 11057	4	101	3.4	1.9	6.9
Lumens: 1253	5	65	4.3	2.4	8.7
LpW: 70.8	6	45	5.1	2.9	10.4
Narrow Flood: 22°	3	158	2.9	1.7	5.2
CBCP: 8990	4	89	3.9	2.3	6.9
Lumens: 1289	5	57	4.9	2.9	8.7
LpW: 72.4	6	40	5.8	3.5	10.4
Flood: 37°	3	67	3.2	2.7	5.2
CBCP: 2480	4	38	4.3	3.6	6.9
Lumens: 1228	5	24	5.4	4.5	8.7
LpW: 69	6	17	6.5	5.4	10.4

60 deg Aiming Angle Vertical Footcandles on Wall

	D	FC	L	W	CB
Wide Spot: 15°	3	798	1	0.9	1.7
CBCP: 11057	4	449	1.4	1.2	2.3
Lumens: 1253	5	287	1.7	1.5	2.9
LpW: 70.8	6	199	2.1	1.8	3.5
Narrow Flood: 22°	3	649	1.3	1.1	1.7
CBCP: 8990	4	365	1.7	1.5	2.3
Lumens: 1289	5	234	2.2	1.9	2.9
LpW: 72.4	6	162	2.6	2.3	3.5
Flood: 37°	3	201	2.2	2.1	1.7
CBCP: 2480	4	113	2.9	2.8	2.3
Lumens: 1228	5	72	3.6	3.4	2.9
LpW: 69	6	50	4.4	4.1	3.5

Notes and Definitions:
Beam spread is to 50% center beam candlepower (CBCP.)
D=Distance in feet to floor or wall.
FC=Footcandles on floor or wall at center beam aiming location.
L =Effective Visual Beam length in feet (50% of maximum footcandle level.)
W=Effective Visual Beam width in feet (50% of maximum footcandle level.)
CB=Distance in feet across or down to center beam location.

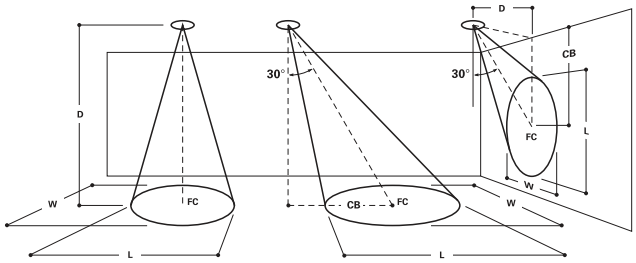

LED Track

HALO

Cooper Lighting
by EATON

Innovation you can rely on™

Technology Choice from **HALO**®

The sustainability of the Halo LED luminaire family dramatically reduces the maintenance and service costs over traditional sources. Light emitting diodes (LED) are solid state devices that do not have filaments or glass components that can break, causing the source to fail. Over 70% of the initial light output is maintained after 50,000 hours of operation. LED technology is perfect for almost all applications given there is limited infrared, low heat and no ultraviolet emissions.

Energy Savings

Environmental and legislative awareness continues to drive demand for energy-efficient lighting solutions. LED luminaires are high-efficiency alternatives to more traditional light sources, such as halogen, fluorescent and ceramic metal halide (CMH). Simply changing one fixture to Halo LED saves $365 over the life of the fixture.

- Energy Saving $235[1]
- Replacement Lamp Savings $125
- Savings based on twelve hours of average use per day and 50,000 hours lifetime of the L806HO vs. 70W CMH

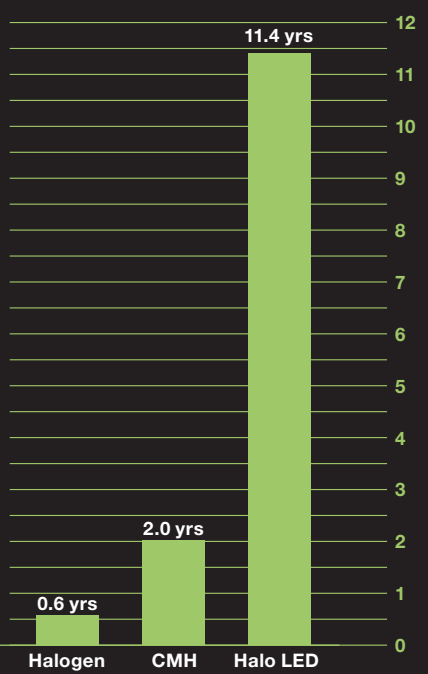

Life Comparison[2]

[1] Average energy cost of $0.11 per KWH
[2] 4,380 hours/year (12 hours per day)

L806SM / L807SM

The Halo L806SM and L807SM LED track fixture family are high-efficacy with a low-profile design. Ideal for accent and display lighting applications, the L806SM and L807SM feature die-cast aluminum construction in two sleek, simple designs. Available in multiple color temperatures and beam distributions, these luminaires are perfect for those applications where simplicity and performance are required.

Features

- 1073 lumen package @ 3000K
- 89 LPW @ 12.06W
- Various optical distributions available
- 80+ CRI
- 2700K, 3000K, and 4000K color temperatures
- Three finishes: White, Matte Black, Aluminum Haze
- Available on multiple Halo Power-Trac systems as well as Juno®, Lightolier® and Global® track systems
- L70 @ 50,000 hours
- Five-year warranty

L806SM

L807SM

Ordering Information

Sample Number: L806SP830AH (Halo or Lazer Track connector, Spot Distribution, 3000K, with Aluminum Haze Finish)

Track	LED	Beam	CRI	CCT	Finish	Voltage
L=Halo and Lazer Power-Trac **LJ**=Juno® Track[1] **LL**=Lightolier® Track[2] **L2G**=Global® TEK or HTEK[3]	**806SM**=806SM **807SM**=807SM	**SP**=Spot 14° **WS**=Wide Spot 18° **NF**=Narrow Flood 28° **FL**=Flood 44°	**80**=80+	**27**=2700K **30**=3000K **40**=4000K	**AH**=Aluminum Haze **MB**=Black **P**=White	**277**=277V (Only with HTEK) **[Blank]**=120V

NOTES: 1. Juno® T single circuit and 2-circuit track contact. Juno® is a registered trademark of Juno® Lighting. **2.** Lightolier® Lyfespan 6000 single circuit and 2 circuit track contact. Lightolier® is a registered trademark of Philips Lighting. **3.** Global® is a registered trademark of Nordic Aluminum.

Energy Data

L806 / L807

3000K	CBCP
Spot 14°	11,119
Wide Spot 18°	6482
Narrow Flood 28°	2639
Flood 44°	1622

Lighting Data - 3000K Spot	
Lumens	1073
Lumens per Watt	89
Watts at 120VAC	12.06

Energy Data	
Input Power	12.06W
Power Factor	>.9
Input Current	.149 Amps

Dimensions

L806SM

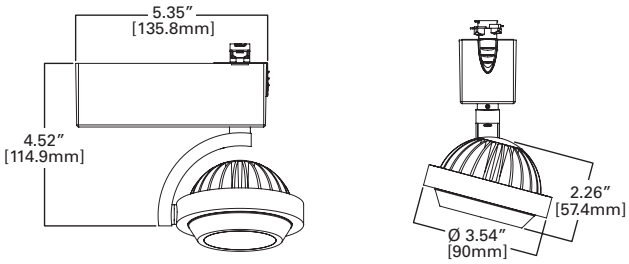

L807SM

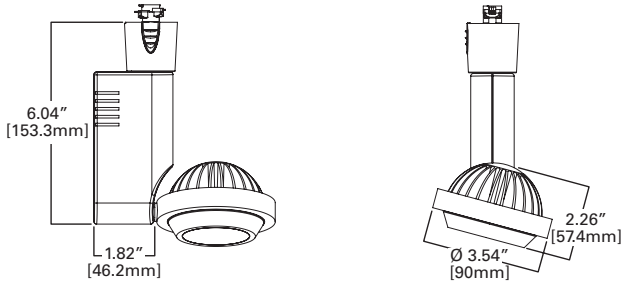

Photometry

CCT= 3000K
2700K Multiplier= 0.92
4000K Multiplier= 1.05

Spot: 14°
CBCP: 11,119
Lumens: 1073
LPW: 89

0° Aiming Angle Horizontal Footcandles				30° Aiming Angle Horizontal Footcandles					30° Aiming Angle Vertical Footcandles on Wall				
D	FC	L	W	D	FC	L	W	CB	D	FC	L	W	CB
4	686	1.5	1.5	4	445	2	1.6	2.3	2	428	2.5	1.3	3.5
7	224	2.6	2.6	7	145	3.5	2.8	4	4	107	5	2.7	6.9
9	135	3.3	3.3	9	88	4.4	3.6	5.2	6	48	7.5	4	10.4
13	65	4.8	4.8	13	42	6.4	5.2	7.5	10	17	12.5	6.6	17.3
16	43	6	6	16	28	7.9	6.4	9.2	12	12	15	8	20.8

Wide Spot: 18°
CBCP: 6,482
Lumens: 1000
LPW: 83

D	FC	L	W	D	FC	L	W	CB	D	FC	L	W	CB
4	400	2	2	4	261	2.6	2.3	2.3	2	257	3.2	1.8	3.5
7	131	3.5	3.5	7	85	4.5	4	4	4	64	6.5	3.5	6.9
9	79	4.6	4.6	9	52	5.8	5.1	5.2	6	29	9.7	5.3	10.4
13	38	6.6	6.6	13	25	8.4	7.3	7.5	10	10	16.2	8.8	17.3
16	25	8.1	8.1	16	16	10.3	9	9.2	12	7	19.4	10.6	20.8

Narrow Flood: 28°
CBCP: 2,639
Lumens: 934
LPW: 75

D	FC	L	W	D	FC	L	W	CB	D	FC	L	W	CB
4	165	3.1	3.1	4	115	4	3.6	2.3	2	125	4.2	2.7	3.5
7	54	5.5	5.5	7	38	6.9	6.2	4	4	31	8.4	5.4	6.9
9	33	7.1	7.1	9	23	8.9	8	5.2	6	14	12.6	8	10.4
13	16	10.2	10.2	13	11	12.9	11.6	7.5	10	5	21.1	13.4	17.3
16	10	12.6	12.6	16	7	15.9	14.2	9.2	12	3	25.3	16.1	20.8

Flood: 44°
CBCP: 1,622
Lumens: 919
LPW: 77

D	FC	L	W	D	FC	L	W	CB	D	FC	L	W	CB
4	101	4.1	4.1	4	76	5	4.6	2.3	2	117	3.8	3.1	3.5
7	33	7.2	7.2	7	25	8.7	8	4	4	29	7.5	6.2	6.9
9	20	9.3	9.3	9	15	11.2	10.3	5.2	6	13	11.3	9.3	10.4
13	10	13.4	13.4	13	7	16.2	14.9	7.5	10	5	18.8	15.5	17.3
16	6	16.6	16.6	16	5	19.9	18.3	9.2	12	3	22.6	18.7	20.8

Notes and Definitions
Beam spread is to 50% center beam candlepower (CBCP).
D= Distance in feet to floor or wall.
FC= Footcandles on floor or wall at center beam aiming location.
L= Effective Visual Beam length in feet (50% of maximum footcandle level)
W= Effective Visual Beam width in feet (50% of maximum footcandle level)
CB= Distance in feet across or down to center beam location

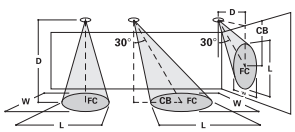

L806 / L807

The Halo L806 and L807 LED track fixture family are high-efficacy with a low-profile design. Ideal for accent and display lighting applications, the L806 and L807 feature die-cast aluminum construction in two sleek, simple designs. Available in multiple color temperatures and beam distributions, these luminaires are perfect for those applications where simplicity and performance are required.

Features

- 1250 lumen package @ 3000K
- 70 LPW @ 17W
- Various optical distributions available
- 80+ CRI
- 2700K, 3000K, and 4000K color temperatures
- Three finishes: White, Matte Black, Aluminum Haze
- Available on multiple Halo Power-Trac systems as well as Juno®, Lightolier® and Global® track systems
- DLC compliant
- L70 @ 50,000 hours
- Five-year warranty

L806

L807

Ordering Information

Sample Number: L806SP830AH (Halo or Lazer Track connector, Spot Distribution, 3000K, with Aluminum Haze Finish)

Track	LED	Beam	CRI	CCT	Finish	Voltage
L=Halo and Lazer Power-Trac **LJ**=Juno® Track[1] **LL**=Lightolier® Track[2] **L2G**=Global® TEK or HTEK[3]	**806**=806 **807**=807	**SP**=Spot 15° **NF**=Narrow Flood 22° **FL**=Flood 37°	**80**=80+	**27**=2700K **30**=3000K **40**=4000K	**AH**=Aluminum Haze **MB**=Black **P**=White	**277**=277V (Only with HTEK) **[Blank]**=120V

NOTES: 1. Juno® T single circuit and 2-circuit track contact. Juno® is a registered trademark of Juno® Lighting. **2.** Lightolier® Lyfespan 6000 single circuit and 2 circuit track contact. Lightolier® is a registered trademark of Philips Lighting. **3.** Global® is a registered trademark of Nordic Aluminum.

DesignLights Consortium® Qualified. Refer to www.designlights.org Qualified Products List under Family Models for details.

Energy Data

L806 / L807

3000K	CBCP	Lighting Data - 3000K Spot		Energy Data	
Spot 15°	11,057	Lumens	1253	Input Power	17.71W
Narrow Flood 22°	8990	Lumens per Watt	70.8	Power Factor	>.9
Flood 37°	2480	Watts at 120VAC	17.71	Input Current	.149 Amps

Dimensions

L806

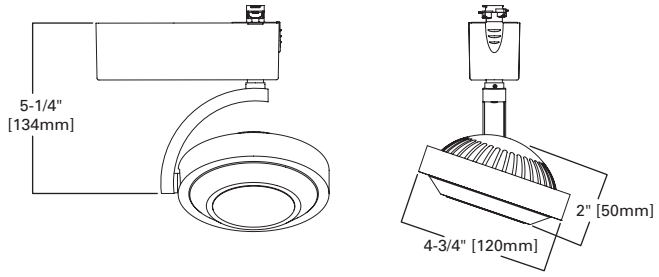

L807

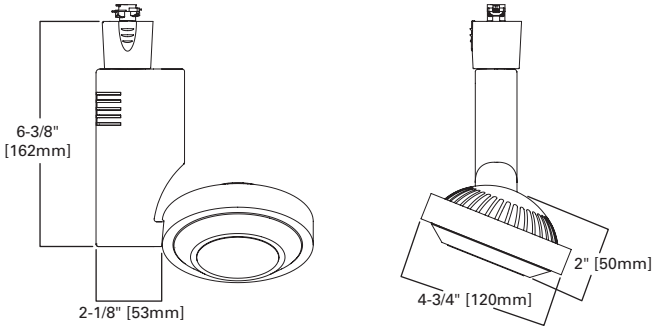

Photometry

CCT= 3000K
4000K Multiplier= 1.25

	0° Aiming Angle Horizontal Footcandles				30° Aiming Angle Horizontal Footcandles					30° Aiming Angle Vertical Footcandles on Wall					60° Aiming Angle Vertical Footcandles on Wall				
	D	FC	L	W	D	FC	L	W	CB	D	FC	L	W	CB	D	FC	L	W	CB
Wide Spot: 15°	5	442	1.4	1.4	5	287	1.7	1.5	2.9	3	180	2.6	1.5	5.2	3	798	1	0.9	1.7
CBCP: 11,057	7.5	197	2	2	7.5	128	2.6	2.3	4.3	4	101	3.4	1.9	6.9	4	449	1.4	1.2	2.3
Lumens: 1253	10	111	2.7	2.7	10	72	3.5	3.1	5.8	5	65	4.3	2.4	8.7	5	287	1.7	1.5	2.9
LPW: 70.8	12.5	71	3.4	3.4	12.5	46	4.3	3.8	7.2	6	45	5.1	2.9	10.4	6	199	2.1	1.8	3.5
	15.0	49	4.1	4.1	15	32	5.2	4.6	8.7										
	D	FC	L	W	D	FC	L	W	CB	D	FC	L	W	CB	D	FC	L	W	CB
Narrow Flood: 22°	5	360	1.7	1.7	5	234	2.2	1.9	2.9	3	158	2.9	1.7	5.2	3	649	1.3	1.1	1.7
CBCP: 8,990	7.5	160	2.5	2.5	7.5	104	3.3	2.8	4.3	4	89	3.9	2.3	6.9	4	365	1.7	1.5	2.3
Lumens: 1289	10	90	3.3	3.3	10	58	4.3	3.8	5.8	5	57	4.9	2.9	8.7	5	234	2.2	1.9	2.9
LPW: 72.4	12.5	58	4.2	4.2	12.5	37	5.4	4.7	7.2	6	40	5.8	3.5	10.4	6	162	2.6	2.3	3.5
	15	40	5	5	15	26	6.5	5.7	8.7										
	D	FC	L	W	D	FC	L	W	CB	D	FC	L	W	CB	D	FC	L	W	CB
Flood: 37°	5	99	3.2	3.2	5	72	3.6	3.4	2.9	3	67	3.2	2.7	5.2	3	201	2.2	2.1	1.7
CBCP: 2,480	7.5	44	4.8	4.8	7.5	32	5.5	5.2	4.3	4	38	4.3	3.6	6.9	4	113	2.9	2.8	2.3
Lumens: 1228	10	25	6.4	6.4	10	18	7.3	6.9	5.8	5	24	5.4	4.5	8.7	5	72	3.6	3.4	2.9
LPW: 69	12.5	16	8	8	12.5	12	9.1	8.6	7.2	6	17	6.5	5.4	10.4	6	50	4.4	4.1	3.5
	15	11	9.6	9.6	15	8	10.9	10.3	8.7										

Notes and Definitions
Beam spread is to 50% center beam candlepower (CBCP).
D= Distance in feet to floor or wall.
FC= Footcandles on floor or wall at center beam aiming location.
L= Effective Visual Beam length in feet (50% of maximum footcandle level)
W= Effective Visual Beam width in feet (50% of maximum footcandle level)
CB= Distance in feet across or down to center beam location

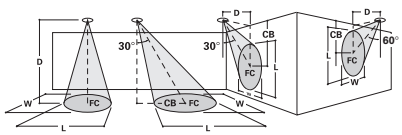

L806HO / L807HO

The Halo L806HO and L807HO LED high-efficacy, low-profile track fixture is ideal for accent and display lighting applications. Featuring die-cast construction with a simple low profile design, these lampholders are perfect for those applications where performance is required from a discreet source.

Features

- 2600 lumen package @ 3000K
- 73 LPW @ 34W
- Various optical distributions available
- 80+ CRI
- 2700K, 3000K, and 4000K color temperatures
- Three finishes: White, Matte Black, Aluminum Haze
- Available on multiple Halo Power-Trac systems as well as Juno®, Lightolier® and Global® track systems
- DLC compliant
- L70 @ 50,000 hrs.
- Five-year warranty

L806HO

L807HO

Ordering Information

Sample Number: L806HOSP8030AH (Halo or Lazer Track connector, Spot Distribution, 3000K, with Aluminum Haze Finish)

Track	LED	Beam	CRI	CCT	Finish	Voltage
L=Halo and Lazer Power-Trac **LJ**=Juno® Track[1] **LL**=Lightolier® Track[2] **L2G**=Global® TEK or HTEK[3]	**806HO**=806HO **807HO**=807HO	**SP**=Spot 11° **WS**=Wide Spot 18° **NF**=Narrow Flood 25° **FL**=Flood 45°	**80**=80+	**27**=2700K **30**=3000K **40**=4000K	**AH**=Aluminum Haze **MB**=Black **P**=White	**277**=277V (Only with HTEK) **[Blank]**=120V

NOTES: 1. Juno® T single circuit and 2-circuit track contact. Juno® is a registered trademark of Juno® Lighting. **2.** Lightolier® Lyfespan 6000 single circuit and 2 circuit track contact. Lightolier® is a registered trademark of Philips Lighting. **3.** Global® is a registered trademark of Nordic Aluminum.

DesignLights Consortium® Qualified. Refer to www.designlights.org Qualified Products List under Family Models for details.

Energy Data

L806HO / L807HO

3000K	CBCP
Spot 11°	32,900
Wide Spot 18°	26,250
Narrow Flood 25°	10,800
Flood 45°	4,600

Lighting Data - 3000K Spot	
Lumens	2600
Lumens per Watt	76

Energy Data	
Input Power	34.12W
Power Factor	>.9
Input Current	.30 Amps

Dimensions

L806HO

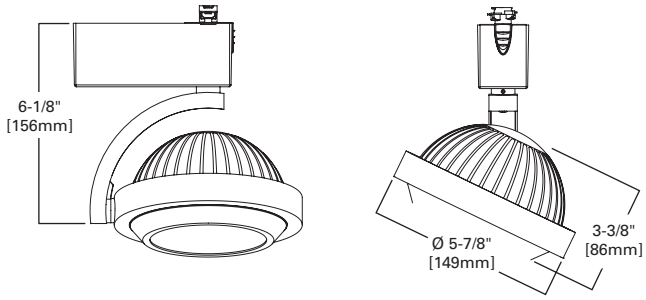

L807HO

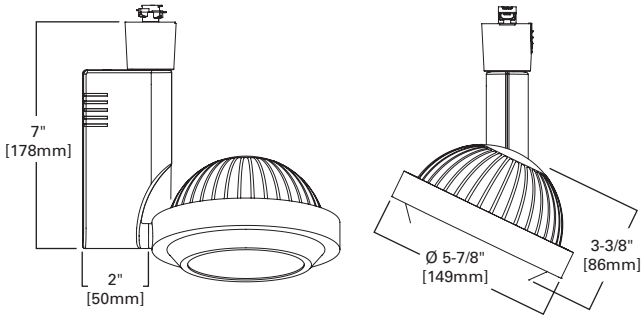

Photometry

CCT= 3000K
4000K Multiplier= 1.25

0° Aiming Angle Horizontal Footcandles

	D	FC	L	W
Spot: 11°	4	2055	1.4	1.4
CBCP: 32,900	7	671	2.4	2.4
Lumens: 2499	9	406	3.1	3.1
LPW: 73	13	195	4.5	4.5
	16	128	5.5	5.5
	D	**FC**	**L**	**W**
Wide Spot: 18°	4	1641	1.5	1.5
CBCP: 26,250	7	536	2.6	2.6
Lumens: 2609	9	324	3.4	3.4
LPW: 76	13	155	4.9	4.9
	16	103	6	6
	D	**FC**	**L**	**W**
Narrow Flood: 25°	4	676	2.7	2.7
CBCP: 10,800	7	221	4.7	4.7
Lumens: 2663	9	133	6.1	6.1
LPW: 77	13	64	8.8	8.8
	16	42	10.8	10.8
	D	**FC**	**L**	**W**
Flood: 45°	4	287	4.3	4.3
CBCP: 4,600	7	94	7.5	7.5
Lumens: 2794	9	57	9.6	9.6
LPW: 80	13	27	13.9	13.9
	16	18	17.1	17.1

30° Aiming Angle Horizontal Footcandles

	D	FC	L	W	CB
Spot: 11°	4	1335	1.6	1.5	2.3
CBCP: 32,900	7	436	2.8	2.6	4
Lumens: 2499	9	264	3.5	3.3	5.2
LPW: 73	13	126	5.1	4.8	7.5
	16	83	6.3	5.9	9.2
	D	**FC**	**L**	**W**	**CB**
Wide Spot: 18°	4	1066	2.1	1.8	2.3
CBCP: 26,250	7	348	3.6	3.2	4
Lumens: 2609	9	211	4.7	4.1	5.2
LPW: 76	13	101	6.7	5.9	7.5
	16	67	8.3	7.2	9.2
	D	**FC**	**L**	**W**	**CB**
Narrow Flood: 25°	4	447	3.4	3.1	2.3
CBCP: 10,800	7	146	6	5.4	4
Lumens: 2663	9	88	7.7	6.9	5.2
LPW: 77	13	42	11.1	9.9	7.5
	16	28	13.7	12.2	9.2
	D	**FC**	**L**	**W**	**CB**
Flood: 45°	4	221	5.1	4.7	2.3
CBCP: 4,600	7	72	8.9	8.2	4
Lumens: 2794	9	44	11.5	10.5	5.2
LPW: 80	13	21	16.5	15.2	7.5
	16	14	20.4	18.7	9.2

30° Aiming Angle Vertical Footcandles on Wall

	D	FC	L	W	CB
Spot: 11°	2	1196	2.2	1.1	3.5
CBCP: 32,900	4	299	4.4	2.3	6.9
Lumens: 2499	6	133	6.6	3.4	10.4
LPW: 73	10	48	11	5.7	17.3
	12	33	13.2	6.9	20.8
	D	**FC**	**L**	**W**	**CB**
Wide Spot: 18°	2	896	2.7	1.5	3.5
CBCP: 26,250	4	224	5.4	2.9	6.9
Lumens: 2609	6	100	8.1	4.4	10.4
LPW: 76	10	36	13.4	7.3	17.3
	12	25	16.1	8.8	20.8
	D	**FC**	**L**	**W**	**CB**
Narrow Flood: 25°	2	464	3.8	2.3	3.5
CBCP: 10,800	4	116	7.6	4.7	6.9
Lumens: 2663	6	52	11.4	7	10.4
LPW: 77	10	19	18.9	11.7	17.3
	12	13	22.7	14.1	20.8
	D	**FC**	**L**	**W**	**CB**
Flood: 45°	2	347	3.8	3.2	3.5
CBCP: 4,600	4	87	7.5	6.3	6.9
Lumens: 2794	6	39	11.3	9.5	10.4
LPW: 80	10	14	18.8	15.8	17.3
	12	10	22.5	19	20.8

Notes and Definitions
Beam spread is to 50% center beam candlepower (CBCP).
D= Distance in feet to floor or wall.
FC= Footcandles on floor or wall at center beam aiming location.
L= Effective Visual Beam length in feet (50% of maximum footcandle level)
W= Effective Visual Beam width in feet (50% of maximum footcandle level)
CB= Distance in feet across or down to center beam location

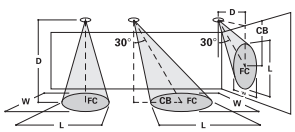

L802

Halo Span LED Wall Wash fixture family is designed for use as a downlight or wall wash. The Span LED luminaire is ideal for applications where a wide even distribution of light is desired. The luminaire can be used to wash a wall with light or as a downlight to evenly illuminate a counter. Utilizing LED technology and an electronic driver, it is extremely energy efficient.

Features

- Three finishes: White, Matte Black, Aluminum Haze
- 3000K and 4000K color temperatures
- 80+ CRI
- Lumen output: 2000, 3000, or 4000
- L70 and 50,000 hours
- Easy installation yields simple retrofit opportunities with various connector options
- Five-year limited warranty

Ordering Information

Sample Number: L80228030P

Track	Lamp Type	Series	Output	CRI	CCT	Finish	Voltage
L=Halo and Lazer Power-Trac **LA**=Halo Architectural Track **LF**=Halo Architectural Flex Track **LJ**=Juno® Track[1] **LL**=Lightolier® Track[2] **L2G**=Global® TEK or HTEK[3]	**8**=LED	**02**=SPAN	**2**=2000 lm **3**=3000 lm **4**=4000 lm	**80**=80+	**30**=3000K **40**=4000K	**AH**=Aluminum Haze **MB**=Black (L and LA only) **P**=White (L and LA only)	**277**=277V (Only with LA and L2G) **[Blank]**=120V

NOTES: 1. Juno® T single circuit and 2-circuit track contact. Juno® is a registered trademark of Juno® Lighting. **2.** Lightolier® Lyfespan 6000 single circuit and 2 circuit track contact. Lightolier® is a registered trademark of Philips Lighting. **3.** Global® is a registered trademark of Nordic Aluminum.

Dimensions

LF - Flexible Track

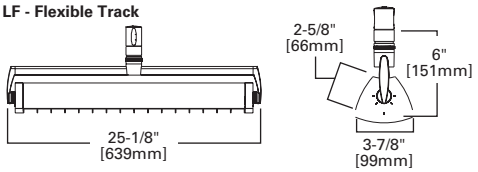

L - Power Trac

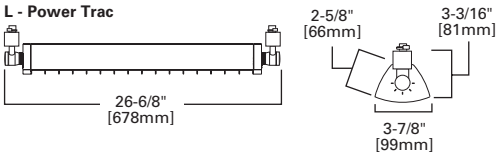

LA - Architectural Track

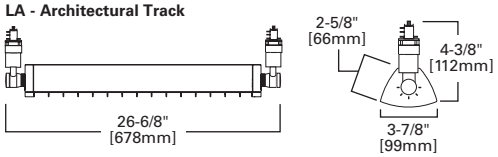

Photometry

High Output

CCT= 3000K
4000K Multiplier= 1.05

	0° Aiming Angle Horizontal Footcandles				30° Aiming Angle Horizontal Footcandles					30° Aiming Angle Vertical Footcandles on Wall				
L80228030	**D**	**FC**	**L**	**W**	**D**	**FC**	**L**	**W**	**CB**	**D**	**FC**	**L**	**W**	**CB**
Lumens: 2119	4	51	8.3	8.4	4	45	8.2	8.5	2.3	2	117	4.1	4.7	3.5
LpW: 85	7	17	14.6	14.6	7	15	14.4	14.9	4	4	29	8.3	9.3	6.9
120V Input Watts: 24.9	9	10	18.7	18.8	9	9	18.5	19.2	5.2	6	13	12.4	14	10.4
Line Amps: 0.209	13	5	27	27.2	13	4	26.7	27.7	7.5	10	5	20.7	23.4	17.3
Power Factor: >.99	16	3	33.3	33.4	16	3	32.9	34.1	9.2	12	3	24.8	28	20.8
L80238030	**D**	**FC**	**L**	**W**	**D**	**FC**	**L**	**W**	**CB**	**D**	**FC**	**L**	**W**	**CB**
Lumens: 3342	4	79	9.2	8.9	4	71	8.7	9.1	2.3	2	225	4.1	4.5	3.5
LpW: 90	7	26	16.1	15.5	7	23	15.2	15.9	4	4	56	8.1	9.1	6.9
120V Input Watts: 37.0	9	16	20.7	20	9	14	19.6	20.4	5.2	6	25	12.2	13.6	10.4
Line Amps: 0.31	13	7	29.8	28.9	13	7	28.3	29.5	7.5	10	9	20.3	22.7	17.3
Power Factor: >.99	16	5	36.7	35.5	16	4	34.8	36.3	9.2	12	6	24.4	27.2	20.8
L80248030	**D**	**FC**	**L**	**W**	**D**	**FC**	**L**	**W**	**CB**	**D**	**FC**	**L**	**W**	**CB**
Lumens: 4058	4	98	8.3	8.3	4	87	8.2	8.5	2.3	2	223	4.2	4.7	3.5
LpW: 83	7	32	14.5	14.6	7	28	14.3	14.9	4	4	56	8.3	9.4	6.9
120V Input Watts: 49.0	9	19	18.6	18.8	9	17	18.4	19.1	5.2	6	25	12.5	14.1	10.4
Line Amps: 0.41	13	9	26.9	27.1	13	8	26.6	27.6	7.5	10	9	20.8	23.5	17.3
Power Factor: >.99	16	6	33.1	33.4	16	5	32.8	34	9.2	12	6	25	28.1	20.8

Notes and Definitions
Beam spread is to 50% center beam candlepower (CBCP).
D= Distance in feet to floor or wall.
FC= Footcandles on floor or wall at center beam aiming location.
L= Effective Visual Beam length in feet (50% of maximum footcandle level)
W= Effective Visual Beam width in feet (50% of maximum footcandle level)
CB= Distance in feet across or down to center beam location

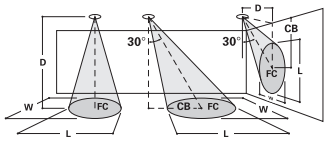

Stasis LED Large

The Stasis LED Large offers the high-intensity lighting often required for retail and grocery applications and can easily replace more traditional high-wattage CMH sources. The patented optical design yields clean patterns of light with optimal cut-off and minimized source brightness. A variety of optical packages and the ability to field change the distribution sets this luminaire apart from all other LED track fixtures. Clean lines and aesthetic design fit easily into all applications and become part of the design concept.

Features

- Three finishes: White, Matte Black, Aluminum Haze
- 3000K and 4000K color temperatures
- High 85 CRI
- Four field-changeable optical distributions:
  - Spot 15°
  - Narrow flood 25°
  - Flood 37°
  - Wall wash
- Wall wash luminaire is available in both 18W or 38W and ships with solite lens
- Easy installation yields simple retrofit opportunities with various connector options
- Superior light quality when compared to traditional light sources
- Five-year limited warranty

Ordering Information

Sample Number: L805LRGFL830P

Track	LED	Size	Beam	CRI	CCT	Finish	Voltage	Power	Accessories
L=Halo and Lazer Power-Trac **LA**=Halo Architectural Track **LF**=Halo Architectural Flex Track **LJ**=Juno® Track[1] **LL**=Lightolier® Track[2] **L2G**=Global® TEK or HTEK[3]	**805**=805	**LRG**=Large 38W	**SP**=Spot 15° **NF**=Narrow Flood 25° **FL**=Flood 37° **WW**=Wall Wash	**8**=85	**30**=3000K **40**=4000K	**AH**=Aluminum Haze **MB**=Black (L and LA only) **P**=White (L and LA only)	**277**=277V (Only with LA and L2G) **[Blank]**=120V	**HO**=High Output (WW Beam only)	**L850**=Solite Lens Kit **L8SP**=15° Spot Optic Kit **L8NF**=25° Narrow Flood Optic Kit **L8FL**=37° Flood Optic Kit **L8WW**=Wall Wash Optic Kit

NOTES: 1. Juno® T single circuit and 2-circuit track contact. Juno® is a registered trademark of Juno® Lighting. **2.** Lightolier® Lyfespan 6000 single circuit and 2 circuit track contact. Lightolier® is a registered trademark of Philips Lighting. **3.** Global® is a registered trademark of Nordic Aluminum.

DesignLights Consortium® Qualified. Refer to www.designlights.org Qualified Products List under Family Models for details.

Dimensions

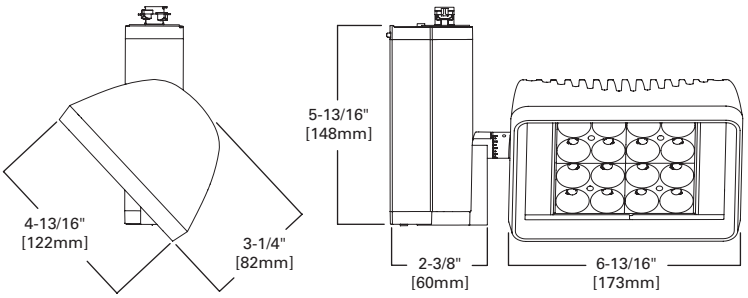

Photometry

High Output

CCT= 3000K

	0° Aiming Angle Horizontal Footcandles				30° Aiming Angle Horizontal Footcandles					30° Aiming Angle Vertical Footcandles on Wall				
	D	FC	L	W	D	FC	L	W	CB	D	FC	L	W	CB
Spot: 15°	5.0	1110	2.0	2.0	5.0	721	2.7	2.3	2.9	3.0	444	4.2	2.3	5.2
CBCP: 27,741	7.5	493	3.0	3.0	7.5	320	4.0	3.5	4.3	4.0	250	5.6	3.0	6.9
Lumens: 2399	10.0	277	4.0	4.0	10.0	180	5.4	4.7	5.8	5.0	160	7.0	3.8	8.7
LPW: 64.1	12.5	178	5.0	5.0	12.5	115	6.7	5.9	7.2	6.0	111	8.4	4.5	10.4
	15.0	123	5.9	5.9	15.0	80	8.1	7.0	8.7					
	D	FC	L	W	D	FC	L	W	CB	D	FC	L	W	CB
Narrow Flood: 25°	5.0	516	3.0	3.0	5.0	343	3.9	3.5	2.9	3.0	244	5.4	3.2	5.2
CBCP: 12,898	7.5	229	4.5	4.5	7.5	152	5.8	5.2	4.3	4.0	137	7.2	4.2	6.9
Lumens: 2383	10.0	129	5.9	5.9	10.0	86	7.7	6.9	5.8	5.0	88	9.0	5.3	8.7
LPW: 63.6	12.5	83	7.4	7.4	12.5	55	9.7	8.7	7.2	6.0	61	10.8	6.3	10.4
	15.0	57	8.9	8.9	15.0	38	11.6	10.4	8.7					
	D	FC	L	W	D	FC	L	W	CB	D	FC	L	W	CB
Flood: 37°	5.0	227	4.7	4.7	5.0	163	5.5	5.3	2.9	3.0	139	5.9	4.6	5.2
CBCP: 5,669	7.5	101	7.1	7.1	7.5	72	8.3	7.9	4.3	4.0	78	7.9	6.1	6.9
Lumens: 2,319	10.0	57	9.4	9.5	10.0	41	11.1	10.6	5.8	5.0	50	9.8	7.6	8.7
LPW: 62.0	12.5	36	11.8	11.9	12.5	26	13.9	13.2	7.2	6.0	35	11.8	9.2	10.4
	15.0	25	14.1	14.2	15.0	18	16.6	15.9	8.7					

Notes and Definitions
Beam spread is to 50% center beam candlepower (CBCP).
D= Distance in feet to floor or wall.
FC= Footcandles on floor or wall at center beam aiming location.
L= Effective Visual Beam length in feet (50% of maximum footcandle level)
W= Effective Visual Beam width in feet (50% of maximum footcandle level)
CB= Distance in feet across or down to center beam location

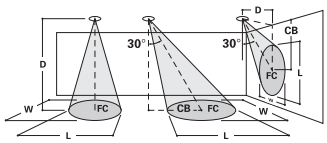

Wall Wash

High Output Wall Wash
Lumens: 2,052
LPW: 55.5

Single Fixture 3' From Wall
Distance From Fixture Along Wall

DD	0	1	2	3	4	5
1	93	67	35	12	2	1
2	83	57	32	14	3	2
3	53	39	24	12	3	2
4	32	25	17	10	4	2
5	19	16	12	8	4	3
6	12	10	8	6	3	3
7	7	7	6	5	3	2
8	5	5	4	4	4	2
9	4	3	3	3	2	2
10	3	3	2	2	2	2

Multiple Fixtures 3' From Wall
Spacing Between Fixtures

DD	4			5			6		
1	100	72	100	95	42	95	94	23	94
2	93	65	93	87	44	87	85	28	85
3	64	49	64	57	36	57	55	25	55
4	43	36	43	37	28	37	34	21	34
5	29	26	29	24	21	24	22	17	22
6	21	19	21	17	15	17	15	13	15
7	15	14	15	12	12	12	11	10	11
8	11	11	11	9	9	9	8	8	8
9	9	9	9	7	7	7	6	6	6
10	7	7	7	6	6	6	5	5	5

Notes
- Illuminance values for multiple fixtures are based upon the center two units of a four unit array. Footcandle values are centerline of fixtures and centered between fixtures.1 footcandle = 10.76 lux. 1 foot(') = 304.8mm.
- Illuminance values are cosine corrected initial value with no contribution from inter reflections from other room surfaces. Total illumination may increase from contributions from other surfaces.
- Changing fixture spacing will affect illuminance level.

$$\frac{\text{Existing Spacing}}{\text{New Spacing}} \times \text{Average Table Fc Level}$$

- 38W Multiplier = .5

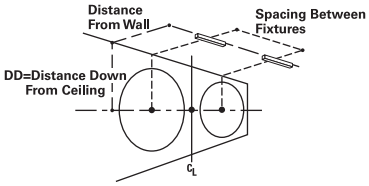

Stasis LED Small and Medium

The Stasis LED Small and Medium luminaire are perfect for those applications where performance is required from a discreet source. This fixture family can effortlessly replace traditional halogen and CMH light sources while yielding up to 85% energy and maintenance savings. Tight optical control provides superior light quality and precise aiming with minimal spill light. Stasis LED stands in a league all its own.

Features

- Three finishes: White, Matte Black, Aluminum Haze
- 3000K and 4000K color temperatures
- High 85 CRI
- Four optical distributions
  - Spot 9°
  - Wide Spot 15°
  - Narrow Flood 25°
  - Flood 40°
- ELV dimmable to 15%
- Easy installation yields simple retrofit opportunities with various connector options
- Superior light quality when compared to traditional light sources
- Five-year limited warranty

Ordering Information

Sample Number: L805MEDFL830P

Track	LED	Size	Beam	CRI	CCT	Finish	Voltage	Accessories
L=Halo and Lazer Power-Trac **LA**=Halo Architectural Track **LF**=Halo Architectural Flex Track **LJ**=Juno® Track[1] **LL**=Lightolier® Track[2] **L2G**=Global® TEK or HTEK[3]	**805**=805	**SML**=Small 8W **MED**=Medium 17W	**SP**=Spot 9° **WS**=Wide Spot 15° **NF**=Narrow Flood 25° **FL**=Flood 40°	**8**=85	**30**=3000K **40**=4000K	**AH**=Aluminum Haze **MB**=Black (L and LA only) **P**=White (L and LA only)	**277**=277V (Only with LA or HTEK) **[Blank]**=120V	**LM10530**=Media Holder

NOTES: 1. Juno® T single circuit and 2-circuit track contact. Juno® is a registered trademark of Juno® Lighting. **2.** Lightolier® Lyfespan 6000 single circuit and 2 circuit track contact. Lightolier® is a registered trademark of Philips Lighting. **3.** Global® is a registered trademark of Nordic Aluminum.

DesignLights Consortium® Qualified. Refer to www.designlights.org Qualified Products List under Family Models for details.

Dimensions

Small

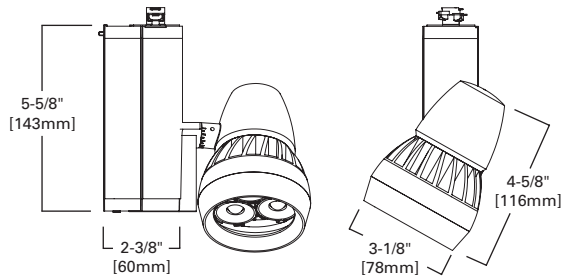

Medium

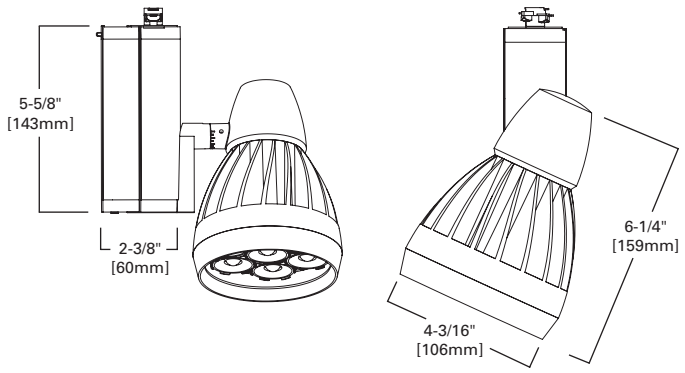

Photometry

Small

CCT= 3000K
4000K Multiplier= 1.25

0˚ Aiming Angle
Horizontal Footcandles

Spot: 9˚
CBCP: 14,627
Lumens: 436
LPW: 55.2

D	FC	L	W
5.0	585	0.8	0.8
7.5	260	1.1	1.1
10.0	146	1.5	1.5
12.5	94	1.9	1.9
15.0	65	2.3	2.3

Wide Spot: 15˚
CBCP: 5,238
Lumens: 449
LPW: 56.8

D	FC	L	W
5.0	210	1.4	1.4
7.5	93	2.1	2.1
10.0	52	2.8	2.8
12.5	34	3.5	3.5
15.0	23	4.2	4.2

Narrow Flood: 25˚
CBCP: 1,186
Lumens: 384
LPW: 46.3

D	FC	L	W
5.0	47	2.6	2.6
7.5	21	3.9	3.9
10.0	12	5.2	5.2
12.5	8	6.5	6.5
15.0	5	7.8	7.8

Flood: 40˚
CBCP: 1,044
Lumens: 391
LPW: 49.5

D	FC	L	W
5.0	42	2.9	2.9
7.5	19	4.4	4.4
10.0	10	5.8	5.8
12.5	7	7.3	7.3
15.0	5	8.8	8.8

Medium

CCT= 3000K
4000K Multiplier= 1.25

0˚ Aiming Angle
Horizontal Footcandles

Spot: 9˚
CBCP: 39,188
Lumens: 999
LPW: 58.1

D	FC	L	W
5.0	1568	0.7	0.7
7.5	697	1	1
10.0	392	1.4	1.4
12.5	251	1.7	1.7
15.0	174	2	2

Wide Spot: 15˚
CBCP: 14,251
Lumens: 994
LPW: 58.1

D	FC	L	W
5.0	570	1.3	1.3
7.5	253	2	2
10.0	143	2.7	2.7
12.5	91	3.3	3.3
15.0	63	4	4

Narrow Flood: 25˚
CBCP: 4,198
Lumens: 903
LPW: 51.6

D	FC	L	W
5.0	198	1.8	1.8
7.5	88	2.7	2.7
10.0	49	3.6	3.6
12.5	32	4.5	4.5
15.0	22	5.4	5.4

Flood: 40˚
CBCP: 2,350
Lumens: 921
LPW: 54.5

D	FC	L	W
5.0	42	2.9	2.9
7.5	19	4.4	4.4
10.0	10	5.8	5.8
12.5	7	7.3	7.3
15.0	5	8.8	8.8

Notes and Definitions
Beam spread is to 50% center beam candlepower (CBCP).
D= Distance in feet to floor or wall.
FC= Footcandles on floor or wall at center beam aiming location.
L= Effective Visual Beam length in feet (50% of maximum footcandle level)
W= Effective Visual Beam width in feet (50% of maximum footcandle level)
CB= Distance in feet across or down to center beam location

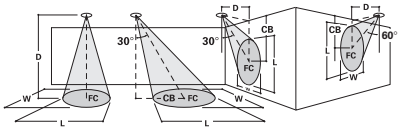

Track Systems

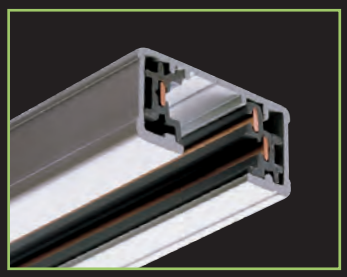

Miniature Track

Miniature track provides versatility for every lighting need.

Decorator finishes, push-in connectors and economy all combine to make single-circuit track perfect for residential or commercial use.

L650 2' Track - 20-1/8" (511mm).

L651 4' Track - 44-1/8" (1121mm).

L652 8' Track - 92-1/8" (2340mm).

L653 12' Track - 140-1/8" (3559mm).

Finishes: White (P), Black (MB), Silver (SL)

Size
11/16" (17.5mm) D by 1-3/8" (35mm) W

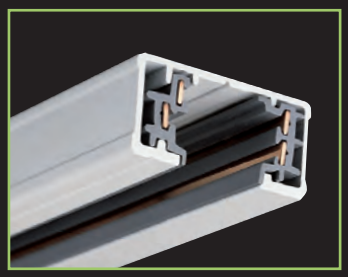

Halo-2 Power-Trac

Halo-2 Power-Trac has two circuits for greater system flexibility.

Halo-2 Power-Trac system provides two separate 20 AMP circuits. Each circuit can be independently switched. Suitable for commercial, merchandising and residential applications.

L641 4' Track - 42-5/8" (1083mm).

L642 8' Track - 90-5/8" (2302mm).

L643 12' Track - 138-5/8" (3521mm)

Finish: White (P), Black (MB), Silver (SL)

Size
11/16" (17.5mm) D by 1-3/8" (35mm) W

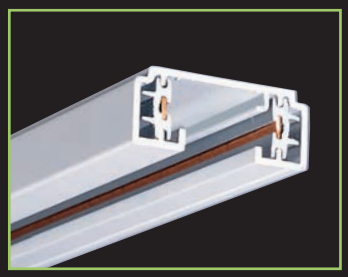

Lazer Track

Lazer track offers economy and convenience.

LZR102 2' Track - 20-1/8" (511mm).

LZR104 4' Track - 44-1/8" (1121mm).

LZR106 6' Track - 68-1/8" (1730mm).

LZR108 8' Track - 92-1/8" (2340mm).

Finishes: White (P), Black (MB)

The Lazer two-conductor track is available in two finishes and 4 lengths. The overall height is only 9/16" with a decorative reveal at the ceiling line.

Size
9/16" (14mm) D by 1-3/8" (35mm) W

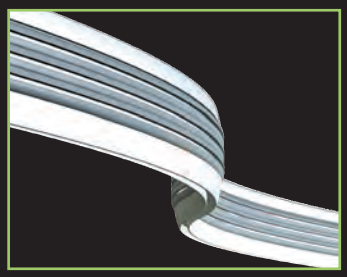

Halo Flexible Track

Halo flexible track is the ultimate in aesthetic, mechanical and electrical versatility.

LF4AH 4' Track

LF4AH 8' Track

Finish: Aluminum Haze (AH)

Halo flexible track is a three circuit, bendable track system. There are two 120V / 20A circuits with dedicated neutrals, as well as a third 12V / 25A circuit. The track can be used as either a stand-alone 120V or 12V system, or a combination of both. Each circuit can be independently switched. The system is suitable for a wide range of commercial, merchandising and residential applications.

Size
1-1/2" (39mm) H and 7/16" (12mm) W

See www.cooperlighting.com for compatible connectors.

Eaton's Cooper Lighting Business
Headquarters
1121 Highway 74 South
Peachtree City, GA 30269
P: 770-486-4800
www.cooperlighting.com

Canada Sales
5925 McLaughlin Road
Mississauga, Ontario L5R 1B8
P: 905-501-3000
F: 905-501-3172

Our Lighting Product Brands
Halo
Halo Commercial
Portfolio
IRiS
RSA
Metalux
Corelite
Neo-Ray
Fail-Safe
MWS
Ametrix
Shaper
io
Lumark
McGraw-Edison
Invue
Lumière
Streetworks
AtLite
Sure-Lites

Our Controls Product Brands
Greengate
iLumin
Zero 88
Fifth Light Technology
iLight (International Only)

FSC
www.fsc.org
MIX
Paper from responsible sources
FSC® C103525

Powering Business Worldwide

Eaton
1000 Eaton Boulevard
Cleveland, OH 44122
United States
Eaton.com

Eaton's Cooper Lighting Business
1121 Highway 74 South
Peachtree City, GA 30269
P: 770-486-4800
www.cooperlighting.com

© 2014 Eaton
All Rights Reserved

Printed in USA
Publication No. ADV131223
January 2014

Eaton is a registered trademark.

All other trademarks are property of their respective owners.

Post Heads

JOB NAME
MENARD INC.
CATALOG NO.
HTM24BLKIM70FO
TYPE
ACORN LIGHT

FO (Finial Option)

Fixture #	Description	Color	Globes	Ht.	Wid.	Collar	Neck	LED	HPS	MH
HTM21	Post Head & Ballast Box	All Colors	Polycarbonate	31"	14"	3”	8"	35W	250	250
HTM24	Post Head & Ballast Box	All Colors	Polycarbonate	35"	16½”	3”	8"	35W	250	250
HTM25-RV	Post Head & Ballast Box	All Colors	Polycarbonate	36"	16"	3”	8"	35W	250	250
HTM25-R3	Post Head & Ballast Box	All Colors	Polycarbonate	36"	16"	3”	8"	35W	250	250
FO Finial	Finial	All Colors	•	5”	•	•	•	•	•	•

•Blackout or Reflector Panels available with some styles.
•Contact Factory for availability.
•For Cut Sheets call Melissa Lighting (800) 345-5399

•Ballast wattage is maximum (lower maybe used)
•Order Ballast separately.

How to Order Post Head: *• Fixture • Color • Ballast Type*
HTM21/ Blk / IHP50

13" Lensed Square MH Downlight

LFHSQL-H13

One 150W or 175W Mogul Base
MH Lamp Non-IC Rated
120V or 277V

JOB NAME
MENARD INC.
CATALOG NO.
LFHSQLH13150EB277V13FSRFRLB24
TYPE
FRONT CANOPY RECESSED SOFFIT LIGHT

COMMERCIAL LIGHTING INDUSTRIES

LiteFrame

Ceiling Cutout: 13 1/4" sq.
Maximum Ceiling Thickness: 1 1/4"
For conversion to millimeters, multiply inches by 25.4
Not to Scale

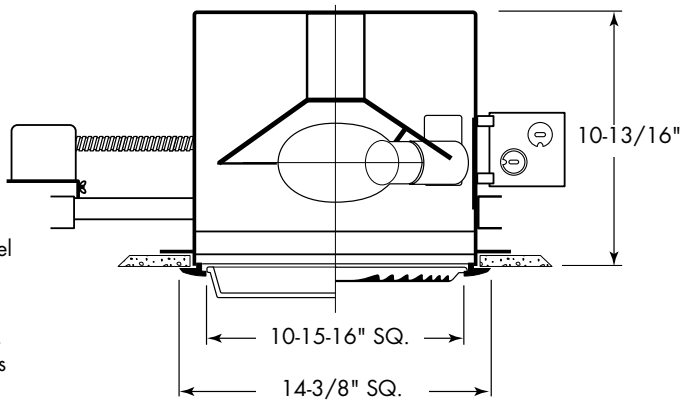

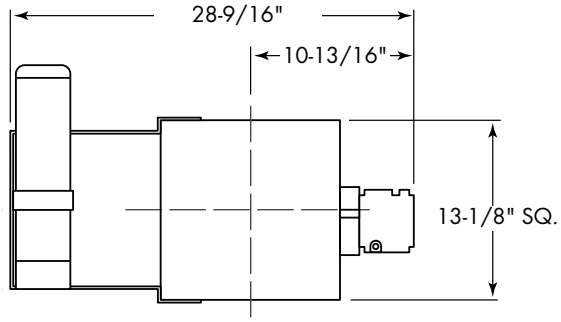

APPLICATIONS:
The LFHSQL-H13 offers a rugged 13" square lensed downlighting solution. Available in a 150 watt or 175 watt version, this luminaire is ideal for a wide variety of medium to high ceiling applications including commercial, retail, and hospitality.

HOUSING:
Steel plaster flange. "Relamp-a-lite" system provides relamping ease. Prewired J-box suitable for through wiring. Thermal protector. Modification available for cable mounting (cable by others). Special painted housing available.

REFLECTOR:
High purity aluminum Alzak reflector. Diecast aluminum stepped regressed trim assembly with white trim ring (or special color) and black steps or cast flush white trim (or special color). Choice of tempered prismatic lens or fresnel lens.

BALLAST:
Thermally protected electronic ballast included with housing. Accessible from below ceiling. See reverse side for ballast data.

LAMP:
One (1) 150W or 175W ED28 or BT28 coated pulse start metal halide lamp horizontally mounted. Lamp furnished by others.

SOCKET:
MOGUL base porcelain socket with nickel plated screw shell.

INSTALLATION:
C-brackets accept 1 1/2" lathing channels (by others), or Prescolite 24" bar hangers (B24 or B6).

LABELS:
CSA listed for damp locations. Approved for through wiring. Thermally protected. Non-IC rated. EISA compliant.

Note: Requires field adjustment for 2 x 2 installation.
Regressed trim is 13 3/4" sq. Aperture of regressed trim is 11 23/32"

CATALOG NUMBER: EXAMPLE: LFHSQL-H13 175EB 13FSRDOPL

HOUSING	VOLTAGE	HOUSING OPTIONS	TRIM	TRIM	TRIM OPTIONS	ACCESSORIES
(E) ❑ **LFHSQL-H13-150EB** 13" lensed square MH downlight, (1) 150W mogul base	❑ **120V**	❑ **DCB** Auxiliary socket (see note on back page)	**Flush Mounted Trim**	**Stepped Regressed Trim**	❑ **TLG** Trim lens gasket (factory installed)	❑ **B24** Set of two (2) 24" bar hangers for T-bar ceilings
(E) ❑ **LFHSQL-H13-175EB** 13" lensed square MH downlight, (1) 175W mogul base	❑ **277V**	❑ **FSDFA** Fuse kit installed at factory	❑ **13RALT**[1] Lens frame only	❑ **13FSRDOPL** Lens frame and drop opal glass lens	❑ **TPS** Tamper resistant (factory installed)	❑ **B6** Set of two (2) bar hangers for ceiling joists up to 24" centers
		❑ **QR** Quartz restrike (see note on back page)	❑ **13FFL**[2] Fresnel glass lens only	❑ **13FSRFRL** Lens frame and fresnel glass lens	❑ **TRG** Trim ring gasket (factory installed)	❑ **FSDFI** Fuse kit for field installation
			❑ **13TPRL**[2] Tempered prismatic glass lens only	❑ **13FSRTPRL** Lens frame and tempered prismaticl glass lens		

(E) EISA Compliant

[1]Flush mounted trim lens frame and glass lens must be ordered separately.
[2]Glass lens option for use with 13RALT only.

prescolite
A Division of Hubbell Lighting, Inc.

In a continuing effort to offer the best product possible we reserve the right to change, without notice, specifications or materials that in our opinion will not alter the function of the product.
Web: **www.prescolite.com** • Tech Support: **(888) 777-4832**

LFR-HID-011

PHOTOMETRIC DATA

LiteFrame® - 13" Lensed Square MH Downlight - LFHSQL-H13

BALLAST DATA	150W		175W	
	120V	***277V***	***120V***	***277V***
Total Factor	>90%	>90%	>90%	>90%
Regulation: Line Voltage	+ -5%	+ -5%	+ -5%	+ -5%
Output Wattage	+ -10%	+ -10%	+ -10%	+ -10%
Min. Ambient Starting Temp.	-30°C	-30°C	-30°C	-30°C
Input Watts	165W	161W	194W	191W
Input Amps	1.38amp	.59amp	1.62 amp	.69 amp
Sound Rating	A	A	A	A

LAMP DATA		
Rated Watts	150W	175W
Rated Lumens	9,100	12,800
Efficacy (LPW)	60	72
Rated Life	12,000	11,500
CRI	75	60

NOTES

The DCB option uses a quartz T-4 lamp to provide emergency light during power outages. The DCB socket must be field wired into an auxiliary emergency power supply circuit for emergency use.

Refer to www.prescolite.com for additional photometric tests (IES Files).

The QR option uses a quartz T-4 lamp to provide light continuously during cold start or hot restrike until the HID lamp is at approximately 70% or more of its rated light output.

prescolite

Web: **www.prescolite.com** • Tech Support: **(888) 777-4832**
701 Millennium Blvd., Greenville, SC 29607 U.S.A. • Phone (864) 678-1000
Copyright ©2010 Prescolite, Inc., a division of Hubbell Lighting, Inc. All Rights Reserved
Specifications subject to change without notice. • Printed in U.S.A. LFR-HID-011•6/11/10

HUBBELL®
Hubbell Lighting, Inc.

Grandlite®

Item No.: ***AR816-SF***

Applications

For walkways, driveways, tennis courts, malls, shopping centers, commercial and industrial complexes, residential areas, and parkway lighting.

Specification Features

- UL and CUL listed for wet location
- Heavy duty die-cast aluminum housing
- Heat and impact resistant tempered glass lens
- Standard with mogul base socket-E39, 4KV, UL approved
- Polyester powder paint finish standard for architectural metallic bronze finish
- A silicone gasket for weather seal
- Ideal for HPS and MH 400 Watts Max

Engineering Dimensions

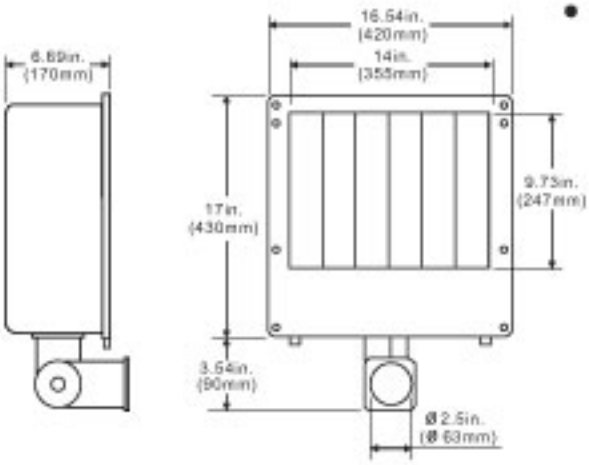

Line Drawing

Assembly Parts

Vandal Shield

Wire Guard

Visor

COMMERCIAL LIGHTING INDUSTRIES

JOB NAME
MENARD INC.
CATALOG NO.
AR816SFP350
TYPE
PALLET RACK AND WOOD POLES

Packing Information

Weights	Cubit Feet	Master Carton Qty	40'Container Qty
21.25LBS	2.325'	1 PC	850 PCS

LISTED

Grandlite®

Item No.: *AR816-PM*

Applications

For walkways, driveways, tennis courts, malls, shopping centers, commercial and industrial complexes, residential areas, and parkway lighting.

Specification Features

- UL and CUL listed for wet location
- Heavy duty die-cast aluminum housing
- Heat and impact resistant tempered glass lens
- Standard with mogul base socket-E39, 4KV, UL approved
- Polyester powder paint finish standard for architectural metallic bronze finish
- A silicone gasket for weather seal
- Ideal for HPS and MH 400 Watts Max

Engineering Dimensions

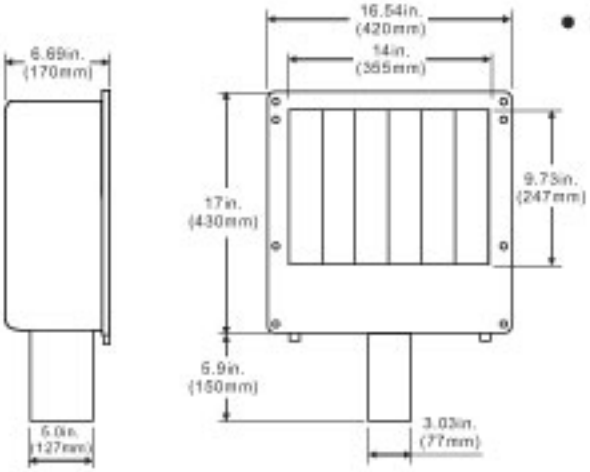

Line Drawing

Assembly Parts

Vandal Shield

Wire Guard

Visor

COMMERCIAL LIGHTING INDUSTRIES

JOB NAME
MENARD INC.
CATALOG NO.
AR816PM350GREEN
TYPE
PARKING LOT HEAD CUSTOM GREEN FINISH

Packing Information

Weights	Cubit Feet	Master Carton Qty	40'Container Qty
20.64LBS	2.372'	1 PC	830 PCS

Grandlite®

Item No.: *AR816-PM*

Applications

For walkways, driveways, tennis courts, malls, shopping centers, commercial and industrial complexes, residential areas, and parkway lighting.

Specification Features

- UL and CUL listed for wet location
- Heavy duty die-cast aluminum housing
- Heat and impact resistant tempered glass lens
- Standard with mogul base socket-E39, 4KV, UL approved
- Polyester powder paint finish standard for architectural metallic bronze finish
- A silicone gasket for weather seal
- Ideal for HPS and MH 400 Watts Max

Engineering Dimensions

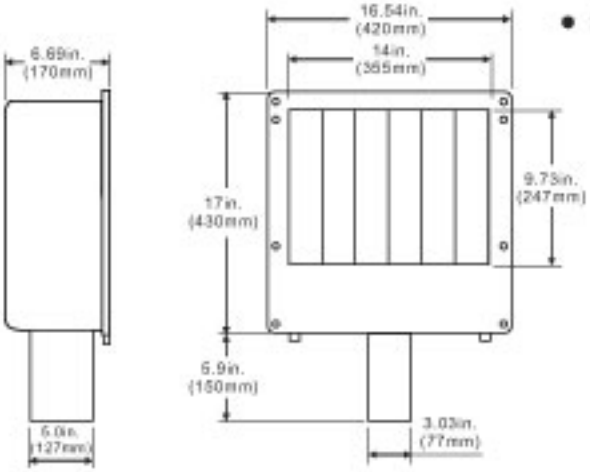

Line Drawing

Assembly Parts

Vandal Shield | Wire Guard | Visor

COMMERCIAL LIGHTING INDUSTRIES

JOB NAME
MENARD INC.
CATALOG NO.
AR816H35MPB
TYPE
PERIMETER LIGHTING NO ARM

Packing Information

Weights	Cubit Feet	Master Carton Qty	40'Container Qty
20.64LBS	2.372'	1 PC	830 PCS

LISTED

505 South Yorbita Road
City of Industry, CA 91744

Tel:001-626-839-8868
Fax:001-626-581-8099
E-mail: sales@grandlite.com

Area Mounting Contents

AR-SQ-4TENON90

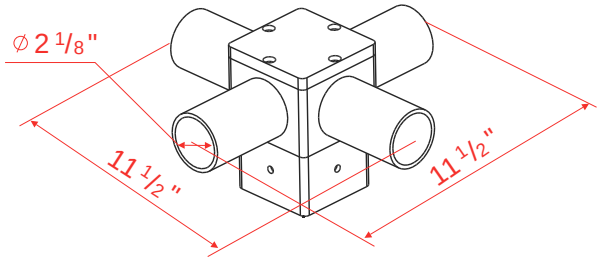

AR-SQ-BRK

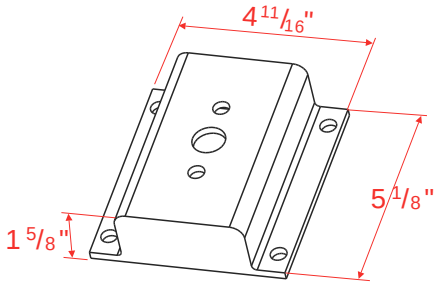

AR-SQ-BRK-TENON

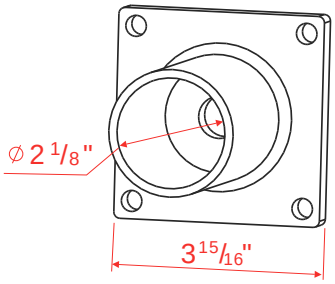

AR-SQ-LBK-TENON

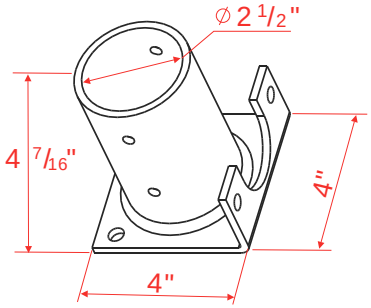

AR-SQ-BRK-LTNO

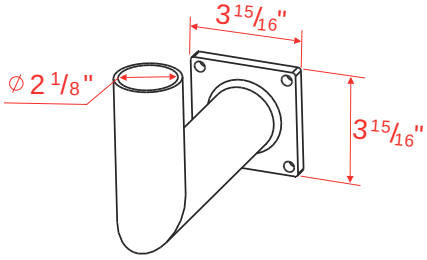

AR-SQ-BRK-LRTNO

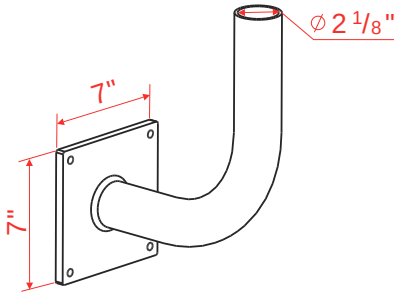

COMMERCIAL LIGHTING INDUSTRIES	**JOB NAME**
	MENARD INC.
	CATALOG NO.
	ARSQBRK
	TYPE
	PERIMETER LIGHTING WALL BRACKET

JOB NAME
MENARD INC.
CATALOG NO.
SS5001130-CC-DM10-BC-VD
TYPE
SITE LIGHTING POLE

COMMERCIAL LIGHTING INDUSTRIES

WJM

SQUARE NON-TAPERED STEEL (SS)

POLE SHAFT

The pole shaft is one piece construction, being fabricated from a weldable grade carbon steel structural tubing which has a uniform wall thickness of 11 gauge (0.1196"). The pole shaft material shall conform to ASTM A-500 Grade C with a minimum yield strength of 50,000 psi. The pole shaft has a full length longitudinal resistance weld and is uniformly square in cross-section with flat sides, small corner radii and excellent torsional properties.

BASE PLATE

The anchor base is fabricated from structural quality hot rolled carbon steel plate that meets or exceeds a minimum yield strength of 36,000 psi. The anchor base telescopes the pole shaft and is circumferentially welded top and bottom. All welds are performed in accordance with the American Welding Society specification AWS D1.1, latest edition.

HANDHOLE

An oval reinforced gasketed handhole, having a nominal 3" x 5" inside opening, located 1'-6" above base, is standard on all poles. Optional 5" x 8" and 4" x 10" handholes are available. A grounding provision is located inside the handhole ring.

FINISH

Color to be determined.

NOTES: all poles to have 1" AB bolts Color- RAL6035

SS5001130-CC-DM10-BC-VD

CATALOG LOGIC	CODE	EXPLANATION
Series:	SS	Square Non-Tapered Steel Poles
Base Diameter:	500	5.0" Base Bottom Diameter
Gauge:	11	11 gauge thickness
Nominal Height:	30	30 feet tall
Finish:	(F)	Color to be determined
Mounting Designation:	DM10	Drilled for 1 Luminaire
Options:	BC, VD	Base Cover, Vibration Dampner

HEIGHT (ft.)	POLE SHAFT (in.) x (ft.)	GAUGE	HANDHOLE SIZE (in.)	ANCHOR BOLT (in.) x (in.) x (in.)	BOLT CIRCLE (in.)
30	5.0 x 30.0	11	3" x 5"	1.00 x 36 x 4	11

EPA	80 MPH (ft.²)	90 MPH (ft.²)	100 MPH (ft.²)	WEIGHT	SHIP WT. (lbs.)
	6	3	1		315

Submitted by Enterprise Lighting, LTD.

Enterprise Lighting Ltd
Manufacturers' Representative

Job Name:
Menards - Blanket 2010

Catalog Number:
2GR8-432A-UNV-EB81-U

Notes:

Type:

ELL10-10457

METALUX®

DESCRIPTION

The GR8 is a T8-dedicated lensed troffer designed to offer premium performance in a low profile housing. T8 dedication and optimized lamp to lens spacing provides the best in energy efficiency and optical control. The GR8's shallow, low profile housing is compatible with even highly restrictive plenums. Luminaires are compatible with today's popular ceiling systems.

APPLICATION

The GR8 offers great performance and great quality. The series is an excellent choice for commercial offices, schools, hospitals, retail merchandising and many other applications.

Catalog #	Type
Project	
Comments	
Prepared by	Date

SPECIFICATION FEATURES

A···Construction
Unitized low profile recessed housing is die formed of code gauge prime cold rolled steel with full length stiffeners and mechanical endplate attachment for added strength. Ballast cover is easily removed without tools. Die formed captive lampholder bracket fully encloses lampholder wiring for easy lampholder replacement. Ample KOs are provided for continuous row wiring. Built-in grid-lock feature for safety and convenience. Standard unit is NYC Approved. (No modifications necessary).

B···Electrical**
Ballasts are CBM/ETL Class "P" and are positively secured by mounting bolts. Pressure lock lampholders. UL/CUL listed. Suitable for damp locations.

C···Finish
Multistage, iron phosphate pretreatment ensures maximum bonding and rust inhibition. Lighting grade baked white enamel finish with premium reflectance for high efficiency.

D···Hinging/Latching
Positive spring loaded cam action steel latches and safety lock T-hinges provide secure, high quality door fit and allow hinging and latching from either side.

E···Frame/Shielding
Heavy gauge flat steel door is die formed with reinforced mitered corners. Housing and door frame assemblies incorporate full length and width mechanical light traps. Light stabilized, acrylic prismatic lens.

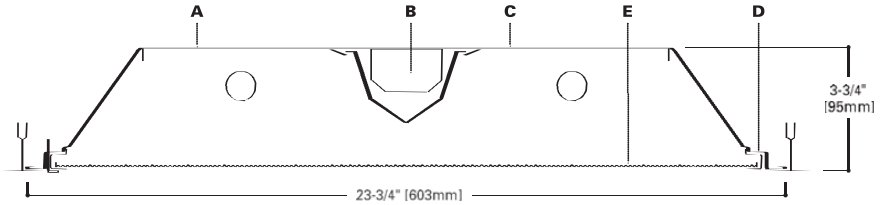

2GR8232
432

2' X 4' TROFFER
2 OR 4 LAMP

General Purpose
T8 Commercial Troffer

MOUNTING DATA

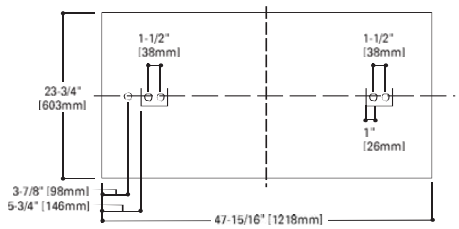

LAMP CONFIGURATIONS

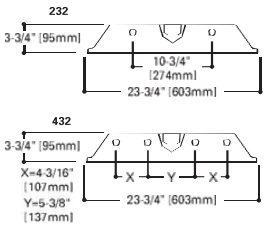

DOOR FRAMES

2GR8
Flat, White
Steel (White
Latches)

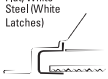

CEILING COMPATIBILITY

G
Grid/Lay-in
Standard

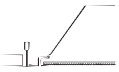

G
Concealed T

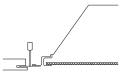

G
Slot Grid

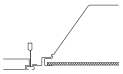

F
Flange Trim
With Supporting
Swing Gates

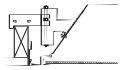

Ceiling Type	Trim Type
Exposed Grid	G
Concealed T	G
Slot Grid	G
Flange	G***

ENERGY DATA

Input Watts:
EB Ballast & STD Lamps
232 (61)
432 (122)

ES Ballast & STD Lamps
232 (71)
432 (142)

Luminaire Efficacy Rating
LER = FL-67
Catalog Number: 2GR8-232A

Yearly Cost of 1000 lumens, 3000 hrs at .08 KWH = $3.58

Luminaire Efficacy Rating
LER = FL-68
Catalog Number: 2GR8-432A

Yearly Cost of 1000 lumens, 3000 hrs at .08 KWH = $3.53

*Standard G (Grid) Type Fixtures can be field converted by adding trim kits. See Compatibility Section or Consult Factory.

**Reference the lamp/ballast data in the Technical Section for specific lamp/ballast requirements.

***Order FCS-24W-U Flange Kit for installation in drywall ceiling. See options and accessories compatibility section.

COOPER LIGHTING

ADF012707

Submitted by Enterprise Lighting, LTD.

Enterprise Lighting Ltd
Manufacturers' Representative

Job Name:
Menards - Blanket 2010

Catalog Number:
2GR8-432A-UNV-EB81-U

Notes:

Type:

ELL10-10457

PHOTOMETRICS

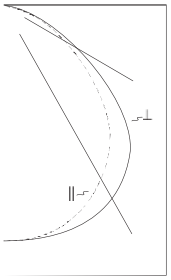

2GR8-232A
Electronic Ballast
F32T8/35K lamps
2800 lumens
Spacing criterion: (II) 1.2 x mounting height, (⊥) 1.4 x mounting height
Efficiency 79.8%
Test Report: 2GR8232A.IES
LER = FL-67
Yearly Cost of 1000 lumens, 3000 hrs at .08 KWH = $3.58

Candela

Angle	Along II	45°	Across ⊥
0	1697	1697	1697
5	1689	1696	1705
10	1669	1685	1703
15	1636	1665	1694
20	1586	1632	1673
25	1518	1582	1634
30	1430	1512	1582
35	1320	1427	1517
40	1188	1318	1422
45	1031	1162	1271
50	843	964	1046
55	657	740	796
60	501	528	581
65	378	353	405
70	277	232	294
75	196	172	231
80	143	144	176
85	77	85	97
90	0	0	0

Coefficients of Utilization

Effective floor cavity reflectance 20%

rc	80%				70%				50%			30%			10%			0%
rw	70	50	30	10	70	50	30	10	50	30	10	50	30	10	50	30	10	0
RCR																		
0	95	95	95	95	93	93	93	93	89	89	89	85	85	85	81	81	81	80
1	88	85	82	79	86	83	80	78	79	77	75	76	74	73	73	72	71	69
2	81	75	70	66	79	74	69	66	71	67	64	68	65	63	66	64	61	60
3	75	67	62	57	73	66	61	56	64	59	55	62	58	55	60	56	54	52
4	69	60	54	49	67	59	53	49	57	52	48	56	51	47	54	50	47	45
5	63	54	47	42	62	53	47	42	51	46	42	50	45	41	48	44	41	39
6	58	48	42	37	57	48	41	37	46	41	36	45	40	36	44	39	36	34
7	54	44	37	32	53	43	37	32	42	36	32	41	35	32	40	35	31	30
8	50	39	32	28	48	39	32	28	38	32	28	37	31	28	36	31	27	26
9	46	35	29	24	45	35	28	24	34	28	24	33	28	24	32	27	24	22
10	42	32	26	21	41	31	25	21	31	25	21	30	25	21	29	24	21	20

Zonal Lumen Summary

Zone	Lumens	%Lamp	%Fixture
0-30	1360	24.3	30.4
0-40	2249	40.2	50.3
0-60	3788	67.6	84.7
0-90	4471	79.8	100.0
0-180	4471	79.8	100.0

Typical VCP Percentages

	Height Along		Height Across	
Room Size (Ft.)	8.5′	10.0′	8.5′	10.0′
20 x 20	73	77	71	75
30 x 30	68	72	65	69
30 x 60	60	63	56	59
60 x 30	69	73	68	71
60 x 60	60	63	57	60

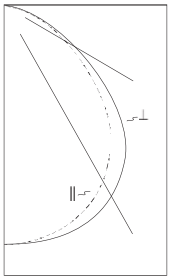

2GR8-432A
Electronic Ballast
F32T8/35K lamps
2800 lumens
Spacing criterion: (II) 1.2 x mounting height, (⊥) 1.4 x mounting height
Efficiency 75.5%
Test Report: 2GR8432A.IES
LER = FL-68
Yearly Cost of 1000 lumens, 3000 hrs at .08 KWH = $3.53

Candela

Angle	Along II	45°	Across ⊥
0	3299	3299	3299
5	3281	3295	3310
10	3241	3274	3306
15	3176	3233	3284
20	3079	3164	3236
25	2946	3059	3145
30	2772	2911	3012
35	2555	2721	2841
40	2296	2480	2612
45	1989	2162	2293
50	1621	1770	1890
55	1262	1357	1442
60	957	970	1043
65	716	649	736
70	520	430	542
75	368	321	427
80	269	269	327
85	147	160	185
90	0	0	0

Coefficients of Utilization

Effective floor cavity reflectance 20%

rc	80%				70%				50%			30%			10%			0%
rw	70	50	30	10	70	50	30	10	50	30	10	50	30	10	50	30	10	0
RCR																		
0	90	90	90	90	88	88	88	88	84	84	84	80	80	80	77	77	77	75
1	83	80	77	75	81	78	76	73	75	73	71	72	71	69	70	68	67	65
2	77	71	67	63	75	70	66	62	67	64	61	65	62	59	63	60	58	57
3	71	64	58	54	69	63	58	54	61	56	53	59	55	52	57	54	51	49
4	65	57	51	47	64	56	51	46	54	50	46	53	49	45	51	48	45	43
5	60	51	45	40	59	50	44	40	49	44	40	47	43	39	46	42	39	37
6	56	46	40	35	54	45	39	35	44	39	35	43	38	34	42	37	34	33
7	51	42	35	31	50	41	35	31	40	34	30	39	34	30	38	33	30	29
8	47	37	31	27	46	37	31	27	36	30	27	35	30	26	34	30	26	25
9	43	33	27	23	42	33	27	23	32	27	23	31	26	23	31	26	23	21
10	40	30	24	21	39	30	24	20	29	24	20	29	24	20	28	23	20	19

Zonal Lumen Summary

Zone	Lumens	%Lamp	%Fixture
0-30	2634	23.5	31.2
0-40	4327	38.6	51.2
0-60	7184	64.1	85.0
0-90	8452	75.5	100.0
0-180	8452	75.5	100.0

Typical VCP Percentages

	Height Along		Height Across	
Room Size (Ft.)	8.5′	10.0′	8.5′	10.0′
20 x 20	60	65	58	62
30 x 30	54	58	51	55
30 x 60	45	48	40	44
60 x 30	55	59	53	58
60 x 60	45	48	42	45

ORDERING INFORMATION

SAMPLE NUMBER: 2GR8-232A-120V-EB81-U

2=2' Width

Series
GR8=General Purpose T8 Commercial Troffer[1]

Number of Lamps[2]
2 or **4** Lamps
(Not included)

Wattage (Length)
32=32W T8 (48")

A=#12 Pattern Acrylic
A125=#12 Pattern Acrylic (.125" Thick)
A19/156=#19 Pattern Acrylic (.156" Thick)
IMA 48=Injection Moldeed Acrylic (.150" Thick)
PB1S=Silver Parabolic Louver (1/2" x 1/2" x 1/2")
(Additional shielding media available, see accessory section)

Voltage[3]
120V=120 Volt
277V=277 Volt
347V=347 Volt
UNV=Universal Voltage 120-277[4]

Options
GL=Single Element Fuse
GM=Double Element Fuse
Lamps=Lamps Installed
Flex=Flex Installed
Emergency=EM Installed

Ballast Type[3]
Blank=Standard Magnetic Ballast (Biax & 20W)
LEOC8=T8 Magnetic Energy Saving
ER8_=T8 Electronic Program Rapid Start. Total Harmonic Distortion < 10%
No. of Ballast 1, 2 or 3
EB8_=T8 Electronic Instant Start. Total Harmonic Distortion < 20%
No. of Ballast 1, 2 or 3
EB8_/PLUS=T8 Electronic Instant Start. High Ballast Factor >1.13. Total Harmonic Distortion < 20%
No. of Ballast 1, 2 or 3
TEB8_=T8 Electronic Instant Start. Total Harmonic Distortion < 10%
No. of Ballast 1, 2 or 3
DLS=Digital Lighting System Dimming

Options
FCS-24W-U=Field Installed Flange Kit
FR=Suitable for Fire Rated Applications
EQ=T-BAR Safety Earthquake Clips[1]
(See options & accessories)

Packaging
U=Unit Pack

NOTES: [1]An EQ Grid Clip is recommended for all 9/16" ceiling systems. [2]Standard off-center ballast compartment on 3-lamp fixtures. [3]Products also available in non-US voltages and frequencies for international markets. [4]Not available when specifying emergencies, voltage must be specific.

For complete product data, reference the Fluorescent Specification binder. Specifications & dimensions subject to change without notice. Consult your Cooper Lighting Representative for availability and ordering information.

SHIPPING INFORMATION

Catalog No.	Wt.
2GR8-232A	29 lbs.
2GR8-432A	29 lbs.

Submitted by Enterprise Lighting, LTD.			
Enterprise Lighting Ltd Manufacturers' Representative	**Job Name:** Menards - Blanket 2010	**Catalog Number:** 8TICF-SS-232-UNV-EB81-U Notes:	**Type:** ELL10-10457

COOPER LIGHTING - METALUX®

DESCRIPTION

The IAF Series is an energy efficient family of light duty industrials that feature premium performance and durability. The series incorporates sturdy embossed reflectors that precisely direct and effectively control light. The IAF Series can be installed using various mounting methods and numerous options and accessories are available. The series is available with both Apertured (IAF) and Closed Top (ICF) reflector combinations.

The IAF Series can be utilized in simple task and area lighting and industrial applications.

Catalog #		Type
Project		
Comments		Date
Prepared by		

SPECIFICATION FEATURES

A···Construction

Nominal Channel is code gauge prime cold rolled steel. Numerous KOs for ease of installation. End plate quickly connects to channel connector. Groove for tong hanger lamp holder bracket flips in place.

B···Electrical*

Ballast are CBM/ETL Class "P" and positively secured by mounting bolts. UL/CUL listed. Suitable for damp locations.

C···Finish

Multistage iron phosphate pre-treatment ensures maximum bonding and rust inhibitor. Lighting grade, baked white enamel finish.

D···Reflectors

Die formed prime steel, code gauge. Formed edges for added strength. 12" width. Reflectors secured with quarter-turn fasteners. All reflectors 4' sections. Baked white enamel. Standard with 8% uplight (IAF). Closed top reflector (ICF). Optional industrial fixtures are available incorporating silver technology enhancements. (SilverLining)

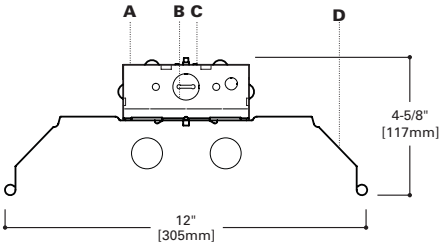

LAMP CONFIGURATIONS

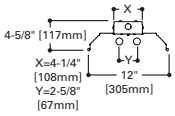

MOUNTING DATA

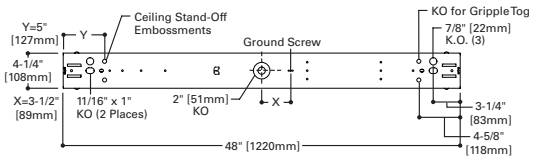

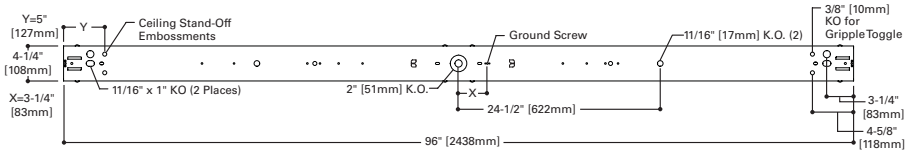

IAF, ICF

228T8, 232
248HO, 296HO
248T8HO
296T8HO
248, 296
296T8

4' OR 8' INDUSTRIAL
2 OR 3 LAMPS

T8, HIGH OUTPUT, SLIMLINE

Light Duty Industrial

ENERGY DATA

Input Watts:
HB Ballast, Normal Ballast Factor
228T8 (49), 232 (53)
Luminaire Efficacy Rating
LER = FL-79
Catalog Number: IAF-232

EB Ballast & STD Lamps
248T8HO (99), 296HO (208), 296T8HO (160), 248 (74), 296 (136), 296 (136)

ES Ballast & STD
296 (158)

STD Ballast & STD Lamps
248HO (145), 248 (102)
Luminaire Efficacy Rating
LER = FL-54
Catalog Number: IAF-296HO

Yearly Cost of 1000 lumens, 3000 hrs at .08 KWH = $4.44

*Reference the lamp/ballast data in the Technical Section for specific lamp/ballast requirements.

LAMPS CONTAIN MERCURY. DISPOSE ACCORDING TO LOCAL, STATE OR FEDERAL LAWS

LINEAR DISCONNECT
Safe and convenient means of disconnecting power.

ADF090176

Submitted by Enterprise Lighting, LTD.

Enterprise Lighting Ltd
Manufacturers' Representative

Job Name:
Menards - Blanket 2010

Catalog Number:
8TICF-SS-232-UNV-EB81-U

Notes:

Type:

ELL10-10457

PHOTOMETRICS

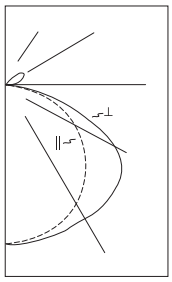

IA-296HO
Standard Ballast
F96T12/CW/HO/WM Lamps
8000 Lumens

Spacing criterion: (II) 1.3 x mounting height, (⊥) 1.5 x mounting height

Efficiency 84.1%

Test Report: IA296HO.IES

LER = FI-54

Yearly Cost of 1000 lumens, 3000 hrs at .08 KWH = $4.44

Coefficients of Utilization

Effective floor cavity reflectance 20%

rc	80%				70%				50%			30%			10%			0%
rw	70	50	30	10	70	50	30	10	50	30	10	50	30	10	50	30	10	0
RCR																		
0	99	99	99	99	96	96	96	96	90	90	90	85	85	85	81	81	81	79
1	90	85	81	78	87	83	79	76	78	75	73	74	72	70	70	68	67	64
2	81	73	67	62	78	71	66	61	67	63	59	64	60	57	60	57	54	52
3	73	64	56	51	70	62	55	50	59	53	48	55	51	47	53	49	45	43
4	66	56	48	42	64	54	47	42	51	45	40	49	44	39	46	42	38	36
5	61	49	42	36	59	48	41	35	46	39	34	43	38	33	41	36	33	31
6	56	44	36	31	54	43	36	30	41	34	30	39	33	29	37	32	28	26
7	52	40	32	27	50	39	32	27	37	31	26	35	30	25	34	29	25	23
8	48	36	29	24	46	35	28	23	34	27	23	32	27	22	31	26	22	20
9	45	33	26	21	43	32	26	21	31	25	20	30	24	20	28	23	20	18
10	42	30	23	19	40	30	23	19	28	23	18	27	22	18	26	21	18	16

Zonal Lumen Summary

Zone	Lumens	%Lamp	%Fixture
0-30	2809	17.6	20.9
0-40	4765	29.8	35.4
0-60	9282	58.0	69.0
0-90	12575	78.6	93.5
90-180	878	5.5	6.5
0-180	13453	84.1	100.0

Candela

Angle	Along II	45°	Across ⊥
0	3478	3478	3478
10	3453	3446	3513
20	3288	3355	3468
30	3025	3194	3438
40	2657	3014	3378
50	2207	2785	3228
60	1666	2443	2687
70	1051	1674	1524
80	413	586	450
90	10	32	23
100	5	176	182
110	6	298	342
120	8	285	458
130	9	170	371
140	13	63	209
150	14	18	70
160	12	12	14
170	11	11	11
180	10	10	10

ORDERING INFORMATION

SAMPLE NUMBER: IAF-296T8HO-120V-U

Tandem
Blank=4' Length
8T=8' Length

Series
IAF=Apertured Reflector
ICF=Closed Top Reflector

SilverLining
SS=Silver-Lining Housing and Ballast Cover[5]

Number of Lamps
2=Lamps (Not Included)

Wattage
28T8=28W T8 (48")[4]
32=32W T8 (48")
48HO=60W T12 (48") HO
48T8HO=44W T8 (48") HO
96HO=95/110W T12 (96") HO
96T8HO=86W T8 (96") HO
48=40W T12 (48") SL
96=60/75W T12 (72") SL
96=59W T8 (96") SL

Voltage[1]
120V=120 Volt
277V=277 Volt
347V=347 Volt
UNV=Universal Voltage 120-277[2]

Options
GL=Single Element Fuse
GM=Double Element Fuse
EL4=Emergency Installed
EL8=Emergency Installed

Ballast Type[1]
EB2_=T12 Electronic Rapid Start.
No. of Ballast 1 or 2

EB8_=T8 Electronic Instant Start. Total Harmonic Distortion < 10%
No. of Ballast 1 or 2

EB8_/PLUS=T8 Electronic Instant Start. High Ballast Factor >1.13. Total Harmonic Distortion < 10%
No. of Ballast 1 or 2

ER8_=T8 Electronic Program Rapid Start. Total Harmonic Distortion < 10%
No. of Ballast 1 or 2

ER8_/PLUS=T8 Electronic Program Start. High Ballast Factor >1.13. Total Harmonic Distortion < 10%
No. of Ballast 1 or 2

HPT8 Ballast
Ballast
HB8_L=T8 Electronic Instant Start. Low Ballast Factor .77
HB8_=T8 Electronic Instant Start. Ballast Factor .88
HB8_N=T8 Electronic Instant Start. Normal Ballast Factor 1.0
HB8_H=T8 Electronic Instant Start. High Ballast Factor 1.15-1.2
HR8_DIM=T8 Electronic Program Start Step Dimming. Ballast Factor .88
HR8_L=T8 Electronic Program Start. Low Ballast Factor .77
HR8_=T8 Electronic Program Start. Ballast Factor .88
HR8_H=T8 Electronic Program Start. High Ballast Factor 1.15-1.2

Options
RIF1=Radio Interference Suppressor
6-3/18 SJT-C&P-515P=Cord & Plug (120V), (15 AMP)[3]
6-3/18 SJT-C&P-L715P=Cord & Plug (277V), (15 AMP)[3]
PI/CPI=Plug-In Option[4]
TILW=Tandem In-Line Wiring Option (Consult TILW Option Catalog Page)[3]
(See options & accessories)

Packaging
U=Unit Pack
4B=4 Bulk

ACCESSORIES (Order Separately)

A-1-B/Spacer-U=Spacer 1-1/2" to 2-1/2" from ceiling (Use 2 per fixture)
GRP-SSF=Gripper Hanger (Use 2 per fixture)
SCF=Fixed Stem Set (Specify Length)
SCS=Swivel Stem Set (Specify Length)
SCA=Adjustable 48" Stem Set
AYC-Chain/Set-U=Chain Hanger Set (Use 1 set per fixture)
WG/ICF-4FT-U[2]=Wire Guard
CLC-SSF=Long Channel Connector SSF
TOGGLE=Single Toggle NO. 2 (Specify Length)
Y-TOGGLE=Y Toggle NO. 2 (Specify Length)

NOTES: [1]Products also available in non-US voltages and frequencies for international markets. [2]Not available when specifying emergencies, voltage must be specific. Exception EL4. [3]Socket brackets left uninstalled. [4]When utilizing 28W T8 lamps, HPT8 Ballast must be specified. [5]Not available with HO lamps.

Specifications & dimensions subject to change without notice. Consult your Cooper Lighting Representative for availability and ordering information.

SHIPPING INFORMATION

Catalog No.	Wt.
IAF-232	13 lbs.
8TIAF-232	26 lbs.

Submitted by Enterprise Lighting, LTD.			
Enterprise Lighting Ltd Manufacturers' Representative	**Job Name:** Menards - Blanket 2010	**Catalog Number:** 8TSSF-132-UNV-EB81-U/(2)SSF-REV-4-B Notes:	**Type:** ELL10-10457

COOPER LIGHTING - METALUX®

DESCRIPTION

The SSF Series is a functional and multi-purpose standard strip family that incorporates premium performance and construction durability. Designed with our easy-to-use Flip-Up socket design, the SSF significantly reduces installation time. The performance and application versatility of this series can be increased by incorporating symmetrical or asymmetrical reflectors. The SSF Series can be installed using various mounting methods and numerous options and accessories are available. The SSF Series can be the illumination solution in commercial, industrial, retail and residential applications. Fixtures can be used in storage/utility areas, coves, display cases, shops, task and general area lighting.

Catalog #		Type
Project		
Comments		Date
Prepared by		

SSF
117, 125
128T8
132, 217, 225
228T8
232
328T8
332

2', 3' OR 4' STRIP
1, 2 OR 3 T8 LAMPS

Standard Striplite

SPECIFICATION FEATURES

A···Construction

Channel die cold rolled steel with numerous KOs for ease of installation. Groove for Tong Hanger. End plate quickly converts to snap-in channel connector for continuous row alignment. Lamp holder bracket flips in place. Channel/wireway cover secured with quarter-turn fasteners.

B···Electrical*

Ballasts are CBM/ETL Class "P" and are positively secured by mounting bolts. Rotor Lock lampholders. UL/CUL listed. Suitable for damp locations.

C···Finish

Multistage iron phosphate pretreatment ensures maximum bonding and rust inhibitor. Lighting upgrade, baked white enamel finish. Prepainted material is standard, PAF optional.

D···Channel/Wireway Cover

Die formed heavy gauge steel. Tight fit for ease of maintenance. Easily removed without use of tools. Optional reflector available incorporating silver technology enhancements (Silver Lining). Consult Pre Sales Technical Support.

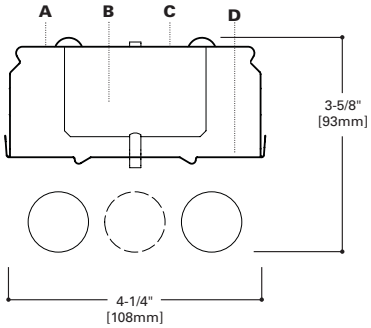

LAMP CONFIGURATIONS

MOUNTING DATA

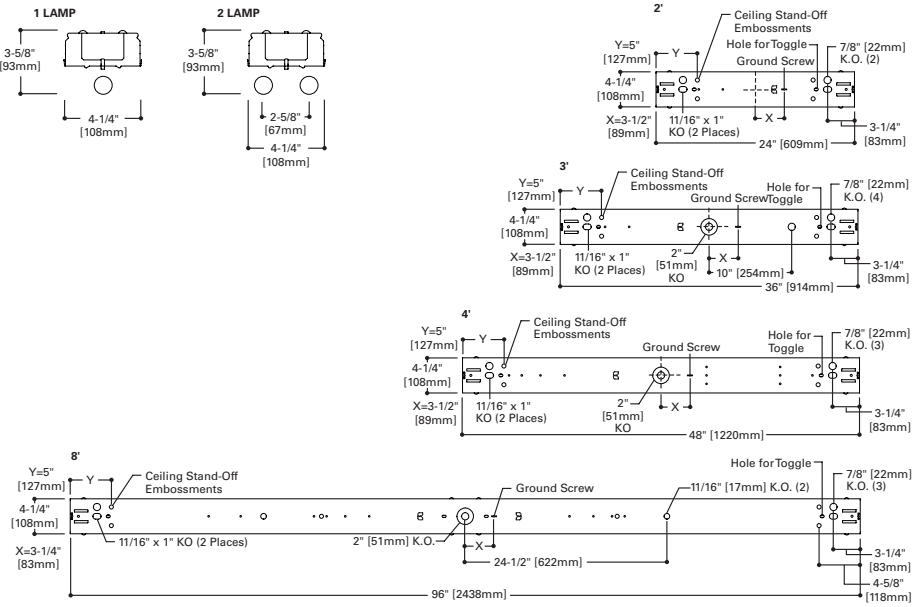

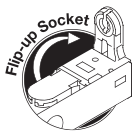

ENERGY DATA

Input Watts:
EB Ballasts Normal Ballast Factor
117 (20), 217 (34), 125 (23), 128T8 (25), 132 (28), 225 (53), 228T8 (49), 232 (58)
EB Ballasts Low Ballast Factor
125 (21), 128T8 (22), 132 (25), 225 (40), 228T8 (44), 232 (48)

Luminaire Efficacy Rating
LER = FS-88
Catalog Number: SSF-232

Yearly Cost of 1000 lumens, 3000 hrs at .08 KWH = $2.73

(*Reference the lamp/ballast data in the Technical Section for specific lamp/ballast requirements.

LAMPS CONTAIN MERCURY. DISPOSE ACCORDING TO LOCAL, STATE OR FEDERAL LAWS

LINEAR DISCONNECT
Safe and convenient means of disconnecting power.

ADF081661

Submitted by Enterprise Lighting, LTD.

Enterprise Lighting Ltd
Manufacturers' Representative

Job Name:
Menards - Blanket 2010

Catalog Number:
8TSSF-132-UNV-EB81-U/(2)SSF-REV-4-B
Notes:

Type:

ELL10-10457

PHOTOMETRICS

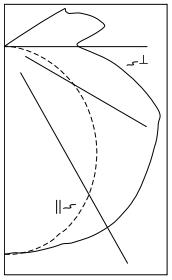

SSF-228T8
Electronic Ballast

F28T8-SP35-UMX-ECO Lamps
2750 Lumens

Spacing criterion: (II) 1.3 x mounting height, (⊥) 1.5 x mounting height

Efficiency 86.2%

Test Report: SS232.IES

LER = FS95

Yearly Cost of 1000 lumens, 3000 hrs at .08 KWH = $2.53

Candlepower

Angle	Along II	45°	Across ⊥
0	929	929	929
5	927	928	927
10	916	925	928
15	896	914	927
20	869	899	936
25	834	888	945
30	792	876	949
35	742	860	946
40	687	837	934
45	627	808	915
50	561	771	889
55	492	727	866
60	418	675	845
65	340	632	818
70	261	598	775
75	181	554	674
80	106	443	568
85	41	340	453
90	5	234	349

Coefficients of Utilization

Effective floor cavity reflectance 20%

rc	80%				70%				50%			30%			10%			0%
rw	70	50	30	10	70	50	30	10	50	30	10	50	30	10	50	30	10	0
RCR																		
0	99	99	99	99	95	95	95	95	88	88	88	81	81	81	75	75	75	73
1	88	83	78	74	84	79	75	71	73	69	66	67	64	62	62	60	58	55
2	79	70	63	57	75	67	61	56	62	57	52	57	53	49	52	49	46	43
3	71	61	53	46	67	58	51	45	53	47	42	49	44	40	45	41	37	35
4	64	53	45	38	61	51	43	37	47	40	35	43	38	33	40	35	31	29
5	59	47	38	32	56	45	37	31	42	35	30	38	33	28	35	31	27	24
6	54	42	34	28	51	40	33	27	37	31	26	34	29	24	32	27	23	21
7	50	38	30	24	48	36	29	23	34	27	22	31	26	21	29	24	20	18
8	46	34	26	21	44	33	26	21	31	24	20	28	23	19	26	22	18	16
9	43	31	24	19	41	30	23	18	28	22	18	26	21	17	24	20	16	14
10	40	29	22	17	39	28	21	17	26	20	16	24	19	15	23	18	14	13

Zonal Lumen Summary

Zone	Lumens	%Lamp	%Fixture
0-30	758	13.8	16.0
0-40	1291	23.5	27.2
0-60	2533	46.1	53.5
0-90	3988	72.5	84.2
90-180	751	13.6	15.8
0-180	4739	86.2	100.0

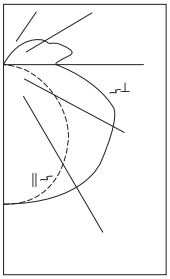

SSF-232
Electronic Ballast

FO32T8 Lamps
2900 Lumens

Spacing criterion: (II) 1.3 x mounting height, (⊥) 1.6 x mounting height

Efficiency 91.6%

Test Report: SS232.IES

LER = FS-88

Yearly Cost of 1000 lumens, 3000 hrs at .08 KWH = $2.73

Candlepower

Angle	Along II	45°	Across ⊥
0	1017	1017	1017
5	1007	1010	1021
10	949	985	1030
15	857	951	1042
20	738	906	1029
25	588	830	978
30	422	727	920
35	252	632	834
40	104	456	601
45	0	253	393
50	0	320	518
55	0	246	430
60	0	199	353
65	0	131	263
70	0	69	167
75	0	17	76
80	0	1	7
85	0	0	0
90	0	0	0

Coefficients of Utilization

Effective floor cavity reflectance 20%

rc	80%				70%				50%			30%			10%			0%
rw	70	50	30	10	70	50	30	10	50	30	10	50	30	10	50	30	10	0
RCR																		
0	105	105	105	105	100	100	100	100	92	92	92	84	84	84	77	77	77	74
1	93	87	83	78	88	84	79	75	76	73	70	70	67	64	64	61	59	56
2	83	74	67	61	79	71	65	59	65	60	55	59	55	51	54	51	47	44
3	75	64	56	49	71	62	54	48	56	50	45	51	46	42	47	42	39	36
4	68	56	48	41	65	54	46	40	49	43	37	45	39	35	41	36	32	30
5	62	50	41	35	59	48	40	34	44	37	32	40	34	30	37	32	28	25
6	57	44	36	30	54	43	35	29	39	32	27	36	30	26	33	28	24	22
7	53	40	32	26	50	38	31	25	35	29	24	33	27	22	30	25	21	19
8	49	36	28	23	47	35	27	22	32	26	21	30	24	20	27	22	19	17
9	46	33	25	20	44	32	25	20	30	23	19	27	22	18	25	20	17	15
10	43	30	23	18	41	29	22	18	27	21	17	25	20	16	23	18	15	13

Zonal Lumen Summary

Zone	Lumens	%Lamp	%Fixture
0-30	830	14.3	15.6
0-40	1411	24.3	26.6
0-60	2753	47.5	51.8
0-90	4288	73.9	80.7
90-180	1023	17.6	19.3
0-180	5311	91.6	100.0

ORDERING INFORMATION

SAMPLE NUMBER: SSF-232-UNV-EB81-U

Tandem
Blank=2', 3' or 4' Length
81=8' Length

Series
SSF=Commercial Standard Striplite

Number of Lamps
(Not Included)
1=1 Lamp
2=2 Lamps
3=3 Lamps [1]

Wattage
17=17W T8 (24")
25=25W T8 (36")
28T8=28W T8 (48") [7]
32=32W T8 (48")

Voltage [2]
120V=120 Volt
277V=277 Volt
347V=347 Volt
UNV=Universal Voltage 120-277

Options [2]
GL=Single Element Fuse
GM=Double Element Fuse
EL4=Emergency Installed [4] [5]

Ballast Type [2]
EB8_=T8 Electronic Instant Start. Total Harmonic Distortion < 10%
No. of Ballast
1 or 2

EB8_/PLUS=T8 Electronic Instant Start. High Ballast Factor >1.13. Total Harmonic Distortion < 10%
No. of Ballast
1 or 2

ER8_=T8 Electronic Program Rapid Start. Total Harmonic Distortion < 10%
No. of Ballast
1 or 2

ER8_/PLUS=T8 Electronic Program Start. High Ballast Factor >1.13. Total Harmonic Distortion < 10%
No. of Ballast
1 or 2

HPT8 Ballast
HB8_L=T8 Electronic Instant Start. Low Ballast Factor .77
HB8_=T8 Electronic Instant Start. Ballast Factor .88
HB8_N=T8 Electronic Instant Start. Normal Ballast Factor 1.0
HB8_H=T8 Electronic Instant Start. High Ballast Factor 1.15-1.2
HR8_DIM=T8 Electronic Program Start Step Dimming. Ballast Factor .88
HR8_L=T8 Electronic Program Start. Low Ballast Factor .77 max.
HR8_=T8 Electronic Program Start. Ballast Factor .88
HR8_H=T8 Electronic Program Start. High Ballast Factor 1.15-1.2

Options
RIF1=Radio Interference Suppressor
6-3/18 SJT-C&P-515P=Cord & Plug (120V) (15 AMP) [6]
6-3/18 SJT-C&P-L715P=Cord & Plug (277V) (15 AMP) [6]
PI/CPI=Plug-In Option [6]
TILW=Tandem In-Line Wiring Option (Consult TILW Option Catalog Page) [6]

Packaging
U=Unit Pack
4B=4 Bulk Packing (48" and 96")

ACCESSORIES

(Order Separately)

A1B/Spacer-U=Spacer 1-1/2" to 2-1/2" from ceiling (Use 2 Per Fixture)
GRP-SSF=Gripper Hanger (Use 2 Per Fixture)
AYC-Chain/Set=36" Chain Hanger (Use 1 Set Per Fixture)
SCF=Fixed Stem Set (Specify Length)
SCS=Swivel Stem Set (Specify Length)
SCA=Adjustable 48" Stem Set
CLC-SSF=Long Channel Connector SSF
SSF-ASY-4 [3]=3" Asymmetric Reflector (Specify 2', 3', or 4')
SSF-REV-4 [3]=3" Asymmetric Reverse Reflector SSF (Specify 2', 3', or 4')
SSF-SYM-4 [3]=6" Symmetric Reflector Specify (2', 3' or 4')
ICF-4FT-REFL=12" Symmetric Reflector
WG/SSF-2FT=2' Wire Guard
WG/SSF-3FT=3' Wire Guard
WG/SSF-4FT=4' Wire Guard
TOGGLE=Single Toggle NO. 2 (Specify Length)
Y-TOGGLE=Y Toggle NO. 2 (Specify Length)

(Additional Accessories Available. See Options and Accessories Section.)

SHIPPING INFORMATION

Catalog No.	Wt.
SSF-117	2
SSF-217	7 lbs.
SSF-125	9 lbs.
SSF-225	9 lbs.
SSF-128T8	9 lbs.
SSF-228T8	9 lbs.
SSF-132	7 lbs.
8TSSF-132	16 lbs.
SSF-232	9 lbs.
8TSSF-232	20 lbs.

NOTES: [1]Available in 28T8 and 32 watt. Requires two ballasts for Tandem option. [2]Products also available in non-US voltages and frequencies for international markets. [3]For SilverLining reflector add SS in Catalog Number, Example: SSF-ASY-SS-4. [4]Not available for 2' version. [5]For other emergency options specify manufacturer part number and consult the factory for availability (example: EL-FBP240H). [6]Socket brackets left uninstalled. [7]When utilizing 28W T8 lamps, HPT8 Ballast must be specified. Other ballast restrictions may apply. Consult your Cooper Lighting Representative for availability and ordering information.

Specifications & dimensions subject to change without notice. Consult your Cooper Lighting Representative for availability and ordering information.

Submitted by Enterprise Lighting, LTD.

Enterprise Lighting Ltd
Manufacturers' Representative

Job Name:
Menards - Blanket 2010

Catalog Number:
HUD-150M-MT-LL

Notes:

Type:

ELL10-10457

FAIL-SAFE®

DESCRIPTION

Designed with a vertical burn lamp and symmetrical distribution in wattages up to 175W MH as an unbreakable replacement answer to commercial fixtures which might succumb to vandalism. A corrosion-resistant cast aluminum housing holds a polycarbonate diffuser that fastens with four tamper-resistant screws to prevent unauthorized access. Double gasketing seals out the environment. Specifically designed for use in public access areas where vandalism may occur. Ideal for building perimeters, parking structures, corridors, stairwells, schools and dormitories.

Catalog #		Type
Project		
Comments		Date
Prepared by		

SPECIFICATION FEATURES

Fasteners
Captive, stainless steel T20 tamperproof TORX®-head screws prevent unauthorized access.

Housing
Heavy duty, corrosion resistant cast aluminum housing withstands impact and environmental abuse. Standard bronze polyester powder coat finish.

Gasket
Non-shrinking, double-baked neoprene gasketing seals out the environment.

Lens
Nominal 0.156 UV stabilized, injection-molded, impact-resistant, prismatic polycarbonate refractor for high efficiency, low surface brightness and maximum strength.

Lamp
By others.

Reflector
Spun 0.040 aluminum reflector provides symmetrical distribution. Baked white polyester powder coat finish; minimum reflectance: 93%.

Socket
For use with HID lamps. Porcelain socket, copper screwshell, silicone braid, 150°C. For Metal Halide, protected socket is standard, for use with "O" open-rated, protected Metal Halide lamps only.

Ballast
HPF core and coil.

Labels
UL/cUL listed, standard wet label.

HUD

Induction
Compact Fluorescent
High Pressure Sodium
Pulse Start Metal Halide

Vandal Resistant

SURFACE
Prismatic Polycarbonate

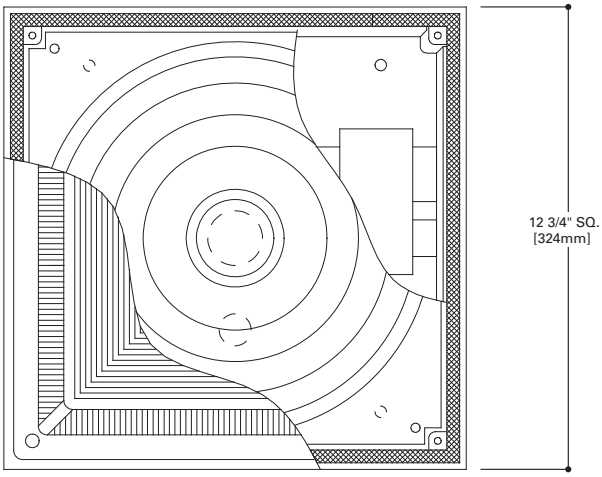

MOUNTING DIMENSIONS

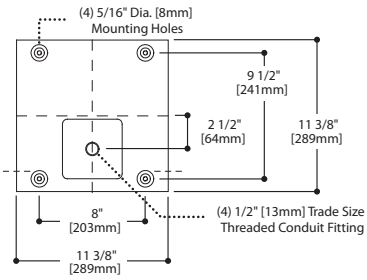

SIDE DIMENSIONS

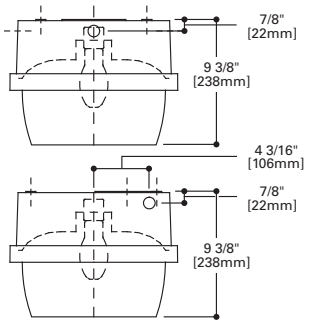

TORX® is a registered trademark of Camcar Division of Textron Inc.

ENERGY DATA

For Energy Management related technical data to support the performance of this fixture series, refer to the ordering information for input wattage.

COOPER Lighting
www.cooperlighting.com

Specifications and dimensions subject to change without notice.
Consult your representative for additional options and finishes.

ADC041543
2011-02-14 09:23:19

Submitted by Enterprise Lighting, LTD.

Enterprise Lighting Ltd
Manufacturers' Representative

Job Name:
Menards - Blanket 2010

Catalog Number:
HUD-150M-MT-LL

Notes:

Type:

ELL10-10457

ORDERING INFORMATION

SAMPLE NUMBER: HUD-175M-277-OR-QRS-BLK

Product Family
HUD=Cast Aluminum Surface Luminaire

Lamp Type
50S=50W HPS Medium Base
70S=70W HPS Medium Base
100S=100W HPS Medium Base
150S=150W HPS Medium Base
50M=50W MP Medium Base [4]
70M=70W MP Medium Base [4]
100M=100W MP Medium Base [4]
150M=150W MP Medium Base [4]
175M=175W MP Medium Base [4]

Fluorescent Source
213=(2) 13W Twin Tube [3]
313=(3) 13W Twin Tube [3]
226=(2) 26W Quad Tube
326=(3) 26W Quad Tube
126PLT=(1) 26W Triple Tube
132PLT=(1) 32W Triple Tube
232PLT=(2) 32W Triple Tube
142PLT=(1) 42W Triple Tube
242PLT=(2) 42W Triple Tube

Induction
55QL= (1) 55W QL Induction
85QL =(1) 85W QL Induction

Voltage [1]
120=120V
208=208V
240=240V
277=277V
DT=Dual-Tap 120/277V
MT=Multi-tap 120/208/240/277V

Socket [1]
OR =Open-rated socket for pulse start metal halide lamps [5]
__ = Non-applicable (HPS or not compatible with OR socket

Options
OPL=Opal Diffuser [2]
QRS=Quartz Restrike System (DC bayonet base; lamp by others)
QS=Quartz Socket Only (DC bayonet base)
SF=Single Fuse
DF=Double Fuse
LL=Lamp Included

Housing Finishes
Blank=Bronze (Standard)
BLK=Black
WHT=White

Accessories
(Order Separately)
VRSD=Torxhead Vandal Resistant Screwdriver
2802=Pendant Mounting Box
2811=Trunion Mounting Kit
2822=Quick Mounting Kit
PB-120=Photocell 120V
PB-277=Photocell 277V

Notes:
[1] Products also available in non-US voltages and 50Hz for international markets. Consult your Cooper Lighting Representative for availability and ordering information.
[2] 150W Maximum.
[3] If 13W fixtures are ordered as electronic, lamps will be quad tube.
[4] Open-rated socket and lamp must be used.
[5] Not applicable for HPS lamps.

PHOTOMETRICS

Candlepower Distribution

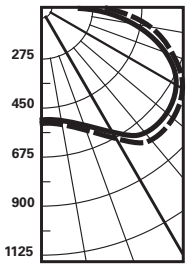

Test No. 6585.1
HUD-100MH
Lamp=MH100/U/MED
No. Lamps=1
Lumens=7600
Spacing Criteria
⊥= 2.1 ‖= 2.1
Efficiency=64.0%

⊥
‖

Candlepower

Deg.	⊥	‖
0	513	513
5	512	510
15	543	546
25	595	584
35	708	687
45	769	800
55	770	770
65	690	692
75	582	588
85	344	363
90	122	138

Zonal Lumen Summary

Zone	Lumens	%Lamp	%Luminaire
0-30	484	6.4	10.0
0-40	935	12.3	19.3
0-60	2389	31.4	49.4
0-90	4440	58.4	91.8
90-180	395	5.2	8.2
0-180	4835	63.6	100.0

Coefficient of Utilization

rc	80%				70%			50%		30%		10%		0%
rw	70	50	30	10	50	30	10	50	10	50	10	50	10	0
RCR														
0	74	74	74	74	72	72	72	68	68	64	64	60	60	58
1	65	61	57	54	59	55	52	55	50	52	47	48	45	43
2	58	51	45	40	49	44	39	46	37	43	36	40	34	32
3	51	43	37	32	42	36	31	39	30	36	28	34	27	25
4	46	37	30	25	36	30	25	34	24	31	23	29	22	20
5	42	32	25	20	31	24	20	29	19	27	18	25	18	16
6	38	28	21	17	27	21	16	25	16	24	15	22	14	13
7	35	25	18	14	24	18	13	22	13	21	12	19	12	10
8	32	22	16	11	21	15	11	20	11	18	10	17	10	09
9	29	19	13	10	19	13	09	18	09	16	09	15	08	07
10	27	18	12	08	17	12	08	16	08	15	07	14	07	06

rc=Ceiling reflectance, rw=W all reflectance, RCR=Room cavity ratio
CU Data Based on 20% Effective Floor Cavity Reflectance.

Submitted by Enterprise Lighting, LTD.

Enterprise Lighting Ltd
Manufacturers' Representative

Job Name:
Menards - Blanket 2010

Catalog Number:
ICF-SS-232-UNV-EB81-U

Notes:

Type:

ELL10-10457

COOPER LIGHTING - METALUX®

DESCRIPTION

The IAF Series is an energy efficient family of light duty industrials that feature premium performance and durability. The series incorporates sturdy embossed reflectors that precisely direct and effectively control light. The IAF Series can be installed using various mounting methods and numerous options and accessories are available. The series is available with both Apertured (IAF) and Closed Top (ICF) reflector combinations.

The IAF Series can be utilized in simple task and area lighting and industrial applications.

		Type
Catalog #		
Project		
Comments		Date
Prepared by		

SPECIFICATION FEATURES

A···Construction
Nominal Channel is code gauge prime cold rolled steel. Numerous KOs for ease of installation. End plate quickly connects to channel connector. Groove for tong hanger lamp holder bracket flips in place.

B···Electrical*
Ballast are CBM/ETL Class "P" and positively secured by mounting bolts. UL/CUL listed. Suitable for damp locations.

C···Finish
Multistage iron phosphate pre-treatment ensures maximum bonding and rust inhibitor. Lighting grade, baked white enamel finish.

D···Reflectors
Die formed prime steel, code gauge. Formed edges for added strength. 12" width. Reflectors secured with quarter-turn fasteners. All reflectors 4' sections. Baked white enamel. Standard with 8% uplight (IAF). Closed top reflector (ICF). Optional industrial fixtures are available incorporating silver technology enhancements. (SilverLining)

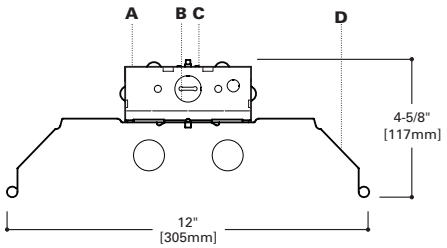

IAF, ICF
228T8, 232
248HO, 296HO
248T8HO
296T8HO
248, 296
296T8

4' OR 8' INDUSTRIAL
2 OR 3 LAMPS
T8, HIGH OUTPUT, SLIMLINE
Light Duty Industrial

LAMP CONFIGURATIONS

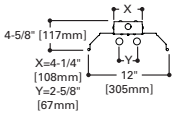

MOUNTING DATA

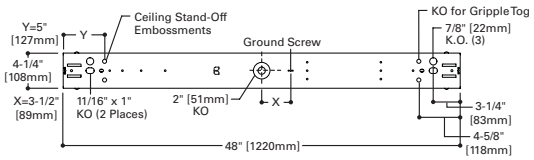

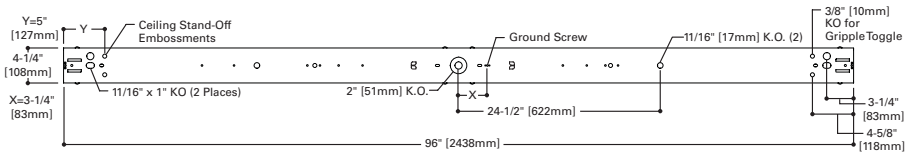

ENERGY DATA

Input Watts:
HB Ballast, Normal Ballast Factor
228T8 (49), 232 (53)
Luminaire Efficacy Rating
LER = FL-79
Catalog Number: IAF-232

EB Ballast & STD Lamps
248T8HO (99), 296HO (208), 296T8HO (160), 248 (74), 296 (136), 296 (136)

ES Ballast & STD
296 (158)

STD Ballast & STD Lamps
248HO (145), 248 (102)
Luminaire Efficacy Rating
LER = FL-54
Catalog Number: IAF-296HO

Yearly Cost of 1000 lumens, 3000 hrs at .08 KWH = $4.44

*Reference the lamp/ballast data in the Technical Section for specific lamp/ballast requirements.

LAMPS CONTAIN MERCURY. DISPOSE ACCORDING TO LOCAL, STATE OR FEDERAL LAWS

LINEAR DISCONNECT
Safe and convenient means of disconnecting power.

ADF090176

Submitted by Enterprise Lighting, LTD.			
Enterprise Lighting Ltd Manufacturers' Representative	**Job Name:** Menards - Blanket 2010	**Catalog Number:** ICF-SS-232-UNV-EB81-U Notes:	**Type:** ELL10-10457

PHOTOMETRICS

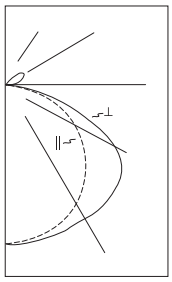

IA-296HO
Standard Ballast
F96T12/CW/HO/WM Lamps
8000 Lumens

Spacing criterion: (II) 1.3 x mounting height, (⊥) 1.5 x mounting height

Efficiency 84.1%

Test Report: IA296HO.IES

LER = FI-54

Yearly Cost of 1000 lumens, 3000 hrs at .08 KWH = $4.44

Coefficients of Utilization

Effective floor cavity reflectance 20%

rc	80%				70%				50%			30%			10%			0%
rw	70	50	30	10	70	50	30	10	50	30	10	50	30	10	50	30	10	0
RCR																		
0	99	99	99	99	96	96	96	96	90	90	90	85	85	85	81	81	81	79
1	90	85	81	78	87	83	79	76	78	75	73	74	72	70	70	68	67	64
2	81	73	67	62	78	71	66	61	67	63	59	64	60	57	60	57	54	52
3	73	64	56	51	70	62	55	50	59	53	48	55	51	47	53	49	45	43
4	66	56	48	42	64	54	47	42	51	45	40	49	44	39	46	42	38	36
5	61	49	42	36	59	48	41	35	46	39	34	43	38	33	41	36	33	31
6	56	44	36	31	54	43	36	30	41	34	30	39	33	29	37	32	28	26
7	52	40	32	27	50	39	32	27	37	31	26	35	30	25	34	29	25	23
8	48	36	29	24	46	35	28	23	34	27	23	32	27	22	31	26	22	20
9	45	33	26	21	43	32	26	21	31	25	20	30	24	20	28	23	20	18
10	42	30	23	19	40	30	23	19	28	23	18	27	22	18	26	21	18	16

Zonal Lumen Summary

Zone	Lumens	%Lamp	%Fixture
0-30	2809	17.6	20.9
0-40	4765	29.8	35.4
0-60	9282	58.0	69.0
0-90	12575	78.6	93.5
90-180	878	5.5	6.5
0-180	13453	84.1	100.0

Candela

Angle	Along II	45°	Across ⊥
0	3478	3478	3478
10	3453	3446	3513
20	3288	3355	3468
30	3025	3194	3438
40	2657	3014	3378
50	2207	2785	3228
60	1666	2443	2687
70	1051	1674	1524
80	413	586	450
90	10	32	23
100	5	176	182
110	6	298	342
120	8	285	458
130	9	170	371
140	13	63	209
150	14	18	70
160	12	12	14
170	11	11	11
180	10	10	10

ORDERING INFORMATION

SAMPLE NUMBER: IAF-296T8HO-120V-U

Tandem
Blank=4' Length
8T=8' Length

Series
IAF=Apertured Reflector
ICF=Closed Top Reflector

SilverLining
SS=Silver-Lining Housing and Ballast Cover[5]

Number of Lamps
2=Lamps (Not Included)

Wattage
28T8=28W T8 (48")[4]
32=32W T8 (48")
48HO=60W T12 (48") HO
48T8HO=44W T8 (48") HO
96HO=95/110W T12 (96") HO
96T8HO=86W T8 (96") HO
48=40W T12 (48") SL
96=60/75W T12 (72") SL
96=59W T8 (96") SL

Voltage[1]
120V=120 Volt
277V=277 Volt
347V=347 Volt
UNV=Universal Voltage 120-277[2]

Options
GL=Single Element Fuse
GM=Double Element Fuse
EL4=Emergency Installed
EL8=Emergency Installed

Ballast Type[1]
EB2_=T12 Electronic Rapid Start.
No. of Ballast 1 or 2

EB8_=T8 Electronic Instant Start. Total Harmonic Distortion < 10%
No. of Ballast 1 or 2

EB8_**/PLUS**=T8 Electronic Instant Start. High Ballast Factor >1.13. Total Harmonic Distortion < 10%
No. of Ballast 1 or 2

ER8_=T8 Electronic Program Rapid Start. Total Harmonic Distortion < 10%
No. of Ballast 1 or 2

ER8_**/PLUS**=T8 Electronic Program Start. High Ballast Factor >1.13. Total Harmonic Distortion < 10%
No. of Ballast 1 or 2

HPT8 Ballast
Ballast
HB8_L=T8 Electronic Instant Start. Low Ballast Factor .77
HB8_=T8 Electronic Instant Start. Ballast Factor .88
HB8_N=T8 Electronic Instant Start. Normal Ballast Factor 1.0
HB8_H=T8 Electronic Instant Start. High Ballast Factor 1.15-1.2
HR8_DIM=T8 Electronic Program Start Step Dimming. Ballast Factor .88
HR8_L=T8 Electronic Program Start. Low Ballast Factor .77
HR8_=T8 Electronic Program Start. Ballast Factor .88
HR8_H=T8 Electronic Program Start. High Ballast Factor 1.15-1.2

Options
RIF1=Radio Interference Suppressor
6-3/18 SJT-C&P-515P=Cord & Plug (120V), (15 AMP)[3]
6-3/18 SJT-C&P-L715P=Cord & Plug (277V), (15 AMP)[3]
PI/CPI=Plug-In Option[4]
TILW=Tandem In-Line Wiring Option (Consult TILW Option Catalog Page)[3]
(See options & accessories)

Packaging
U=Unit Pack
4B=4 Bulk

ACCESSORIES (Order Separately)

A-1-B/Spacer-U=Spacer 1-1/2" to 2-1/2" from ceiling (Use 2 per fixture)
GRP-SSF=Gripper Hanger (Use 2 per fixture)
SCF=Fixed Stem Set (Specify Length)
SCS=Swivel Stem Set (Specify Length)
SCA=Adjustable 48" Stem Set
AYC-Chain/Set-U=Chain Hanger Set (Use 1 set per fixture)
WG/ICF-4FT-U[2]=Wire Guard
CLC-SSF=Long Channel Connector SSF
TOGGLE=Single Toggle NO. 2 (Specify Length)
Y-TOGGLE=Y Toggle NO. 2 (Specify Length)

NOTES: [1]Products also available in non-US voltages and frequencies for international markets. [2]Not available when specifying emergencies, voltage must be specific. Exception EL4. [3]Socket brackets left uninstalled. [4]When utilizing 28W T8 lamps, HPT8 Ballast must be specified. [5]Not available with HO lamps.

Specifications & dimensions subject to change without notice. Consult your Cooper Lighting Representative for availability and ordering information.

SHIPPING INFORMATION

Catalog No.	Wt.
IAF-232	13 lbs.
8TIAF-232	26 lbs.

Submitted by Enterprise Lighting, LTD.

Enterprise Lighting Ltd
Manufacturers' Representative

Job Name:
Menards - Blanket 2010

Catalog Number:
MPSS-PD22-M-350-277V-OR-FH-1-CS-PC9-277V-WHT
Notes: non Venture alternate

Type:
ALT
ELL10-10457

Ⓔ COOPER LIGHTING - LUMARK®

energy solutions

DESCRIPTION

The Prismatic High-bay combines the popular Steeler ballast housing with an acrylic reflector for maximum durability and photometric performance. U.L. listed and labeled for damp location. CSA Certified.

The Prismatic High-bay is perfect for retail stores, wholesale warehouses, grocery chains, malls and auto showrooms.

		Type
Catalog #		
Project		
Comments		Date
Prepared by		

SPECIFICATION FEATURES

A ... Mounting
Easy slide-on die-cast aluminum mounting box with tapped opening for 3/4" conduit.

B ... Housing
Heavy-duty, formed steel housing with an open air ballast for cooler operation is finished in a white polyester powder coat.

C ... Ballast
High power factor ballast with class H insulation. Minimum starting temperature is -40°C (-40°F) for HPS and -30°C (-20°F) for MH. CSA certified.

D ... Universal Brackets
Universal ladder brackets allow for the flexibility to change out with other reflectors available in aluminum or glass.

E ... Socket
Mogul-base porcelain socket.

F ... Reflector
Easily mounted prismatic acrylic reflector has multiple field-adjustable distribution patterns for precision control.

SS
22" PRISMATIC HIGH-BAY

175 - 450W
High Pressure Sodium
Pulse Start Metal Halide
Metal Halide

PRISMATIC HIGH-BAY INDUSTRIAL LUMINAIRE

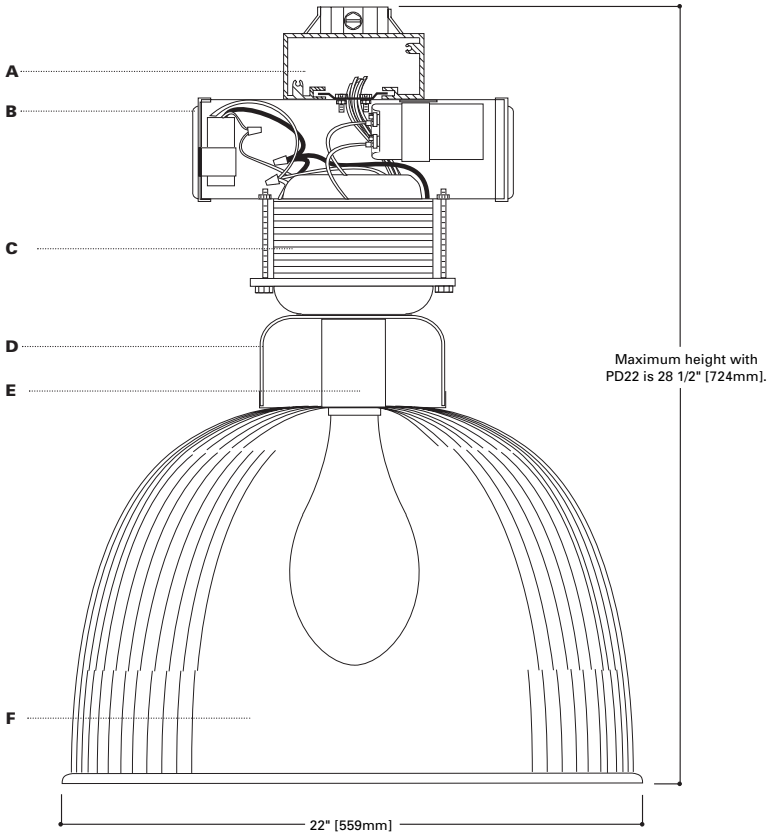

(Drop bottom adds 3 1/2" to overall height.)

TECHNICAL DATA

EISA Compliant Ⓔ
40°C Maximum Ambient Environment.
90°C Minimum Supply Wiring.

ENERGY DATA

CWI Ballast Input Watts
250W HPS HPF (300 Watts)
250W MH HPF (300 Watts)
400W HPS HPF (465 Watts)
400W MH HPF (475 Watts)

CWA Ballast Input Watts
175W MP HPF (198 Watts) Ⓔ
200W MP HPF (227 Watts) Ⓔ
250W MP HPF (283 Watts) Ⓔ
320W MP HPF (365 Watts) Ⓔ
350W MP HPF (400 Watts) Ⓔ
400W MP HPF (452 Watts) Ⓔ
400W HPS HPF (465 Watts)
450W MP HPF (508 Watts) Ⓔ

SHIPPING DATA

Approximate Net Weight:
42 lbs. (19 kgs.)

COOPER Lighting
www.cooperlighting.com

Specifications and Dimensions subject to change without notice.
Consult your representative for additional options and finishes.

ADH082400
01/21/2009 4:10:20 PM

Submitted by Enterprise Lighting, LTD.

Enterprise Lighting Ltd
Manufacturers' Representative

Job Name:
Menards - Blanket 2010

Catalog Number:
MPSS-PD22-M-350-277V-OR-FH-1-CS-PC9-277V-WHT
Notes: non Venture alternate

Type:
ALT
ELL10-10457

SS 22" PRISMATIC HIGH-BAY

ORDERING INFORMATION

Sample Number: MPSS-PD22-M-250-MT-Q

Lamp Type
- **MP**= Pulse Start Metal[1] Halide
- **MH**= Metal Halide[1]
- **HP**= High Pressure[2] Sodium
- **ML**= Pulse Start MH [1, 3, 4] (Linear Reactor)

Series
- **SS**= Steeler

Reflector Type
- **PD**= Prismatic Acrylic

Reflector Diameter
- **22**= 22" Diameter

Distribution [5]
- **C**= Concentrated
- **M**= Medium
- **W**= Wide

Lamp Wattage

MP
- **175**= 175W
- **200**= 200W
- **250**= 250W
- **320**= 320W
- **350**= 350W
- **400**= 400W
- **450**= 450W

MH
- **175**= 175W
- **250**= 250W
- **400**= 400W

HP
- **250**= 250W
- **400**= 400W

Voltage [6]
- **120V**= 120V
- **208V**= 208V
- **240V**= 240V
- **277V**= 277V
- **347V**= 347V
- **480V**= 480V
- **MT**= Multi-Tap, [7] wired 277V
- **TT**= Triple-Tap, [8] wired 347V
- **5T**= 5-Tap[9]

Options [10]
- **VI**= Visual Indicator system, externally mounted LED Signal
- **P**= Pre-set Socket Position from the factory
- **OR**= Open Rated Socket For Metal Halide Lamps
- **SS**= Space Saver Feature
- **Q**= Quartz Restrike (Hot Strike Only)
- **EM**= Quartz Restrike with "Delay Relay" (Quartz lamp strikes at both hot and cold starts)
- **EM/SC**= Emergency Separate Circuit[11]
- **LL**= Lamp Included[12]
- **QD**= Quick Disconnect Die-Cast Pendant Mount Box(Specify Single Voltage, Not Compatible with PC3, PHC, C3, MWS, RM or HC)
- **SCF**= 3' Aircraft Safety Cable secures Housing to Ceiling (Alternative lengths available. Example: SCF6 = 6' Cable)
- **SCR**= Aircraft Safety Cable-Housing to Reflector
- **L/TCB**= Less Top Connector Box (Housing shipped less top connector box. (Specify when using TWMBS accessory)
- **RM**= Remote Mount[13]
- **QLL**= Quartz Lamp Included (Lamp is Cooper designated product based on luminaire requirements. Lamp is shipped separate from luminaire unless otherewise noted)
- **W/MWS**= MWS Industrial components attached to the fixture at the factory. (Standard cord length is 3 ft. 6 ft. and 11 ft. also available. Please refer to MWS Modular Wiring System section for additional information.
- **F1**= Single Fuse (120, 277 or 347V only)
- **F2**= Double Fuse (208, 240 or 480V only)
- **FH-1**= Die-cast Aluminum Fixture Hook (with 3/4" threads for easy installation)
- **FL-1**= Malleable Iron Plated Fixture Loop (with 3/4" threads for easy installation)
- **SHK**= Die-cast Aluminum Fixture Hook (with safety screw and 3/4" threads for easy installation)
- **C3**= 3' Cord with no plug (Must use with FH-1 or FL-1, or SHK)
- **PC3**= 3' Cord with NEMA Plug (120V-L5-15P, 208V-L6-15P, 347V-L37-20P, AND 480V-L8-20P) Other cord lengths are available by specifying length (PC6 for 6' Cord) Requires FH-1 or FL-1, or SHK. Example: PC3-120V Use with TPPH-NEMA. Specify Voltage.
- **PHC**= Power Cord and Plug (18" Power Cord and Non-NEMA plug configuration. Must be used with FL-1 and TPPH (Thru-Way Pendant Power Hook). Must specify single voltage.
- **PHC-NEMA**= Power Cord and NEMA Plug (18" Power Cord and 20 AMP NEMA plug configuration). Must be used with FL-1 and TPPH-NEMA (Thru-Way Pendant Power Hook).
- **HL**= LumaWatt Fixture Control Module [14] (Allows low voltage control wire to be daisy-chained between fixtures outside AC conduit run similar to low voltage intercom's, fire alarms and phone systems)
- **HSW**= Integral LumaWatt Sensor and Control[14] w/ Wide Distribution
- **HC**= LumaWatt Fixture Control Module [14, 15] (Low voltage leads pulled out of top connection box for areas requiring all wiring to be installed in conduit)

Accessories [16]
- **C3**= 3' Cord-No Plug - Requires FH-1, FL-1, or SHK
- **PC3**= 3' Cord with NEMA Plug - (120V-L5, 208V-L6-15P, 347V-L37-20P and 480V-L8-20P) Other cord lengths are available by specifying length (PC6 for 6' cord). Requires FH-1 or FL-1, or SHK. Us with TPPH-NEMA. Specify Voltage.
- **PHC**= Power Hook Cord and Non-NEMA plug configuration. Must be used with FL-1 an TPPH (Thru-Way Pendant Power Hook)
- **PHC-NEMA**= Power Cord and NEMA plug - 18' Power Cord and 20 Amp NEMA plug configuration. Must be used with FL-1 and TPPH-NEMA (Thru-Way Pendant Power Hook)
- **SGB22**= Safety Glass Bottom for 22" Refractor (Not Compatible with WG22 - 400W max.)
- **WG22/GLC**= Gym Wireguard w/ Safety Glass
- **FWG22/WG22**= Full Wire Guard for 22" Reflec
- **FWG22/WDB**= Wire Guard with DB22 Drop len for PD 22" Refractor - DB22 not included
- **WG22**= Wire Guard for PD 22" Refractor(Not compatible with SGB)
- **WGD22**= Wire Guard for PD or PC 22" Refractc (Not Compatible with SGB22)
- **WG22/SGB**= Wireguard with Glass Lens for 22' Reflector (400W Max.)
- **FWG22/WDB**= Full Wire Guard ("SGB" not included)
- **FWG22/WG22/SGB22**= Full Wire Guard for 2 Reflector and SGB22 lens (400W Max.)
- **FWG25/WG25**= Full Wire Guard for PD25 (SG not included)
- **DB22**= Drop Acrylic Refractor for 22" (400W ma
- **CB22**= Conical Bottom for 22" Refractor(Maxim 400W).
- **MBT**= Twin Mount Bracket (Fixtures must be sa voltage and without hooks, loops or plugs
- **TPPH**= Thru-Way Pendant Power Hook. Requir FL-1 and PHC. Specify Voltage.
- **TPPH-F**= Thru-Way Pendant Power Hook Single Fuse, 120, 277 or 347 Volt. Requires FL-1 and PHC. Specify Voltage.
- **TPPH-F2**= Thru-Way Pendant Power Hook - Double Fused, 208, 240, or 480 Volt Requires FL-1 and PHC. Specify Voltage.
- **TPPH-F-QD**= Thru-Way Pendant Power Hook Single Fuse, Quick Disconnect. Requires FL-1 and PHC. Specify Voltage (120, 277, or 347V)
- **TPPH-F2-QD**= Thru-Way Pendant Power Hook Double Fuse, Quick Disconnect Requires FL-1 and PHC. Specif Voltage (208, 240, or 480V)
- **TPPH-NEMA**= Thru-Way Pendant Power Hook Requires FL-1 and PHC-XXXV-NEMA. Specify
- **FH-1**= Fixture Hook
- **FL-1**= Fixture Loop
- **SHK**= Hook with Safety Screw
- **TWMBS**= Thru-Way Mounting Box[17]

Notes:
1. Approved lamp containment barrier required when enclosed rated MP/ML/MH lamps are used. 2005 NEC code requires that open luminaires must utilize a safety glass bottom (SGB) accessory or an Open rated socket (OR) and lamp.
2. Not available in 175, 200, 320 and 350W.
3. 175, 200, 250, 320, 350 and 400W only.
4. 277V only, not available with HSW, Q, EM, HL or HC options.
5. Factory set for concentrated, medium or wide distributions only if P (factory pre-set) is in the nomenclature of the fixture. Otherwise fixture is shipped in medium setting.
6. Products also available in non-US voltages and 50HZ for international markets. Consult your Cooper Representative for availabiltiy and ordering information. 88% Efficient EISA Compliant MP Fixtures not available in 347V and TT Voltages.
7. Multi-Tap ballast 120/208/240/277V wired 277V.
8. Triple-Tap ballast 120/277/347V wired 347V.
9. 5-Tap ballast 120/208/240/277/480V wired 277V. 400W Metal Halide only. 88% efficient EISA Compliant MP fixtures not available in 5-Tap Voltages.
10. Must be listed in the order shown and separated by a dash.
11. Not available with HL or HC options.
12. Lamp is shipped separately.
13. Not available with QD, W or WL options.
14. 30 second time delay when switching from bright to dim. Consult individual lamp manufacturers recommendations for compatible lamps. For use with CWA ballast only.
15. Not available with QD, PC3, C3, PHC or MWS. Not available with single circuit MWS special order.
16. Order separately.
17. Specify L/TCB when using thru-way mounting box (TWMBS) accessory.

PC9-277V-WHT

VOLTAGE CHART	
MT=Multi-Tap	120/208/240/277 (wired 277V)
TT=Triple-Tap	120/277/347 (wired 347V)
5T=5-Tap [9]	120/208/240/277/480 (wired 277V)

LAMP TYPE	WATTAGE
Pulse Start Metal Halide (MP)	175, 200, 250, 320, 350, 400, 450W
Metal Halide (MH)	175, 250, 400W
High Pressure Sodium (HP)	250, 400W

Submitted by Enterprise Lighting, LTD.

Enterprise Lighting Ltd
Manufacturers' Representative

Job Name:
Menards - Blanket 2010

Catalog Number:
MPSS-PD22-M-350-277V-OR-FH-1-CS-PC9-277V-WHT
Notes: non Venture alternate

Type:
ALT
ELL10-10457

PHOTOMETRICS

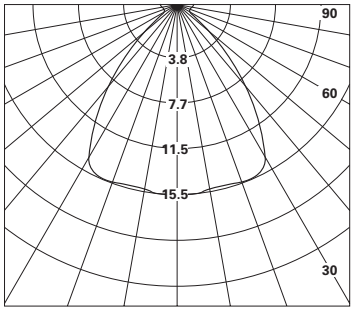

CP/1000

MPSS-PD22-C-400-120
400-Watt MP
42,000-Lumen Coated Lamp*
*Coated lamp recommended.

Coefficients Of Utilization

Effective floor cavity reflectance 20%

rc	80%				70%				50%			30%			10%			0%
rw	70	50	30	10	70	50	30	10	50	30	10	50	30	10	50	30	10	0
RCR																		
1	93	89	85	82	88	85	82	79	78	75	73	71	69	68	65	64	62	59
2	86	79	74	70	82	76	71	67	70	66	63	64	61	59	59	57	55	52
3	79	71	65	60	76	69	63	59	63	59	55	59	55	52	54	51	49	46
4	74	65	58	53	70	62	56	51	58	53	49	54	49	46	50	46	44	41
5	69	59	52	47	65	57	50	46	53	47	43	49	45	41	46	42	39	37
6	64	54	47	42	61	52	45	41	48	43	39	45	41	37	42	38	36	34
7	60	49	42	38	57	48	41	37	45	39	35	42	37	34	39	35	32	30
8	56	45	39	34	53	44	38	33	41	36	32	39	34	31	36	32	30	28
9	52	42	35	31	50	40	34	30	38	33	29	36	31	28	34	30	27	25
10	49	39	32	28	47	38	32	28	35	30	27	33	29	26	32	28	25	23

Spacing Criterion 1.3

Zone	%Lamp	Zone	%Lamp
0-30	29.1	0-90	69.6
0-40	46.0	90-180	19.1
0-60	60.5	Total	88.7

Candlepower

Degree	CP
0	15546
5	15546
15	15300
25	15534
35	12095
45	5975
55	1645
65	1192
75	1261
85	1380
90	1419
95	1467
105	1445
115	1312
125	1186
135	1296
145	1503
155	1428
165	1103
175	236
180	159

Submitted by Enterprise Lighting, LTD.

Enterprise Lighting Ltd
Manufacturers' Representative

Job Name:
Menards - Blanket 2010

Catalog Number:
MPSS-PD22-M-350-277V-OR-FH-1-CS-PC6-277V-WHT
Notes: non Venture alternate

Type:
ALT
ELL10-10457

Ⓔ COOPER LIGHTING - LUMARK®

energy solutions

DESCRIPTION

The Prismatic High-bay combines the popular Steeler ballast housing with an acrylic reflector for maximum durability and photometric performance. U.L. listed and labeled for damp location. CSA Certified.

The Prismatic High-bay is perfect for retail stores, wholesale warehouses, grocery chains, malls and auto showrooms.

		Type
Catalog #		
Project		
Comments		Date
Prepared by		

SPECIFICATION FEATURES

A ... Mounting
Easy slide-on die-cast aluminum mounting box with tapped opening for 3/4" conduit.

B ... Housing
Heavy-duty, formed steel housing with an open air ballast for cooler operation is finished in a white polyester powder coat.

C ... Ballast
High power factor ballast with class H insulation. Minimum starting temperature is -40°C (-40°F) for HPS and -30°C (-20°F) for MH. CSA certified.

D ... Universal Brackets
Universal ladder brackets allow for the flexibility to change out with other reflectors available in aluminum or glass.

E ... Socket
Mogul-base porcelain socket.

F ... Reflector
Easily mounted prismatic acrylic reflector has multiple field-adjustable distribution patterns for precision control.

SS
22" PRISMATIC HIGH-BAY

175 - 450W
High Pressure Sodium
Pulse Start Metal Halide
Metal Halide

PRISMATIC HIGH-BAY INDUSTRIAL LUMINAIRE

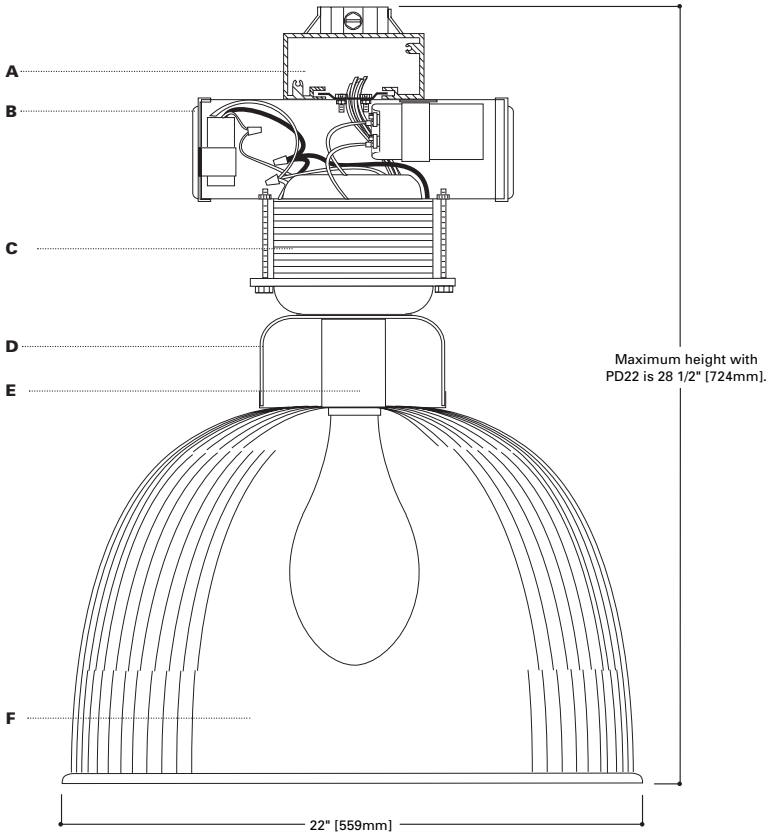

(Drop bottom adds 3 1/2" to overall height.)

TECHNICAL DATA

EISA Compliant Ⓔ
40°C Maximum Ambient Environment.
90°C Minimum Supply Wiring.

ENERGY DATA

CWI Ballast Input Watts
250W HPS HPF (300 Watts)
250W MH HPF (300 Watts)
400W HPS HPF (465 Watts)
400W MH HPF (475 Watts)

CWA Ballast Input Watts
175W MP HPF (198 Watts) Ⓔ
200W MP HPF (227 Watts) Ⓔ
250W MP HPF (283 Watts) Ⓔ
320W MP HPF (365 Watts) Ⓔ
350W MP HPF (400 Watts) Ⓔ
400W MP HPF (452 Watts) Ⓔ
400W HPS HPF (465 Watts)
450W MP HPF (508 Watts) Ⓔ

SHIPPING DATA

Approximate Net Weight:
42 lbs. (19 kgs.)

COOPER Lighting
www.cooperlighting.com

Specifications and Dimensions subject to change without notice.
Consult your representative for additional options and finishes.

ADH082400
01/21/2009 4:10:20 PM

Submitted by Enterprise Lighting, LTD.

Enterprise Lighting Ltd
Manufacturers' Representative

Job Name:
Menards - Blanket 2010

Catalog Number:
MPSS-PD22-M-350-277V-OR-FH-1-CS-PC6-277V-WHT
Notes: non Venture alternate

Type:
ALT
ELL10-10457

SS 22" PRISMATIC HIGH-BAY

ORDERING INFORMATION

Sample Number: MPSS-PD22-M-250-MT-Q

Lamp Type
- **MP**= Pulse Start Metal[1] Halide
- **MH**= Metal Halide[1]
- **HP**= High Pressure[2] Sodium
- **ML**= Pulse Start MH [1, 3, 4] (Linear Reactor)

Series
- **SS**= Steeler

Reflector Type
- **PD**= Prismatic Acrylic

Reflector Diameter
- **22**= 22" Diameter

Distribution [5]
- **C**= Concentrated
- **M**= Medium
- **W**= Wide

Lamp Wattage

MP
- **175**= 175W
- **200**= 200W
- **250**= 250W
- **320**= 320W
- **350**= 350W
- **400**= 400W
- **450**= 450W

MH
- **175**= 175W
- **250**= 250W
- **400**= 400W

HP
- **250**= 250W
- **400**= 400W

Voltage [6]
- **120V**= 120V
- **208V**= 208V
- **240V**= 240V
- **277V**= 277V
- **347V**= 347V
- **480V**= 480V
- **MT**= Multi-Tap, [7] wired 277V
- **TT**= Triple-Tap, [8] wired 347V
- **5T**= 5-Tap[9]

Options [10]
- **VI**= Visual Indicator system, externally mounted LED Signal
- **P**= Pre-set Socket Position from the factory
- **OR**= Open Rated Socket For Metal Halide Lamps
- **SS**= Space Saver Feature
- **Q**= Quartz Restrike (Hot Strike Only)
- **EM**= Quartz Restrike with "Delay Relay" (Quartz lamp strikes at both hot and cold starts)
- **EM/SC**= Emergency Separate Circuit[11]
- **LL**= Lamp Included[12]
- **QD**= Quick Disconnect Die-Cast Pendant Mount Box(Specify Single Voltage, Not Compatible with PC3, PHC, C3, MWS, RM or HC)
- **SCF**= 3' Aircraft Safety Cable secures Housing to Ceiling (Alternative lengths available. Example: SCF6 = 6' Cable)
- **SCR**= Aircraft Safety Cable-Housing to Reflector
- **L/TCB**= Less Top Connector Box (Housing shipped less top connector box. (Specify when using TWMBS accessory)
- **RM**= Remote Mount[13]
- **QLL**= Quartz Lamp Included (Lamp is Cooper designated product based on luminaire requirements. Lamp is shipped separate from luminaire unless otherewise noted)
- **W/MWS**= MWS Industrial components attached to the fixture at the factory. (Standard cord length is 3 ft. 6 ft. and 11 ft. also available. Please refer to MWS Modular Wiring System section for additional information.
- **F1**= Single Fuse (120, 277 or 347V only)
- **F2**= Double Fuse (208, 240 or 480V only)
- **FH-1**= Die-cast Aluminum Fixture Hook (with 3/4" threads for easy installation)
- **FL-1**= Malleable Iron Plated Fixture Loop (with 3/4" threads for easy installation)
- **SHK**= Die-cast Aluminum Fixture Hook (with safety screw and 3/4" threads for easy installation)
- **C3**= 3' Cord with no plug (Must use with FH-1 or FL-1, or SHK)
- **PC3**= 3' Cord with NEMA Plug (120V-L5-15P, 208V-L6-15P, 347V-L37-20P, AND 480V-L8-20P) Other cord lengths are available by specifying length (PC6 for 6' Cord) Requires FH-1 or FL-1, or SHK. Example: PC3-120V Use with TPPH-NEMA. Specify Voltage.
- **PHC**= Power Cord and Plug (18" Power Cord and Non-NEMA plug configuration. Must be used with FL-1 and TPPH (Thru-Way Pendant Power Hook). Must specify single voltage.
- **PHC-NEMA**= Power Cord and NEMA Plug (18" Power Cord and 20 AMP NEMA plug configuration). Must be used with FL-1 and TPPH-NEMA (Thru-Way Pendant Power Hook).
- **HL**= LumaWatt Fixture Control Module [14] (Allows low voltage control wire to be daisy-chained between fixtures outside AC conduit run similar to low voltage intercom's, fire alarms and phone systems)
- **HSW**= Integral LumaWatt Sensor and Control[14] w/ Wide Distribution
- **HC**= LumaWatt Fixture Control Module [14, 15] (Low voltage leads pulled out of top connection box for areas requiring all wiring to be installed in conduit)

Accessories [16]
- **C3**= 3' Cord-No Plug - Requires FH-1, FL-1, or SHK
- **PC3**= 3' Cord with NEMA Plug - (120V-L5, 208V-L6-15P, 347V-L37-20P and 480V-L8-20P) Other cord lengths are available by specifying length (PC6 for 6' cord). Requires FH-1 or FL-1, or SHK. Us with TPPH-NEMA. Specify Voltage.
- **PHC**= Power Hook Cord and Non-NEMA plug configuration. Must be used with FL-1 an TPPH (Thru-Way Pendant Power Hook)
- **PHC-NEMA**= Power Cord and NEMA plug - 18' Power Cord and 20 Amp NEMA plug configuration. Must be used with FL-1 and TPPH-NEMA (Thru-Way Pendant Power Hook)
- **SGB22**= Safety Glass Bottom for 22" Refractor (Not Compatible with WG22 - 400W max.)
- **WG22/GLC**= Gym Wireguard w/ Safety Glass
- **FWG22/WG22**= Full Wire Guard for 22" Reflec
- **FWG22/WDB**= Wire Guard with DB22 Drop len for PD 22" Refractor - DB22 not included
- **WG22**= Wire Guard for PD 22" Refractor(Not compatible with SGB)
- **WGD22**= Wire Guard for PD or PC 22" Refractc (Not Compatible with SGB22)
- **WG22/SGB**= Wireguard with Glass Lens for 22' Reflector (400W Max.)
- **FWG22/WDB**= Full Wire Guard ("SGB" not included)
- **FWG22/WG22/SGB22**= Full Wire Guard for 2 Reflector and SGB22 lens (400W Max.)
- **FWG25/WG25**= Full Wire Guard for PD25 (SG not included)
- **DB22**= Drop Acrylic Refractor for 22" (400W ma
- **CB22**= Conical Bottom for 22" Refractor(Maxim 400W).
- **MBT**= Twin Mount Bracket (Fixtures must be sa voltage and without hooks, loops or plugs
- **TPPH**= Thru-Way Pendant Power Hook. Requir FL-1 and PHC. Specify Voltage.
- **TPPH-F**= Thru-Way Pendant Power Hook Single Fuse, 120, 277 or 347 Volt. Requires FL-1 and PHC. Specify Voltage.
- **TPPH-F2**= Thru-Way Pendant Power Hook - Double Fused, 208, 240, or 480 Volt Requires FL-1 and PHC. Specify Voltage.
- **TPPH-F-QD**= Thru-Way Pendant Power Hook Single Fuse, Quick Disconnect. Requires FL-1 and PHC. Specify Voltage (120, 277, or 347V)
- **TPPH-F2-QD**= Thru-Way Pendant Power Hook Double Fuse, Quick Disconnect Requires FL-1 and PHC. Specif Voltage (208, 240, or 480V)
- **TPPH-NEMA**= Thru-Way Pendant Power Hook Requires FL-1 and PHC-XXXV-NEMA. Specify
- **FH-1**= Fixture Hook
- **FL-1**= Fixture Loop
- **SHK**= Hook with Safety Screw
- **TWMBS**= Thru-Way Mounting Box[17]

Notes:
1. Approved lamp containment barrier required when enclosed rated MP/ML/MH lamps are used. 2005 NEC code requires that open luminaires must utilize a safety glass bottom (SGB) accessory or an Open rated socket (OR) and lamp.
2. Not available in 175, 200, 320 and 350W.
3. 175, 200, 250, 320, 350 and 400W only.
4. 277V only, not available with HSW, Q, EM, HL or HC options.
5. Factory set for concentrated, medium or wide distributions only if P (factory pre-set) is in the nomenclature of the fixture. Otherwise fixture is shipped in medium setting.
6. Products also available in non-US voltages and 50HZ for international markets. Consult your Cooper Representative for availabiltiy and ordering information. 88% Efficient EISA Compliant MP Fixtures not available in 347V and TT Voltages.
7. Multi-Tap ballast 120/208/240/277V wired 277V.
8. Triple-Tap ballast 120/277/347V wired 347V.
9. 5-Tap ballast 120/208/240/277/480V wired 277V. 400W Metal Halide only. 88% efficient EISA Compliant MP fixtures not available in 5-Tap Voltages.
10. Must be listed in the order shown and separated by a dash.
11. Not available with HL or HC options.
12. Lamp is shipped separately.
13. Not available with QD, W or WL options.
14. 30 second time delay when switching from bright to dim. Consult individual lamp manufacturers recommendations for compatible lamps. For use with CWA ballast only.
15. Not available with QD, PC3, C3, PHC or MWS. Not available with single circuit MWS special order.
16. Order separately.
17. Specify L/TCB when using thru-way mounting box (TWMBS) accessory.

VOLTAGE CHART	
MT=Multi-Tap	120/208/240/277 (wired 277V)
TT=Triple-Tap	120/277/347 (wired 347V)
5T=5-Tap [9]	120/208/240/277/480 (wired 277V)

LAMP TYPE	WATTAGE
Pulse Start Metal Halide (MP)	175, 200, 250, 320, 350, 400, 450W
Metal Halide (MH)	175, 250, 400W
High Pressure Sodium (HP)	250, 400W

Submitted by Enterprise Lighting, LTD.

Enterprise Lighting Ltd
Manufacturers' Representative

Job Name:
Menards - Blanket 2010

Catalog Number:
MPSS-PD22-M-350-277V-OR-FH-1-CS-PC6-277V-WHT
Notes: non Venture alternate

Type:
ALT

ELL10-10457

PHOTOMETRICS

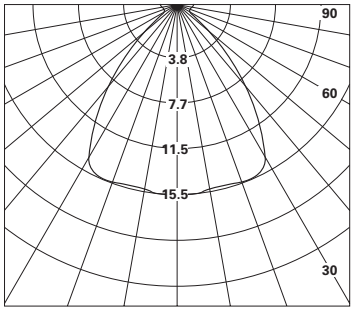

CP/1000

MPSS-PD22-C-400-120
400-Watt MP
42,000-Lumen Coated Lamp*
*Coated lamp recommended.

Coefficients Of Utilization

Effective floor cavity reflectance 20%

rc	80%				70%				50%			30%			10%			0%
rw	70	50	30	10	70	50	30	10	50	30	10	50	30	10	50	30	10	0
RCR																		
1	93	89	85	82	88	85	82	79	78	75	73	71	69	68	65	64	62	59
2	86	79	74	70	82	76	71	67	70	66	63	64	61	59	59	57	55	52
3	79	71	65	60	76	69	63	59	63	59	55	59	55	52	54	51	49	46
4	74	65	58	53	70	62	56	51	58	53	49	54	49	46	50	46	44	41
5	69	59	52	47	65	57	50	46	53	47	43	49	45	41	46	42	39	37
6	64	54	47	42	61	52	45	41	48	43	39	45	41	37	42	38	36	34
7	60	49	42	38	57	48	41	37	45	39	35	42	37	34	39	35	32	30
8	56	45	39	34	53	44	38	33	41	36	32	39	34	31	36	32	30	28
9	52	42	35	31	50	40	34	30	38	33	29	36	31	28	34	30	27	25
10	49	39	32	28	47	38	32	28	35	30	27	33	29	26	32	28	25	23

Spacing Criterion 1.3

Zone	%Lamp	Zone	%Lamp
0-30	29.1	0-90	69.6
0-40	46.0	90-180	19.1
0-60	60.5	Total	88.7

Candlepower

Degree	CP
0	15546
5	15546
15	15300
25	15534
35	12095
45	5975
55	1645
65	1192
75	1261
85	1380
90	1419
95	1467
105	1445
115	1312
125	1186
135	1296
145	1503
155	1428
165	1103
175	236
180	159

Submitted by Enterprise Lighting, LTD.

Enterprise Lighting Ltd
Manufacturers' Representative

Job Name:
Menards - Blanket 2010

Catalog Number:
WN-232A-UNV-EB81-U

Notes:

Type:

ELL10-10457

COOPER LIGHTING - METALUX®

DESCRIPTION

The WN Series is a specification wraparound luminaire featuring energy efficient performance. The luminaire's clean, low profile design is both appealing and functional. The WN Series utilizes a clear, low brightness, extruded acrylic refractor for high performance and aesthetics.

The efficient and stylish WN Series is the perfect wraparound for schools, offices and other commercial and retail spaces.

		Type
Catalog #		
Project		
Comments		Date
Prepared by		

SPECIFICATION FEATURES

A···Construction

Housing consists of die formed cold rolled steel. Ends formed with the housing for strength and provisions for continuous row aligners. Steel end plates with 7/8" KO and light-seal embossment. Ballast cover easily removed without tools.

B···Electrical*

Ballasts are CBM/ETL Class "P" and are positively secured by mounting bolt. Rotor lock lampholders. UL/CUL listed. Suitable for damp locations.

C···Finish

Multistage, prepaint ensures maximum bonding and rust prevention.

D···Lens

100% clear acrylic prismatic lens. Sides have inside linear prisms and bottom has pyramidal prisms for low brightness control.

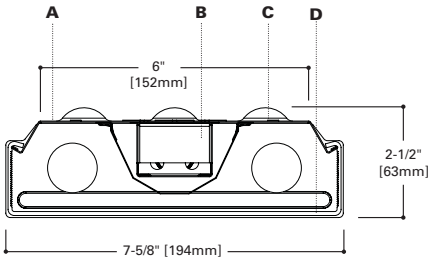

WN
217
228T8
232

2', 4' OR 8' SURFACE T8 LAMPS

Commercial Wrap

LAMP CONFIGURATIONS

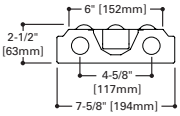

LENS REMOVAL

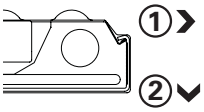

MOUNTING DATA

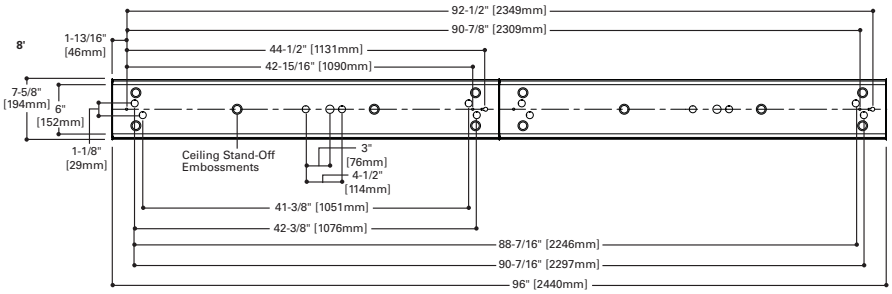

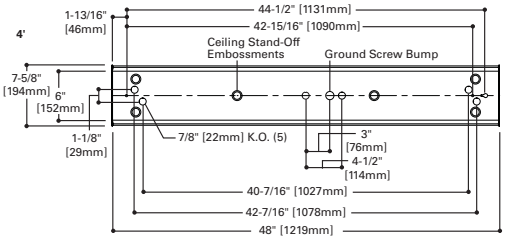

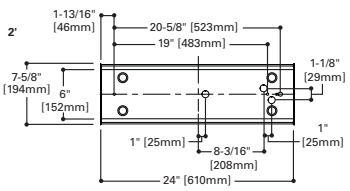

ENERGY DATA

Input Watts:
EB Ballast & STD Lamps
217 (36)
228T8 (48)
232 (55)

Luminaire Efficacy Rating
LER = FW-80
Catalog Number: WN-232A

Yearly Cost of 1000 lumens, 3000 hrs at .08 KWH = $3.00

LER = FW-93
Catalog Number: WN-228T8-HB1

Yearly Cost of 1000 lumens, 3000 hrs at .08 KWH = $2.59

*Reference the lamp/ballast data in the Technical Section for specific lamp/ballast requirements.

LAMPS CONTAIN MERCURY. DISPOSE ACCORDING TO LOCAL, STATE OR FEDERAL LAWS

LINEAR DISCONNECT
Safe and convenient means of disconnecting power.

ADF081637

COOPER LIGHTING

Submitted by Enterprise Lighting, LTD.

Enterprise Lighting Ltd
Manufacturers' Representative

Job Name:
Menards - Blanket 2010

Catalog Number:
WN-232A-UNV-EB81-U

Notes:

Type:

ELL10-10457

PHOTOMETRICS

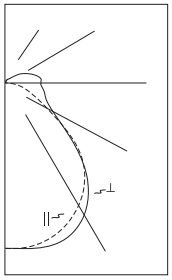

WN-232-EB81-U
Energy Saving Ballast

F32T8/35K lamps
3100 lumens

Spacing criterion:
(II) 1.3 x mounting height, (⊥) 1.4 x mounting height

Efficiency = 82.0%

Test Report:
134P132

LER = FW-80

Yearly Cost of 1000 lumens, 3000 hrs at .08 KWH = $3.00

Candlepower

Angle	Along II	45°	Across ⊥
0	1583	1583	1583
5	1588	1594	1591
10	1580	1597	1607
15	1554	1591	1618
20	1512	1573	1605
25	1454	1534	1563
30	1380	1473	1488
35	1291	1384	1375
40	1181	1258	1225
45	1043	1077	1030
50	848	851	809
55	602	655	626
60	429	518	512
65	317	413	444
70	240	333	409
75	180	270	390
80	123	223	369
85	62	185	347
90	3	155	332

Coefficients of Utilization

Effective floor cavity reflectance 20%

rc	80%				70%				50%			30%			10%			0%
rw	70	50	30	10	70	50	30	10	50	30	10	50	30	10	50	30	10	0
RCR																		
0	95	95	95	95	92	92	92	92	85	85	85	80	80	80	74	74	74	72
1	86	82	79	76	83	80	76	73	74	72	69	69	67	65	65	63	61	59
2	79	72	67	62	76	70	65	61	65	61	58	61	58	55	57	54	52	50
3	72	64	57	52	69	62	56	51	58	53	49	54	50	47	51	47	45	42
4	66	57	50	45	64	55	49	44	52	46	42	49	44	40	46	42	39	37
5	61	51	44	39	59	49	43	38	47	41	37	44	39	35	41	37	34	32
6	57	46	39	34	54	45	38	33	42	36	32	40	35	31	38	33	30	28
7	52	42	35	30	50	41	34	29	38	33	29	36	31	28	34	30	27	25
8	49	38	31	27	47	37	31	26	35	30	26	33	28	25	32	27	24	22
9	46	35	28	24	44	34	28	24	32	27	23	31	26	22	29	25	22	20
10	43	32	26	22	41	31	26	22	30	25	21	29	24	20	27	23	20	18

Zonal Lumen Summary

Zone	Lumens	%Lamp	%Fixture
0-30	1304	21.0	25.6
0-40	2152	34.7	42.3
0-60	3544	57.2	69.7
0-90	4441	71.6	87.3
90-180	645	10.4	12.7
0-180	5086	82.0	100.0

Typical VCP Percentages

	Height Along		Height Across	
Room Size (Ft.)	8.5'	10.0'	8.5'	10.0'
20 x 20	52	58	44	53
30 x 30	43	48	31	39
30 x 60	36	40	15	21
60 x 30	40	46	35	42
60 x 60	32	37	17	22

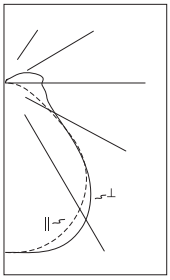

WN-228T8-HB81-U
Energy Saving Ballast

F28T8 28W lamps
2800 lumens

Spacing criterion:
(II) 1.3 x mounting height, (⊥) 1.4 x mounting height

Efficiency = 90.2%

Test Report:
134P133

LER = FW-93

Yearly Cost of 1000 lumens, 3000 hrs at .08 KWH = $2.59

Candlepower

Angle	Along II	45°	Across ⊥
0	1562	1562	1562
5	1566	1572	1569
10	1558	1576	1586
15	1532	1570	1597
20	1490	1552	1586
25	1432	1514	1545
30	1358	1453	1472
35	1270	1365	1361
40	1162	1242	1214
45	1025	1063	1022
50	833	841	803
55	590	648	623
60	422	512	510
65	312	408	442
70	236	328	407
75	178	267	389
80	121	221	367
85	61	184	345
90	3	152	332

Coefficients of Utilization

Effective floor cavity reflectance 20%

rc	80%				70%				50%			30%			10%			0%
rw	70	50	30	10	70	50	30	10	50	30	10	50	30	10	50	30	10	0
RCR																		
0	105	105	105	105	101	101	101	101	94	94	94	87	87	87	81	81	81	78
1	95	91	87	83	91	87	84	81	81	78	76	76	74	71	71	69	67	65
2	87	79	73	68	83	77	71	66	72	67	63	67	63	60	62	60	57	54
3	79	70	63	57	76	68	61	56	63	58	53	59	55	51	56	52	49	46
4	73	62	55	49	70	60	53	48	57	51	46	53	48	44	50	46	42	40
5	67	56	48	42	64	54	47	42	51	45	40	48	43	39	45	41	37	35
6	62	50	43	37	60	49	42	36	46	40	35	44	38	34	41	36	33	31
7	58	46	38	33	55	45	37	32	42	36	31	40	34	30	38	33	29	27
8	54	42	34	29	52	41	34	29	39	32	28	37	31	27	35	30	26	25
9	50	38	31	26	48	37	31	26	36	30	25	34	28	25	32	27	24	22
10	47	35	29	24	45	35	28	24	33	27	23	31	26	22	30	25	22	20

Zonal Lumen Summary

Zone	Lumens	%Lamp	%Fixture
0-30	1286	23.0	25.5
0-40	2124	37.9	42.0
0-60	3498	62.5	69.2
0-90	4389	78.4	86.9
0-180	5052	90.2	100.0

Typical VCP Percentages

	Height Along		Height Across	
Room Size (Ft.)	8.5'	10.0'	8.5'	10.0'
20 x 20	52	58	44	54
30 x 30	43	49	31	40
30 x 60	36	40	15	21
60 x 30	41	47	35	43
60 x 60	33	37	17	22

ORDERING INFORMATION

SAMPLE NUMBER: WN-232A-UNV-EB81-U

Length
Blank=2' or 4' Length
8T=8' (Tandem)

Series[1]
WN=Commercial Surface Wrap

Number of Lamps[2]
2=2 Lamps
(Not Included)

Wattage
17=17W T8 (24")
28T8=28W T8 (48")[6]
32=32W T8 (48")

Lens
A=Acrylic Refractor/Lens

Voltage[3]
120V=120 Volt
277V=277 Volt
347V=347 Volt
UNV=Universal Voltage 120-277[4]

Options
GL=Single Element Fuse
GM=Double Element Fuse
EL=Emergency Installed[5]

Ballast Type[3]
EB8_=T8 Electronic Instant Start. Total Harmonic Distortion < 10%
No. of Ballast
1 or 2

EB8_/PLUS=T8 Electronic Instant Start. High Ballast Factor >1.13. Total Harmonic Distortion < 20%
No. of Ballast
1 or 2

ER8_=T8 Electronic Program Rapid Start. Total Harmonic Distortion < 10%
No. of Ballast
1 or 2

ER8_/PLUS=T8 Electronic Program Start. High Ballast Factor >1.13. Total Harmonic Distortion < 10%
No. of Ballast
1 or 2

HPT8 Ballast
Ballast
HB8_L=T8 Electronic Instant Start. Low Ballast Factor .77
HB8_=T8 Electronic Instant Start. Ballast Factor .88
HB8_N=T8 Electronic Instant Start. Normal Ballast Factor 1.0
HB8_H=T8 Electronic Instant Start. High Ballast Factor 1.15-1.2
HR8_DIM=T8 Electronic Program Start Step Dimming. Ballast Factor .88
HR8_L=T8 Electronic Program Start. Low Ballast Factor .77
HR8_=T8 Electronic Program Start. Ballast Factor .88
HR8_H=T8 Electronic Program Start. High Ballast Factor 1.15-1.2

Options
DEC=Decorative End Cap
CRA=Continuous Row Aligner

Packaging
U=Unit Pack

ACCESSORIES

SCF=Fixed Stem Set (Specify Length)
SCS=Swivel Stem Set (Specify Length)
SCA=Adjustable 48" Stem Set
WN-2LT-DEC-ENDS=Decorative End Caps - 2 Lamps (2 pieces)
WN-CRA=Continuous Row Aligner (24 pieces)

NOTES: [1]Steel endplates with 7/8" KO standard for continuous row mounting. [2]2 point suspension recommended (up to 4'). [3]Products also available in non-US voltage and freqeuncies for international markets. [4]Not Available when specifying emergencies, voltage must be specified. [5]A low profile battery pack is required for installation with standard ballast cover (consult Cooper Lighting). [6]When utilizing 28WT8 lamps, HB Ballast must be specified. Other ballast restrictions may apply. Consult your Cooper Lighting Representative for availability and ordering information.

For complete product data, reference the Fluorescent Specification binder. Specifications & dimensions subject to change without notice. Consult your Cooper Lighting Representative for availability and ordering information.

SHIPPING INFORMATION

Catalog No.	Wt.
WN-217A	6 lbs.
WN-228T8A	8 lbs.
8TWN-228T8A	15 lbs.
WN-232A	8 lbs.
8TWN-232A	15 lbs.

CXTE: LED Exit/Incandesent Emergency Combo

Project:	
Type:	
Catalog #:	

UL LISTED

Features

- Energy-efficient LED technology in EXIT sign
- EZ snap-out chevron directional indicators
- Combines an EXIT sign & emergency light into one low-profile unit
- UL listed for damp locations & meets UL924, NFPA 101 Life Safety Code, NEC, OSHA, Local and State Codes

Electrical

- Dual 120V/277V voltage
- Charge rate/power "ON" LED indicator light and push-to-test switch for mandated code compliance testing
- LVD (low voltage disconnect) prevents battery from deep discharge
- 6V, 4.5Ah, sealed lead acid, maintenance-free, rechargeable battery
- Internal solid-state transfer switch automatically connects the internal battery to LED Board/lamp heads for minimum 90-minute emergency illumination
- Fully automatic solid-state, two-rate charger initiates battery charging to recharge a discharged battery in 24 hours.

Mounting

- Universal surface mount, wall or ceiling, with EZ-snap thermoplastic mounting canopy, which snaps into place making installation quick & easy.

Housing

- Injection-molded, engineering-grade, V-0 flame retardant, high-impact, thermoplastic in white or black finish

Options

- SDT: Self-Diagnostic (option SDT) continually diagnoses unit's performance and tests system (auto battery discharge once every 30 days and once every 12 months) to ensure reliable operation and to meet electrical and life safety codes
- Using the optional internal heater (-HTR) enables the unit to be used in cold environments (contact customer service for more information).

Illumination

- Standard with two 5.4 watt tungsten fully adjustable, glare-free incandescent emergency lighting heads
- High-performance smooth thermoplastic reflector and plastic lens for optimal light distribution
- Ultra bright, energy efficient, long-lasting Red or Green LED (exit sign illumination)

SALIDA faceplates also available.

Warranty

- Five Year Warranty on all electronics and housing. Batteries are pro-rated warranted for 5 years.

Dimensions

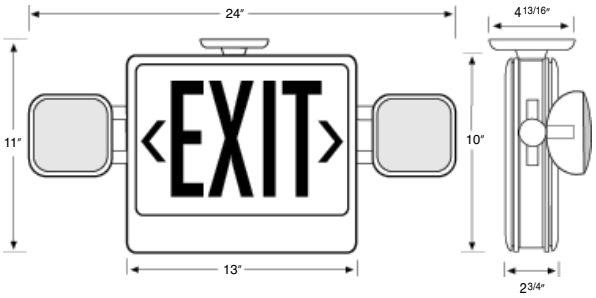

SDT

ORDERING INFORMATION

Model	Face #	Letter Color	Housing Color	Battery	Options
CXTE	U2 - Universal Single/Double	R - Red	W - White	Blank - EM (Standard)	SDT - Self Diagnostics
		G - Green	B - Black		RC - Remote Capable (22W Total)
					KR9 - 9 W Krypton Lamps (RC Only)
					KR5 - 5.4 W Krypton Lamps
					HTR - Internal Heater

Model	Face #	Letter Color	Housing Color	Battery	Options
_____ -	_____ -	_____ -	_____ -	_____ -	_____

Protected by one or more of the following patents: D440,336 S; 6,309,085 B1; 6,606,808 B2

BEST LIGHTING PRODUCTS • 1213 ETNA PARKWAY, PATASKALA OH 43062 • 740-964-1198 • www.bestlighting.net

Specifications and dimensions subject to change without notice.

EZXTE: LED Exit Sign

Project:	
Type:	
Catalog #:	

LISTED

Features

- Compact, low-profile design in neutral finish
- Energy-efficient LED technology
- EZ snap-out chevron directional indicators
- UL listed for damp locations & meets UL924, NFPA 101 Life Safety Code, NEC, OSHA, Local and State Codes

Electrical

- Dual 120V/277V voltage
- Charge rate/power "ON" LED indicator light and push-to-test switch for mandated code compliance testing
- LVD (low voltage disconnect) prevents battery from deep discharge
- Long-life, maintenance-free, rechargeable NiCd battery (EM model)
- Internal solid-state transfer switch automatically connects the internal battery to LED board for minimum 90-minute emergency illumination
- Fully automatic solid-state, two-rate charger initiates battery charging to recharge a discharged battery in 24 hours.

Mounting

- Universal surface mount, wall or ceiling, with EZ-snap thermoplastic mounting canopy, which snaps into place making installation quick & easy.

Housing

- Injection-molded, engineering-grade, V-0 flame retardant, high-impact, thermoplastic in white or black finish

Options

- SDT: Self-Diagnostic (option SDT) continually diagnoses unit's performance and tests system (auto battery discharge once every 30 days and once every 12 months) to ensure reliable operation and to meet electrical and life safety codes
- DC: Dual Circuit option on the AC-only unit enables it to be connected to two different (primary and secondary, one acting as a back-up for the other) supplies at the same time (contact customer service).

Illumination

- Ultra-bright, energy efficient, long-life Red or Green LED

SALIDA faceplates also available.

Warranty

- Five Year Warranty on all electronics and housing. Batteries are pro-rated warranted for 5 years.

Dimensions

Special Wording Sign samples

SDT 2C

ORDERING INFORMATION

Model	Face #	Letter Color	Housing Color	Battery	Options
EZXTE	U2 - Universal Single/Double	R - Red	W - White	Blank - AC Only	SDT - Self Diagnostics
		G - Green	B - Black	EM - NiCad Battery	2C - 2 Circuit Operation (ONLY 1 HOT CIRCUIT AT A TIME)
					SW - Special Wording

Model	Face #	Letter Color	Housing Color	Battery	Options
_____	- _____	- _____	- _____	- _____	- _____

R-1: Thermoplastic Emergency Light

Project:	
Type:	
Catalog #:	

UL LISTED

Features

- Compact, low-profile design in neutral finish
- Universal mounting plate with EZ Quick Connect for fast installation
- UL listed for damp locations & meets UL924, NFPA 101 Life Safety Code, NEC, OSHA, Local and State Codes

Electrical

- Dual 120V/277V voltage
- Charge rate/power "ON" LED indicator light and push-to-test switch for mandated code compliance testing
- LVD (low voltage disconnect) prevents battery from deep discharge
- 6V, 4.5Ah, sealed lead acid, maintenance-free, rechargeable battery
- Internal solid-state transfer switch automatically connects the internal battery to lamp heads for minimum 90-minute emergency illumination
- Fully automatic solid-state, two-rate charger initiates battery charging to recharge a discharged battery in 24 hours.

Mounting

- Surface mount via easy connect back plate, which fits most standard junction boxes and snaps into place making internal electrical connections
- Conduit mount using knockouts on the back plate

Housing

- Injection-molded, engineering-grade, V-0 flame retardant, high-impact, thermoplastic in white or black finish

Illumination

- Two fully-adjustable 5.4 watt, glare-free lighting heads
- High-performance smooth thermoplastic reflector and plastic lens for optimal light distribution

Options

- SDT: Self-Diagnostic (option SDT) continually diagnoses unit's performance and tests system (auto battery discharge once every 30 days and once every 12 months) to ensure reliable operation and to meet electrical and life safety codes
- Using the optional internal heater (-HTR) enables the unit to be used in cold environments (contact customer service)
- CP: 3 foot 3-wire cord and plug available

Warranty

- Five Year Warranty on all electronics and housing. Batteries are pro-rated warranted for 5 years.

Dimensions

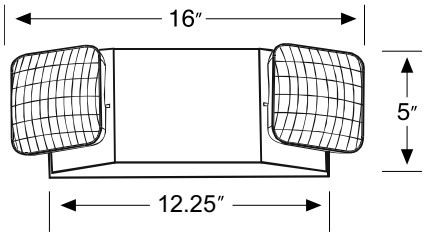

SDT

ORDERING INFORMATION

Model	Color	Options
R-1	Blank - White	SDT - Self Diagnostics
	B - Black	NiCd - NiCad Battery
		KR5 - 5.4W Krypton Lamps
		CP - Cord & Plug
		HTR - Internal Heater

Model	Color	Options
_____	- _____	- _____

Best Lighting Products

Project: _____

Type: _____

Catalog #: _____

Models RH-1 & RH-2
Remote Lamp Heads

Remote heads are available in either 6 Volt or 12 Volt configurations and several wattage options. Outdoor weatherproof remote heads (WP) are also available. Order the correct voltage and wattage combination to fit your application.

Catalog Number	No. of Heads	Lamp Voltage	Lamp Wattage
RH1-6V5	1	6 Volt	5.4
RH1-6V9	1	6 Volt	9
RH2-6V5	2	6 Volt	5.4
RH2-6V9	2	6 Volt	9
RH1-12V7	1	12 Volt	7.2
RH1-12V12	1	12 Volt	12
RH2-12V7	2	12 Volt	7.2
RH2-12V12	2	12 Volt	12
RH1-WP	1	6 Volt	5.4
RH2-WP	2	6 Volt	5.4

WLXTE & CWLXTE: Wet Location LED Exit/Incandesent Emergency Combo

Project:	
Type:	
Catalog #:	

WET LOCATION RATED

UL LISTED

Features

- UL listed for wet locations & meets UL924, NFPA 101 Life Safety Code, NEC, OSHA, Local and State Codes
- Fully gasketed, corrosion-resistant housing
- Energy efficient LED technology in EXIT sign
- EZ snap-out chevron directional indicators

Electrical

- Dual 120V/277V voltage
- Charge rate/power "ON" LED indicator light and push-to-test switch for mandated code compliance testing
- LVD (low voltage disconnect) prevents battery from deep discharge
- Long-life, maintenance-free, rechargeable NiCd battery (EM models)
- Internal solid-state transfer switch automatically connects the internal battery to LED Board/lamp heads for minimum 90-minute emergency illumination
- Fully automatic solid-state, two-rate charger initiates battery charging to recharge a discharged battery in 24 hours.

Mounting

- Knockouts for back mounting

Housing

- Corrosion-resistant, polycarbonate UV-stabilized housing
- Removable KO directional indicators
- Single face only
- Polycarbonate face plate

Options

- Using the optional internal heater (-HTR) enables the unit to be used in cold environments (contact customer service for more information).

Illumination

- Standard with two 5.4 watt tungsten, adjustable, glare-free lighting heads
- High-performance reflector and tempered glass lens for optimal light distribution.
- Ultra bright, energy efficient, long-lasting Red or Green LED (exit sign illumination)
- 6" EXIT letters

Warranty

- Five Year Warranty on all electronics and housing. Batteries are pro-rated warranted for 5 years.

Dimensions

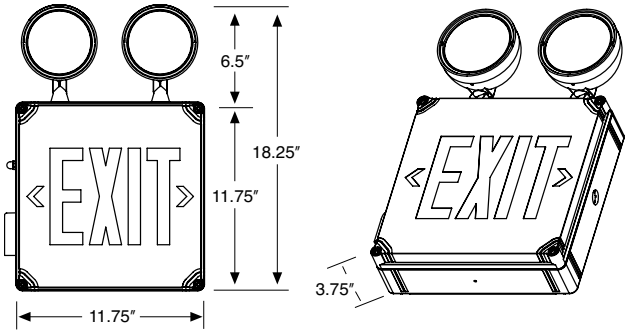

ORDERING INFORMATION

Model	Letter Color	Battery	Options
WLXTE	R - Red	Blank - AC Only	HTR - Internal Heater
	G - Green	EM - NiCad Battery Backup	
CWLXTE	R - Red	EM - NiCad Battery Backup	HTR - Internal Heater
	G - Green		

Model	Letter Color	Battery	Options
_____	- _____	- _____	- _____

BEST LIGHTING PRODUCTS • 1213 ETNA PARKWAY, PATASKALA OH 43062 • 740-964-1198 • www.bestlighting.net

Specifications and dimensions subject to change without notice.

EverLast® Huron Acrylic High Bay
(Patent Pending)

- **Lamp Life Rating:** 100,000 hours
- **Lumen Maintenance:** 70% over 100,000 hours
- **Light Output:** 5000K 82-90 CRI
- **IP Rating**: IP43
- **Voltage:** 120-277 Standard and 480 volt optional*
- **Vibration & Shock Resistance:** Excellent
- **Applications:** Showrooms, factories, supermarkets, gymnasiums, warehouses
- **Warranty:** 10 year warranty (see terms and conditions)
- **Ballast Type:** Electronic ballast with high power factor

Lamp Specifications

Wattage	Lumens	CRI	CCT (KELVIN)	Rated Life
EHBUS-CC-150W	13,300	82-85	4100	100,000 hours
EHBUS-CC-200W	17,700	82-85	4100	100,000 hours
EHBUS-CC-250W	22,100	86-90	4100	100,000 hours

Ballast Specifications

System Wattage	Input Voltage	Input Current	Input Freq.	Power Factor	THD
165	120-277V/480V*	1.35-0.61A/0.35A	50/60Hz	>0.95	<10%
215	120-277V/480V*	1.77-0.80A/0.45A	50/60Hz	>0.95	<10%
265	120-277V/480V*	2.21-1.00A/0.56A	50/60Hz	>0.95	<10%

EverLast® U.S. Made Acrylic High Bay Specifications

- Premium grade acrylic reflector with <2% Haze
- Conical drop lens lifts the main beam and breaks up lamp image
- Stainless steel roll-form clamp band
- US Patented optics improve performance by 20% over imported knock-offs
- Die cast aluminum ballast casing with corrosion-resistant white powder coat finish
- Electronic ballast with high power factor, flicker free instant re-strike
- Excellent vibration & shock resistance

Legal Notice: Full Spectrum Solutions owns proprietary rights in the EverLast® fixtures in the form of pending patent applications in the US and PCT applications for International protection. One or more features of this system may be protected by one or more patent applications. Patent questions can be addressed in writing to the Law offices of: Lowe, Hauptman, Ham & Berner, LLP located at Suite 300, 1700 Diagonal Road, Alexandria, Virginia 22314 -- Patent Attorneys.

EverLast® Huron Acrylic High Bay
(Patent Pending)

Photometric Data

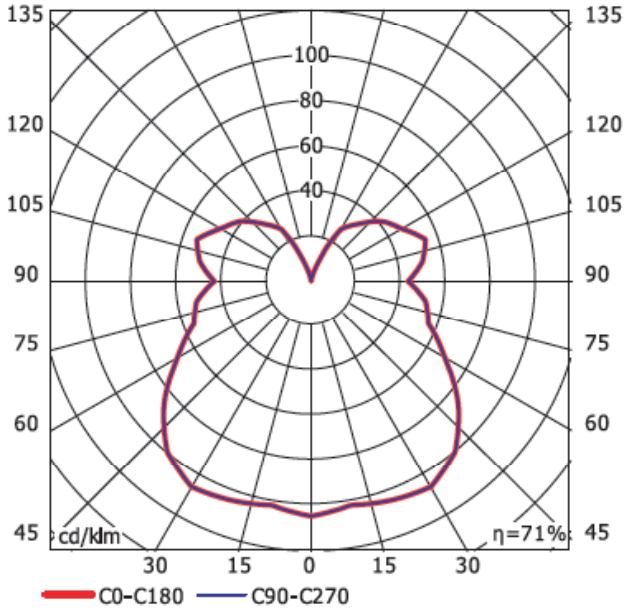

Dimensions

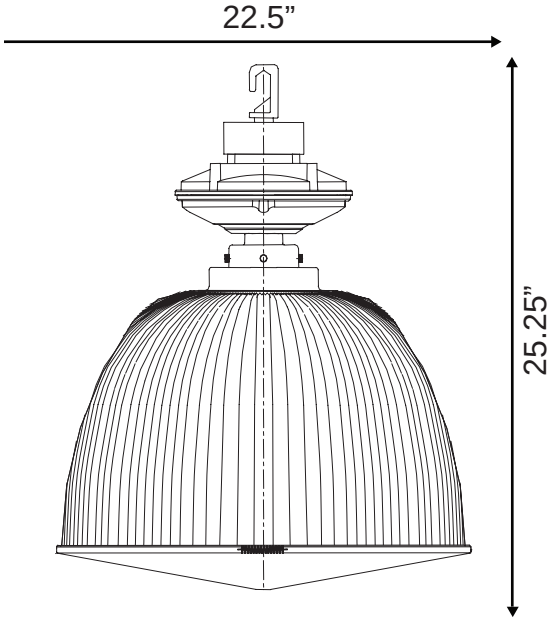

Legal Notice: Full Spectrum Solutions owns proprietary rights in the EverLast® fixtures in the form of pending patent applications in the US and PCT applications for International protection. One or more features of this system may be protected by one or more patent applications. Patent questions can be addressed in writing to the Law offices of: Lowe, Hauptman, Ham & Berner, LLP located at Suite 300, 1700 Diagonal Road, Alexandria, Virginia 22314 -- Patent Attorneys.

EverLast® Lighting A Product of Full Spectrum Solutions, Inc. 2009, All Rights Reserved

2

MENARD INC.

GENERAL OFFICES
EAU CLAIRE, WISCONSIN 54703
PHONE: (715) 876-5911
FAX: (715) 876-5901

PURCHASE ORDER

No. GO 624528

INVOICE TO: MENARD, INC.
4777 Menard Drive
Eau Claire, WI 54703

ATTENTION: (Circle One) CORP G.O. LUMBER G.O.

Phase I
11/4/2010

WIP # 1906-820

VENDOR NAME **Fax: (517) 783-2802**

Full Spectrum Solutions, Inc.
2021 Wellworth
Jackson, MI 49203
Attn: Brandon Marken (888) 383-7578x224
Brandon@Everlastlighting.com

SHIP TO (Same as above unless noted below)

MENARDS # 3283
402 N Sam Ralston Rd
Lebanon, IN 46052
Attn: Jim Anderson
Delivery Hours: 7:00 AM ~ 2:30 PM M~F

INVOICE IN DUPLICATE WITH
COPY OF BILL OF LADING

SHOW OUR PURCHASE ORDER NUMBER ON ALL INVOICES AND CORRESPONDENCE

DATE	TERMS:	DATE REQUIRED	SHIP VIA:	F.O.B.
11/3/2011	Net 30	ASAP	Bestway	Site

E-MAIL RECEIPT CONFIRMATION REQUIRED WITHIN 24 HOURS.

DESCRIPTION	QUANTITY ORDERED	UNIT PRICE	UNIT	EXTENDED PRICE
Emergency light Fixtures Induction Highbay, 250watt 4000K induction light with 22" clear acrylic reflector, 120volt, white ballast (no bottom lens) 6' white cord & white plug (twist lock)(L515P)	41	$289.81	Each	$11,882.21
Emergency light Fixtures Induction Highbay, 250watt 4000K induction light with 22" clear acrylic reflector, 120volt, white ballast (no bottom lens) 9' white cord & white plug (twist lock)(L515P)	14	$290.81	Each	$4,071.34
10 Year Warranty from date of delivery Cords prewired into fixture Installation hooks included Per Quote 40324 dated 11/1/10 from Brandon Marken				

Email Address: Jeff Sheehan **Office Phone: 715-876-4058**

ORDERED BY: Nancy Eldridge
APPROVED BY: ne 11/3/11

TOTAL PRICE **$15,953.55**

PLEASE NOTIFY US IMMEDIATELY IF YOU ARE UNABLE TO SHIP COMPLETE ORDER BY DATE SPECIFIED

BILL OF LADING & PACKING SLIPS MUST ACCOMPANY ALL FREIGHT SHIPMENTS

This purchase order is subject to the terms and conditions on the reverse side.

PAYMENT COPY

MENEHBUS-TES-CC-210W

EL INDUCTION

ST. CLAIR ACRYLIC HIGH BAY

EVERLAVST® INDUCTION HIGH-BAY LIGHTING FIXTURE

MANUFACTURED IN THE U. S. A.

Protected by U.S. Patent No. D659,897 4,839,781

SERIES: MENEHBUS-TES-CC210w

10 YEAR WARRANTY

DESCRIPTION:
- Series: MENEHBUS-TES-CC-210w
- Lamp Life Rating: 100,000 hours
- Proprietary lumen maintenance technology
- Light Output: 5000K, 82-90 CRI
- IP Rating: IP43

APPLICATIONS
- Warehouses
- Factories
- Retail Showrooms
- Gymnasiums
- Supermarkets
- Exhibition Halls

SPECIFICATIONS & PATENTED FEATURES
- Premium grade acrylic relfector with <2% Haze
- Conical lens lifts main beam and breaks diffuse image
- Stainless steel roll-form clamp band
- US Patented optics improve performance by 20% compared to competing fixtures
- Die cast aluminum ballast casing with corrosion-resistant white powder coat finish
- Electronic ballast with high power factor, flicker free instant re-strike
- Excellent vibration & shock resistance

ORDERING INFORMATION

SERIES

MENEHBUS-TES-CC210W — [ ] — [ ] — [ ] — [ ] — [ ] — [ ]

WATTAGE
- **210w** *210 WATT*

VOLTAGE
- **120** *120-277VAC*

COLOR TEMP
- **50** *5000K*
- **40*** *4000K*

CORD OPTIONS
- **X** *NONE*
- **L7*** *NEMA L7-15 277V*
- **L5*** *NEMA L5-15 120V*
- **L7-CW*** *L7-15 9FT WHITE CORD / BLACK PLUG*
- **L5-CW*** *L5-15 9FT WHITE CORD / BLACK PLUG*

WIRE GAURD
- **X** *NONE*
- **WG*** *WIRE GAURD*

DIMMING
- **X** *NONE*
- **VD*** *VARIABLE DIMMING*

MENARDS: **MENEHBUS-**TES-CC-210w-L7-X-X

BOLD = *STANDARD*
GREY * = *UPGRADE OPTIONS AVAILABLE UPON REQUEST*

© 2015 EVERLAST® LIGHTING, LLC. ALL RIGHTS RESERVED. PUBLISHED BY EVERLAST® LIGHTING, 2021 WELLWORTH AVENUE, JACKSON, MICHIGAN 49203.

REPRODUCTION IN PART OR WHOLE OF THIS DOCUMENT IN ANY COMMERCIAL USES INCLUDING PUBLICATION, BROADCASTING OR REDISTRIBUTION IN ANY MEDIUM WITHOUT THE PRIOR WRITTEN PERMISSION OF THE PUBLISHER IS PROHIBITED. 04-15

DIMENSIONS

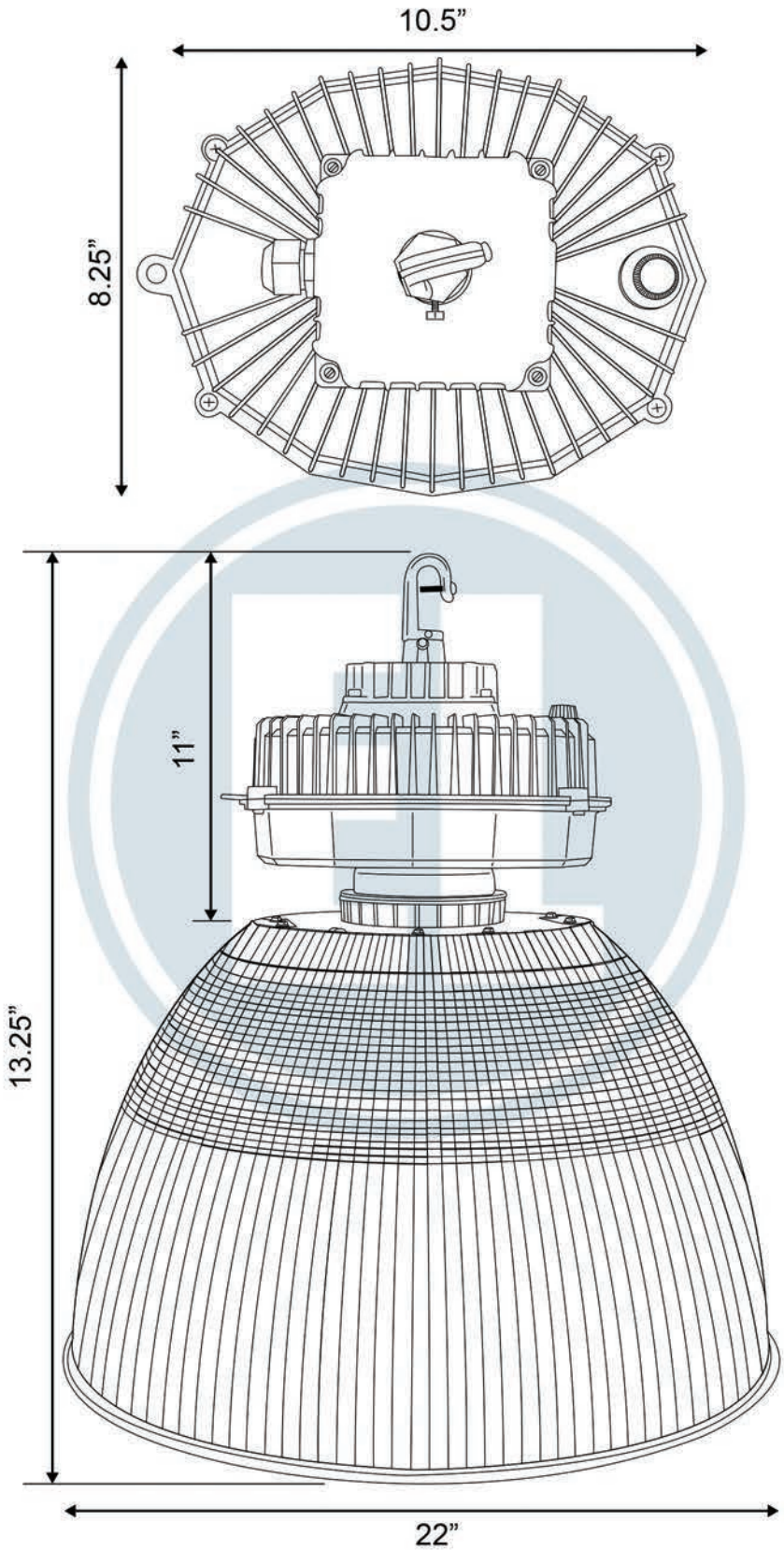

© 2015 EVERLAST® LIGHTING, LLC. ALL RIGHTS RESERVED. PUBLISHED BY EVERLAST® LIGHTING, 2021 WELLWORTH AVENUE, JACKSON, MICHIGAN 49203.

REPRODUCTION IN PART OR WHOLE OF THIS DOCUMENT IN ANY COMMERCIAL USES INCLUDING PUBLICATION, BROADCASTING OR REDISTRIBUTION IN ANY MEDIUM WITHOUT THE PRIOR WRITTEN PERMISSION OF THE PUBLISHER IS PROHIBITED. 04-15

THE LEGEND™ SERIES X

EL LED

EVERLAST® LED HIGHBAY LIGHTING FIXTURE

SERIES: EL-LED-HB-LG

10 YEAR WARRANTY

DESCRIPTION:

The Legend™ Series LED highbay fixture is the optimal indoor area lighting system. State of the art light dispersion and heat sinking technology create ideal beam angles, lower glare and high target efficiency.

FEATURES & BENEFITS

- Proprietary opaque acrylic over optic results in low glare levels and improved target efficiencies
- Cold-forged aluminum heat sink with anodized surface treatment is the most efficient on the market
- Integrated heat sink isolated driver compartment for maximum heat transfer

SPECIFICATIONS

APPLICATIONS

- Manufacturing Facilities / Warehouses
- Retail / Big Box
- Indoor Gymnasiums / Athletic Facilities

MOUNTING

- Integrated hook for easy tool-less pendant mount

LED & OPTICAL ASSEMBLY

- Light distribution: Type V
- 5000K 80 CRI LEDs
- LM-79 Tests in accordance with IESNA standards
- Utilizes Nichia 757D Emitters
- Meanwell HBG-240-48 Driver

APPROVALS AND/OR LISTINGS

- ETL Listed to UL1598
- IP65 Rated per ANSI C126.25-2009*
- Temperature rated -40°C to 50°C
- CE/RoHS compliant
- DLC Category 22

MATERIALS

- Die cast aluminum driver housing
- Aluminum or UV stabilized acrylic reflector / refractor
- Housing features black powder coat finish for corrosion resistance and heat transfer

ORDERING INFORMATION

SERIES		WATTAGE		VOLTAGE		COLOR TEMP		DIST TYPE		OPTIONS
EL-LED-HB-LG	–	200	–	L	–	50	–	X	—	OPTIONS EXAMPLE: L79W - AC
EL-LED-HB-LG LED HIGHBAY		**200*** 200 WATT 20,480 LUMENS (750mA)		**L** UNIVERSAL (120-277VAC)		**50** 5000K 80 CRI		**X** 120 DEGREE		

CORD AND PLUGS

L56W	L5-15 6' WHITE 120V TWIST LOCK
L59W	L5-15 9' WHITE 120V TWIST LOCK
L76W	L7-15 6' WHITE 277V TWIST LOCK
L79W	L7-15 9' WHITE 277V TWIST LOCK

MOUNTING HARDWARE

HK	HOOK

REFLECTORS

AC	ACRYLIC 22"
ASF	ACRYLIC 22" (SHORT FROSTED)

EVERLAST LIGHTING

EVERLASTLIGHT.COM **CALL US 888-383-7578**

© 2015 EVERLAST® LIGHTING, LLC. ALL RIGHTS RESERVED. PUBLISHED BY EVERLAST® LIGHTING, 2021 WELLWORTH AVENUE, JACKSON, MICHIGAN 49203. REPRODUCTION IN PART OR WHOLE OF THIS DOCUMENT IN ANY COMMERCIAL USES INCLUDING PUBLICATION, BROADCASTING OR REDISTRIBUTION IN ANY MEDIUM WITHOUT THE PRIOR WRITTEN PERMISSION OF THE PUBLISHER IS PROHIBITED. 08-15

IP65

DLC QPL LISTED

EL LED

EMITTER AND DRIVER SPECIFICATIONS							
SYSTEM WATTS (120-277VAC)	INITIAL DELIVERED LUMENS (5000K) 80 CRI	mA (# OF LEDS)	TOTAL CURRENT / FIXTURE				50K HOURS PROJECTED LUMEN MAINTENANCE
			120VAC	208VAC	240VAC	277VAC	
200	20,480	750 (244)	1.66	0.96	0.83	0.72	>93%

INPUT	
VOLTAGE RANGE	90-305VAC 127-431VDC
FREQUENCY RANGE	50/60 Hz
POWER FACTOR	.93 - .98
TOTAL HARMONIC DISTORTION	THD <10% WHEN OUTPUT LOADING
EFFICIENCY (230VAC/277VAC)	>93%

EMITTER SPECIFICATIONS: NICHIA 757D
DRIVER SPECIFICATIONS: MEANWELL HBG-240-48

Polar Plot (cd)

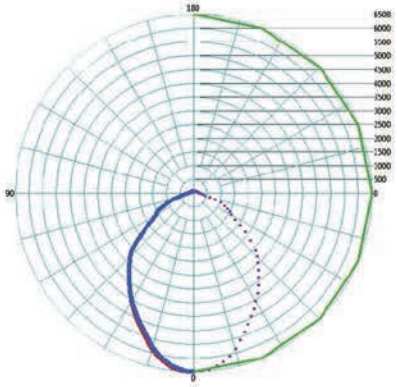

*ACRYLIC HB VERSION

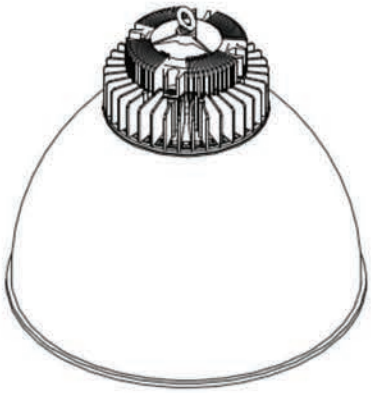

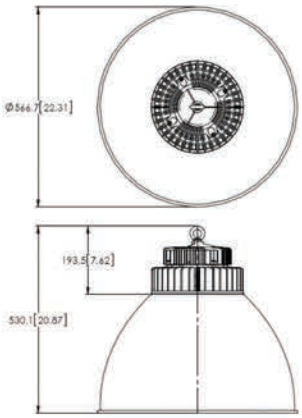

UNITS: MM [IN]

EVERLAST LIGHTING

EVERLASTLIGHT.COM

CALL US 888-383-7578

© 2015 EVERLAST® LIGHTING, LLC. ALL RIGHTS RESERVED. PUBLISHED BY EVERLAST® LIGHTING, 2021 WELLWORTH AVENUE, JACKSON, MICHIGAN 49203. REPRODUCTION IN PART OR WHOLE OF THIS DOCUMENT IN ANY COMMERCIAL USES INCLUDING PUBLICATION, BROADCASTING OR REDISTRIBUTION IN ANY MEDIUM WITHOUT THE PRIOR WRITTEN PERMISSION OF THE PUBLISHER IS PROHIBITED. 06-15

IP65

U. S. A.

MENARDS LED LEGEND™ SERIES

EL LED

EVERLAST® FROSTED ACRYLIC LED HIGHBAY LIGHTING FIXTURE

SERIES: EL-LED-LG

10 YEAR WARRANTY

DESCRIPTION:

The Legend™ Series LED High-Bay fixture is the optimal indoor area lighting system. State of the art light dispersion and heat sinking technology create ideal beam angles, lower glare and high target efficiency.

FEATURES & BENEFITS

- Proprietary opaque acrylic over optic results in low glare levels and improved target efficiencies
- Cold-forged aluminum heat sink with anodized surface treatment is the most efficient on the market
- Integrated heat sink isolated driver compartment for maximum heat transfer

SPECIFICATIONS

APPLICATIONS

- Manufacturing Facilities / Warehouses
- Retail / Big Box
- Indoor Gymnasiums / Athletic Facilities

MOUNTING

- Integrated hook for easy tool-less installation

LED & OPTICAL ASSEMBLY

- Light distribution: Type V
- 5000K 80 CRI LEDs
- LM-79 Tests in accordance with IESNA standards
- Utilizes OSRAM LED Emitters
- Meanwell HBG-240-48 Driver

APPROVALS AND/OR LISTINGS

- ETL Listed to UL1598
- IP65 Rated per ANSI C126.25-2009*
- Temperature rated -40°C to 50°C
- CE/RoHS compliant
- LM80 & TM21 data available upon request

MATERIALS

- Die cast aluminum driver housing
- UV stabilized frosted acrylic reflector / refractor ideal for applications requiring uplight
- Housing features white powder coat finish for corrosion resistance and heat transfer

ORDERING INFORMATION

SERIES		WATTAGE		VOLTAGE		DIST TYPE		DIMMING		COLOR TEMP		OPTIONS
EL-LED-LG	–	200	–	UL	–	AFS	–	X	–	50	—	OPTIONS EXAMPLE: L79W - HK
EL-LED-LG LED HIGHBAY		**200** 200 WATT 22,000 LUMENS		**UL** UNIVERSAL (120-277VAC)		**AFS** ACRYLIC FROSTED SHORT TYPE V		**X** STANDARD		**50** 5000K 80 CRI		

CORD AND PLUGS

L59W	L5-15 9' WHITE 120V TWIST LOCK
L79W	L7-15 9' WHITE 277V TWIST LOCK

MOUNTING HARDWARE

HK	HOOK

EMITTER AND DRIVER SPECIFICATIONS

SYSTEM WATTS (120-277VAC)	INITIAL DELIVERED LUMENS (5000K) 80 CRI	mA (# OF LEDS)	TOTAL CURRENT / FIXTURE			
			120VAC	208VAC	240VAC	277VAC
205	22,000	750 (244)	1.66	0.96	0.83	0.72

EVERLAST LIGHTING

EVERLASTLIGHT.COM CALL US 888-383-7578

© 2015 EVERLAST® LIGHTING, LLC. ALL RIGHTS RESERVED. PUBLISHED BY EVERLAST® LIGHTING, 2021 WELLWORTH AVENUE, JACKSON, MICHIGAN 49203. REPRODUCTION IN PART OR WHOLE OF THIS DOCUMENT IN ANY COMMERCIAL USES INCLUDING PUBLICATION, BROADCASTING OR REDISTRIBUTION IN ANY MEDIUM WITHOUT THE PRIOR WRITTEN PERMISSION OF THE PUBLISHER IS PROHIBITED. 08-15

IP65

DESCRIPTION

High efficacy low profile track fixture ideal for accent and display lighting applications. Featuring die cast construction with a simple low profile design. These lampholders are perfect for those applications where performance is required from a discreet source.

Catalog #		Type
Project	GREATER	
Comments		Date
Prepared by		

SPECIFICATION FEATURES

Quick Lock Adapter
Attaches electrically and mechanically anywhere along the track. Includes discrete locking tab that locks the luminaire on the track and allows for easy removal and repositioning.

Driver Housing
Die-cast and extruded aluminum housing incorporates the lamp control circuit.

Heat Sink
Aluminum die-cast heat sink provides exceptional thermal management to yield 70% lumen maintenance after 50,000 hours of operation.

Luminaire Arm
Arm allows the lamp housing tilt to adjust +/- 90° horizontally. This enables the ballast housing to remain static on the track creating a clean look while providing full aiming capabilities.

LED Light Engine
Equipped with (9) 3-Watt white LEDs. Configurable optic allows for 3 optical distributions and can be changed in the field to adjust to the current lighting need. CRI of 85.

Compliance
UL/cUL listed for use with Halo Power-Trac and Lazer Track. UL/cUL classified for Juno [See Footnote #1 in Ordering Information below], Lightolier [See Footnote #2 below], and Global [See Footnote #3 below] TEK/HTEK Track.
DesignLights™ Consortium Qualified. Refer to www.designlights.org Qualified Products List for details.

L806

L807

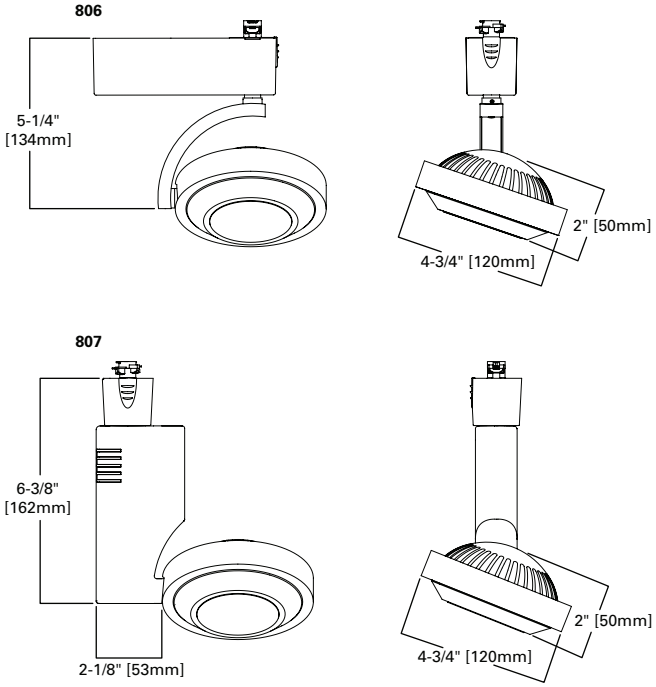

L806
L807
Halo LED

18W

DESIGNLIGHTS CONSORTIUM

3000 K	CBCP
Spot 15˚	11,057
Narrow Flood 22˚	8990
Flood 37˚	2480

Lighting Data
3000 K Spot

Lumens:	1253
Lumens per watt:	70.8
Watts at 120VAC	17.71

Energy Data:

Input Power: 17.71W
Power Factor: >.9
Input Current: .149 Amps

ORDERING INFORMATION

SAMPLE NUMBER: L806SP830AH (Halo or Lazer Track connector, Spot Distribution, 3000 K, with Aluminum Haze Finish)

Track	LED	Beam	CRI	CCT	Finish	Voltage
L=Halo and Lazer Power-Trac **LJ**=Juno® Track[1] **LL**=Lightolier® Track[2] **L2G**=Global® TEK or HTEK[3]	**806**=806 **807**=807	**FL**=Flood 37° **NF**=Narrow Flood 22° **SP**=Spot 15°	**80**=85	**30**=3000 K **40**=4000 K	**AH**=Aluminum Haze **MB**=Black **P**=White	**277**=277 VAC (Only with HTEK) **[Blank]**=120V

NOTES: 1. Juno® T single circuit and 2-circuit track contact. Juno® is a registered trademark of Juno® Lighting. **2.** Lightolier® Lyfespan 6000 single circuit and 2 circuit track contact. Lightolier® is a registered trademark of Philips Lighting. **3.** Global® is a registered trademark of Nordic Aluminum.

DesignLights™ Consortium Qualified. Refer to www.designlights.org Qualified Products List under Family Models for details.

PHOTOMETRICS

Color Temp = 3000K
4000K Multiplier = 1.25

0 deg Aiming Angle Horizontal Footcandles

	D	FC	L	W
Wide Spot: 15°	5	442	1.4	1.4
CBCP: 11057	7.5	197	2	2
Lumens: 1253	10	111	2.7	2.7
LpW: 70.8	12.5	71	3.4	3.4
	15	49	4.1	4.1
Narrow Flood: 22°	5	360	1.7	1.7
CBCP: 8990	7.5	160	2.5	2.5
Lumens: 1289	10	90	3.3	3.3
LpW: 72.4	12.5	58	4.2	4.2
	15	40	5	5
Flood: 37°	5	99	3.2	3.2
CBCP: 2480	7.5	44	4.8	4.8
Lumens: 1228	10	25	6.4	6.4
LpW: 69	12.5	16	8	8
	15	11	9.6	9.6

30 deg Aiming Angle Horizontal Footcandles

	D	FC	L	W	CB
Wide Spot: 15°	5	287	1.7	1.5	2.9
CBCP: 11057	7.5	128	2.6	2.3	4.3
Lumens: 1253	10	72	3.5	3.1	5.8
LpW: 70.8	12.5	46	4.3	3.8	7.2
	15	32	5.2	4.6	8.7
Narrow Flood: 22°	5	234	2.2	1.9	2.9
CBCP: 8990	7.5	104	3.3	2.8	4.3
Lumens: 1289	10	58	4.3	3.8	5.8
LpW: 72.4	12.5	37	5.4	4.7	7.2
	15	26	6.5	5.7	8.7
Flood: 37°	5	72	3.6	3.4	2.9
CBCP: 2480	7.5	32	5.5	5.2	4.3
Lumens: 1228	10	18	7.3	6.9	5.8
LpW: 69	12.5	12	9.1	8.6	7.2
	15	8	10.9	10.3	8.7

30 deg Aiming Angle Vertical Footcandles on Wall

	D	FC	L	W	CB
Wide Spot: 15°	3	180	2.6	1.5	5.2
CBCP: 11057	4	101	3.4	1.9	6.9
Lumens: 1253	5	65	4.3	2.4	8.7
LpW: 70.8	6	45	5.1	2.9	10.4
Narrow Flood: 22°	3	158	2.9	1.7	5.2
CBCP: 8990	4	89	3.9	2.3	6.9
Lumens: 1289	5	57	4.9	2.9	8.7
LpW: 72.4	6	40	5.8	3.5	10.4
Flood: 37°	3	67	3.2	2.7	5.2
CBCP: 2480	4	38	4.3	3.6	6.9
Lumens: 1228	5	24	5.4	4.5	8.7
LpW: 69	6	17	6.5	5.4	10.4

60 deg Aiming Angle Vertical Footcandles on Wall

	D	FC	L	W	CB
Wide Spot: 15°	3	798	1	0.9	1.7
CBCP: 11057	4	449	1.4	1.2	2.3
Lumens: 1253	5	287	1.7	1.5	2.9
LpW: 70.8	6	199	2.1	1.8	3.5
Narrow Flood: 22°	3	649	1.3	1.1	1.7
CBCP: 8990	4	365	1.7	1.5	2.3
Lumens: 1289	5	234	2.2	1.9	2.9
LpW: 72.4	6	162	2.6	2.3	3.5
Flood: 37°	3	201	2.2	2.1	1.7
CBCP: 2480	4	113	2.9	2.8	2.3
Lumens: 1228	5	72	3.6	3.4	2.9
LpW: 69	6	50	4.4	4.1	3.5

Notes and Definitions:
Beam spread is to 50% center beam candlepower (CBCP.)
D=Distance in feet to floor or wall.
FC=Footcandles on floor or wall at center beam aiming location.
L =Effective Visual Beam length in feet (50% of maximum footcandle level.)
W=Effective Visual Beam width in feet (50% of maximum footcandle level.)
CB=Distance in feet across or down to center beam location.

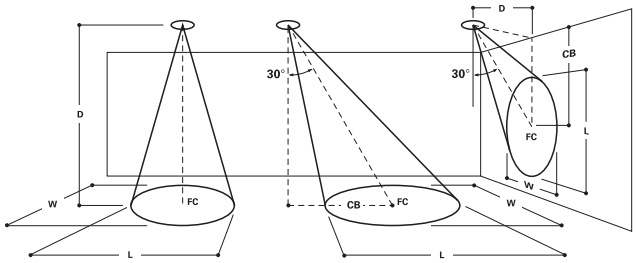

LED Track

HALO

Cooper Lighting
by EATON

Innovation you can rely on™

Technology Choice from **HALO**®

The sustainability of the Halo LED luminaire family dramatically reduces the maintenance and service costs over traditional sources. Light emitting diodes (LED) are solid state devices that do not have filaments or glass components that can break, causing the source to fail. Over 70% of the initial light output is maintained after 50,000 hours of operation. LED technology is perfect for almost all applications given there is limited infrared, low heat and no ultraviolet emissions.

Energy Savings

Environmental and legislative awareness continues to drive demand for energy-efficient lighting solutions. LED luminaires are high-efficiency alternatives to more traditional light sources, such as halogen, fluorescent and ceramic metal halide (CMH). Simply changing one fixture to Halo LED saves $365 over the life of the fixture.

- Energy Saving $235[1]
- Replacement Lamp Savings $125
- Savings based on twelve hours of average use per day and 50,000 hours lifetime of the L806HO vs. 70W CMH

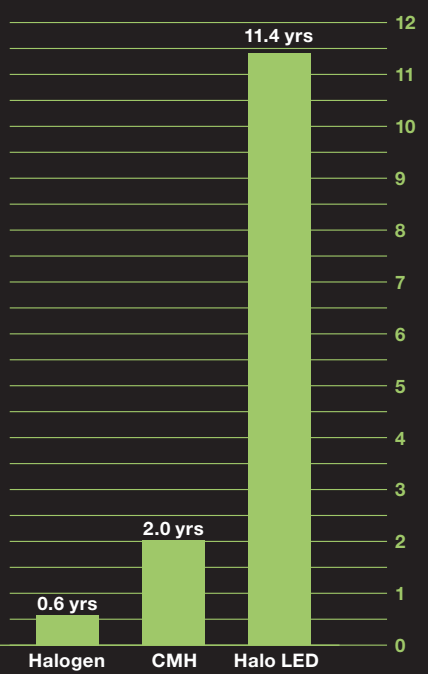

Life Comparison[2]

[1] Average energy cost of $0.11 per KWH
[2] 4,380 hours/year (12 hours per day)

L806SM / L807SM

The Halo L806SM and L807SM LED track fixture family are high-efficacy with a low-profile design. Ideal for accent and display lighting applications, the L806SM and L807SM feature die-cast aluminum construction in two sleek, simple designs. Available in multiple color temperatures and beam distributions, these luminaires are perfect for those applications where simplicity and performance are required.

Features

- 1073 lumen package @ 3000K
- 89 LPW @ 12.06W
- Various optical distributions available
- 80+ CRI
- 2700K, 3000K, and 4000K color temperatures
- Three finishes: White, Matte Black, Aluminum Haze
- Available on multiple Halo Power-Trac systems as well as Juno®, Lightolier® and Global® track systems
- L70 @ 50,000 hours
- Five-year warranty

L806SM

L807SM

Ordering Information

Sample Number: L806SP830AH (Halo or Lazer Track connector, Spot Distribution, 3000K, with Aluminum Haze Finish)

Track	LED	Beam	CRI	CCT	Finish	Voltage
L=Halo and Lazer Power-Trac **LJ**=Juno® Track[1] **LL**=Lightolier® Track[2] **L2G**=Global® TEK or HTEK[3]	**806SM**=806SM **807SM**=807SM	**SP**=Spot 14° **WS**=Wide Spot 18° **NF**=Narrow Flood 28° **FL**=Flood 44°	**80**=80+	**27**=2700K **30**=3000K **40**=4000K	**AH**=Aluminum Haze **MB**=Black **P**=White	**277**=277V (Only with HTEK) **[Blank]**=120V

NOTES: 1. Juno® T single circuit and 2-circuit track contact. Juno® is a registered trademark of Juno® Lighting. **2.** Lightolier® Lyfespan 6000 single circuit and 2 circuit track contact. Lightolier® is a registered trademark of Philips Lighting. **3.** Global® is a registered trademark of Nordic Aluminum.

Energy Data

L806 / L807

3000K	CBCP
Spot 14°	11,119
Wide Spot 18°	6482
Narrow Flood 28°	2639
Flood 44°	1622

Lighting Data - 3000K Spot	
Lumens	1073
Lumens per Watt	89
Watts at 120VAC	12.06

Energy Data	
Input Power	12.06W
Power Factor	>.9
Input Current	.149 Amps

Dimensions

L806SM

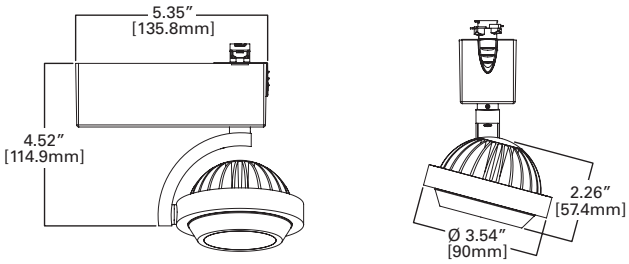

L807SM

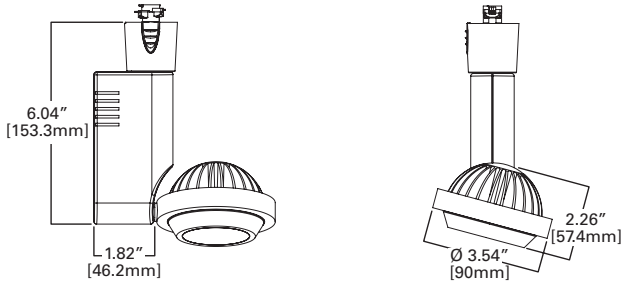

Photometry

CCT= 3000K
2700K Multiplier= 0.92
4000K Multiplier= 1.05

Spot: 14°
CBCP: 11,119
Lumens: 1073
LPW: 89

0° Aiming Angle Horizontal Footcandles				30° Aiming Angle Horizontal Footcandles					30° Aiming Angle Vertical Footcandles on Wall				
D	FC	L	W	D	FC	L	W	CB	D	FC	L	W	CB
4	686	1.5	1.5	4	445	2	1.6	2.3	2	428	2.5	1.3	3.5
7	224	2.6	2.6	7	145	3.5	2.8	4	4	107	5	2.7	6.9
9	135	3.3	3.3	9	88	4.4	3.6	5.2	6	48	7.5	4	10.4
13	65	4.8	4.8	13	42	6.4	5.2	7.5	10	17	12.5	6.6	17.3
16	43	6	6	16	28	7.9	6.4	9.2	12	12	15	8	20.8

Wide Spot: 18°
CBCP: 6,482
Lumens: 1000
LPW: 83

D	FC	L	W	D	FC	L	W	CB	D	FC	L	W	CB
4	400	2	2	4	261	2.6	2.3	2.3	2	257	3.2	1.8	3.5
7	131	3.5	3.5	7	85	4.5	4	4	4	64	6.5	3.5	6.9
9	79	4.6	4.6	9	52	5.8	5.1	5.2	6	29	9.7	5.3	10.4
13	38	6.6	6.6	13	25	8.4	7.3	7.5	10	10	16.2	8.8	17.3
16	25	8.1	8.1	16	16	10.3	9	9.2	12	7	19.4	10.6	20.8

Narrow Flood: 28°
CBCP: 2,639
Lumens: 934
LPW: 75

D	FC	L	W	D	FC	L	W	CB	D	FC	L	W	CB
4	165	3.1	3.1	4	115	4	3.6	2.3	2	125	4.2	2.7	3.5
7	54	5.5	5.5	7	38	6.9	6.2	4	4	31	8.4	5.4	6.9
9	33	7.1	7.1	9	23	8.9	8	5.2	6	14	12.6	8	10.4
13	16	10.2	10.2	13	11	12.9	11.6	7.5	10	5	21.1	13.4	17.3
16	10	12.6	12.6	16	7	15.9	14.2	9.2	12	3	25.3	16.1	20.8

Flood: 44°
CBCP: 1,622
Lumens: 919
LPW: 77

D	FC	L	W	D	FC	L	W	CB	D	FC	L	W	CB
4	101	4.1	4.1	4	76	5	4.6	2.3	2	117	3.8	3.1	3.5
7	33	7.2	7.2	7	25	8.7	8	4	4	29	7.5	6.2	6.9
9	20	9.3	9.3	9	15	11.2	10.3	5.2	6	13	11.3	9.3	10.4
13	10	13.4	13.4	13	7	16.2	14.9	7.5	10	5	18.8	15.5	17.3
16	6	16.6	16.6	16	5	19.9	18.3	9.2	12	3	22.6	18.7	20.8

Notes and Definitions
Beam spread is to 50% center beam candlepower (CBCP).
D= Distance in feet to floor or wall.
FC= Footcandles on floor or wall at center beam aiming location.
L= Effective Visual Beam length in feet (50% of maximum footcandle level)
W= Effective Visual Beam width in feet (50% of maximum footcandle level)
CB= Distance in feet across or down to center beam location

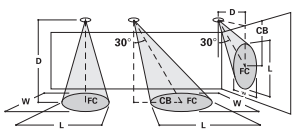

L806 / L807

The Halo L806 and L807 LED track fixture family are high-efficacy with a low-profile design. Ideal for accent and display lighting applications, the L806 and L807 feature die-cast aluminum construction in two sleek, simple designs. Available in multiple color temperatures and beam distributions, these luminaires are perfect for those applications where simplicity and performance are required.

Features

- 1250 lumen package @ 3000K
- 70 LPW @ 17W
- Various optical distributions available
- 80+ CRI
- 2700K, 3000K, and 4000K color temperatures
- Three finishes: White, Matte Black, Aluminum Haze
- Available on multiple Halo Power-Trac systems as well as Juno®, Lightolier® and Global® track systems
- DLC compliant
- L70 @ 50,000 hours
- Five-year warranty

L806

L807

Ordering Information

Sample Number: L806SP830AH (Halo or Lazer Track connector, Spot Distribution, 3000K, with Aluminum Haze Finish)

Track	LED	Beam	CRI	CCT	Finish	Voltage
L=Halo and Lazer Power-Trac **LJ**=Juno® Track[1] **LL**=Lightolier® Track[2] **L2G**=Global® TEK or HTEK[3]	**806**=806 **807**=807	**SP**=Spot 15° **NF**=Narrow Flood 22° **FL**=Flood 37°	**80**=80+	**27**=2700K **30**=3000K **40**=4000K	**AH**=Aluminum Haze **MB**=Black **P**=White	**277**=277V (Only with HTEK) **[Blank]**=120V

NOTES: 1. Juno® T single circuit and 2-circuit track contact. Juno® is a registered trademark of Juno® Lighting. **2.** Lightolier® Lyfespan 6000 single circuit and 2 circuit track contact. Lightolier® is a registered trademark of Philips Lighting. **3.** Global® is a registered trademark of Nordic Aluminum.

DesignLights Consortium® Qualified. Refer to www.designlights.org Qualified Products List under Family Models for details.

Energy Data

L806 / L807

3000K	CBCP	Lighting Data - 3000K Spot		Energy Data	
Spot 15°	11,057	Lumens	1253	Input Power	17.71W
Narrow Flood 22°	8990	Lumens per Watt	70.8	Power Factor	>.9
Flood 37°	2480	Watts at 120VAC	17.71	Input Current	.149 Amps

Dimensions

L806

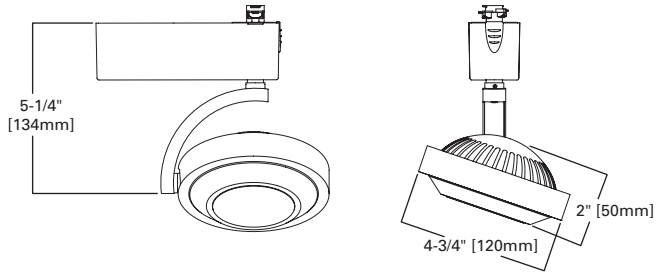

L807

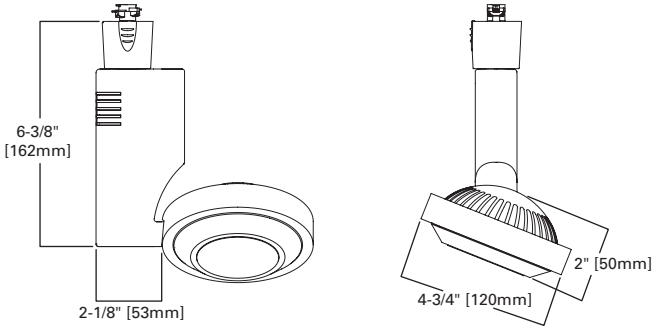

Photometry

CCT= 3000K
4000K Multiplier= 1.25

	0° Aiming Angle Horizontal Footcandles				30° Aiming Angle Horizontal Footcandles					30° Aiming Angle Vertical Footcandles on Wall					60° Aiming Angle Vertical Footcandles on Wall				
	D	FC	L	W	D	FC	L	W	CB	D	FC	L	W	CB	D	FC	L	W	CB
Wide Spot: 15°	5	442	1.4	1.4	5	287	1.7	1.5	2.9	3	180	2.6	1.5	5.2	3	798	1	0.9	1.7
CBCP: 11,057	7.5	197	2	2	7.5	128	2.6	2.3	4.3	4	101	3.4	1.9	6.9	4	449	1.4	1.2	2.3
Lumens: 1253	10	111	2.7	2.7	10	72	3.5	3.1	5.8	5	65	4.3	2.4	8.7	5	287	1.7	1.5	2.9
LPW: 70.8	12.5	71	3.4	3.4	12.5	46	4.3	3.8	7.2	6	45	5.1	2.9	10.4	6	199	2.1	1.8	3.5
	15.0	49	4.1	4.1	15	32	5.2	4.6	8.7										
	D	FC	L	W	D	FC	L	W	CB	D	FC	L	W	CB	D	FC	L	W	CB
Narrow Flood: 22°	5	360	1.7	1.7	5	234	2.2	1.9	2.9	3	158	2.9	1.7	5.2	3	649	1.3	1.1	1.7
CBCP: 8,990	7.5	160	2.5	2.5	7.5	104	3.3	2.8	4.3	4	89	3.9	2.3	6.9	4	365	1.7	1.5	2.3
Lumens: 1289	10	90	3.3	3.3	10	58	4.3	3.8	5.8	5	57	4.9	2.9	8.7	5	234	2.2	1.9	2.9
LPW: 72.4	12.5	58	4.2	4.2	12.5	37	5.4	4.7	7.2	6	40	5.8	3.5	10.4	6	162	2.6	2.3	3.5
	15	40	5	5	15	26	6.5	5.7	8.7										
	D	FC	L	W	D	FC	L	W	CB	D	FC	L	W	CB	D	FC	L	W	CB
Flood: 37°	5	99	3.2	3.2	5	72	3.6	3.4	2.9	3	67	3.2	2.7	5.2	3	201	2.2	2.1	1.7
CBCP: 2,480	7.5	44	4.8	4.8	7.5	32	5.5	5.2	4.3	4	38	4.3	3.6	6.9	4	113	2.9	2.8	2.3
Lumens: 1228	10	25	6.4	6.4	10	18	7.3	6.9	5.8	5	24	5.4	4.5	8.7	5	72	3.6	3.4	2.9
LPW: 69	12.5	16	8	8	12.5	12	9.1	8.6	7.2	6	17	6.5	5.4	10.4	6	50	4.4	4.1	3.5
	15	11	9.6	9.6	15	8	10.9	10.3	8.7										

Notes and Definitions
Beam spread is to 50% center beam candlepower (CBCP).
D= Distance in feet to floor or wall.
FC= Footcandles on floor or wall at center beam aiming location.
L= Effective Visual Beam length in feet (50% of maximum footcandle level)
W= Effective Visual Beam width in feet (50% of maximum footcandle level)
CB= Distance in feet across or down to center beam location

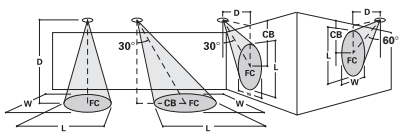

L806HO / L807HO

The Halo L806HO and L807HO LED high-efficacy, low-profile track fixture is ideal for accent and display lighting applications. Featuring die-cast construction with a simple low profile design, these lampholders are perfect for those applications where performance is required from a discreet source.

Features

- 2600 lumen package @ 3000K
- 73 LPW @ 34W
- Various optical distributions available
- 80+ CRI
- 2700K, 3000K, and 4000K color temperatures
- Three finishes: White, Matte Black, Aluminum Haze
- Available on multiple Halo Power-Trac systems as well as Juno®, Lightolier® and Global® track systems
- DLC compliant
- L70 @ 50,000 hrs.
- Five-year warranty

L806HO

L807HO

Ordering Information

Sample Number: L806HOSP8030AH (Halo or Lazer Track connector, Spot Distribution, 3000K, with Aluminum Haze Finish)

Track	LED	Beam	CRI	CCT	Finish	Voltage
L=Halo and Lazer Power-Trac **LJ**=Juno® Track[1] **LL**=Lightolier® Track[2] **L2G**=Global® TEK or HTEK[3]	**806HO**=806HO **807HO**=807HO	**SP**=Spot 11° **WS**=Wide Spot 18° **NF**=Narrow Flood 25° **FL**=Flood 45°	**80**=80+	**27**=2700K **30**=3000K **40**=4000K	**AH**=Aluminum Haze **MB**=Black **P**=White	**277**=277V (Only with HTEK) **[Blank]**=120V

NOTES: 1. Juno® T single circuit and 2-circuit track contact. Juno® is a registered trademark of Juno® Lighting. **2.** Lightolier® Lyfespan 6000 single circuit and 2 circuit track contact. Lightolier® is a registered trademark of Philips Lighting. **3.** Global® is a registered trademark of Nordic Aluminum.

DesignLights Consortium® Qualified. Refer to www.designlights.org Qualified Products List under Family Models for details.

Energy Data

L806HO / L807HO

3000K	CBCP
Spot 11°	32,900
Wide Spot 18°	26,250
Narrow Flood 25°	10,800
Flood 45°	4,600

Lighting Data - 3000K Spot	
Lumens	2600
Lumens per Watt	76

Energy Data	
Input Power	34.12W
Power Factor	>.9
Input Current	.30 Amps

Dimensions

L806HO

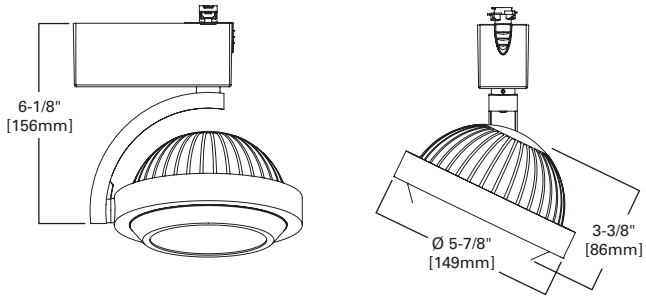

L807HO

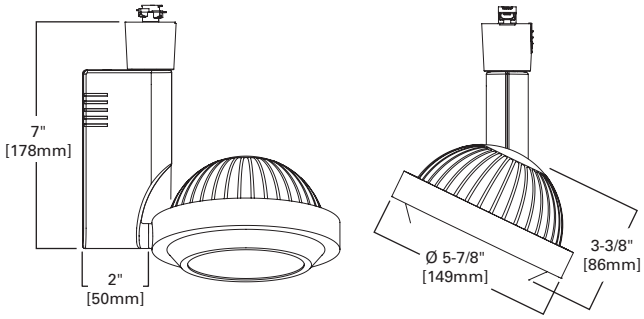

Photometry

CCT= 3000K
4000K Multiplier= 1.25

0° Aiming Angle Horizontal Footcandles

	D	FC	L	W
Spot: 11°	4	2055	1.4	1.4
CBCP: 32,900	7	671	2.4	2.4
Lumens: 2499	9	406	3.1	3.1
LPW: 73	13	195	4.5	4.5
	16	128	5.5	5.5
	D	**FC**	**L**	**W**
Wide Spot: 18°	4	1641	1.5	1.5
CBCP: 26,250	7	536	2.6	2.6
Lumens: 2609	9	324	3.4	3.4
LPW: 76	13	155	4.9	4.9
	16	103	6	6
	D	**FC**	**L**	**W**
Narrow Flood: 25°	4	676	2.7	2.7
CBCP: 10,800	7	221	4.7	4.7
Lumens: 2663	9	133	6.1	6.1
LPW: 77	13	64	8.8	8.8
	16	42	10.8	10.8
	D	**FC**	**L**	**W**
Flood: 45°	4	287	4.3	4.3
CBCP: 4,600	7	94	7.5	7.5
Lumens: 2794	9	57	9.6	9.6
LPW: 80	13	27	13.9	13.9
	16	18	17.1	17.1

30° Aiming Angle Horizontal Footcandles

	D	FC	L	W	CB
Spot: 11°	4	1335	1.6	1.5	2.3
CBCP: 32,900	7	436	2.8	2.6	4
Lumens: 2499	9	264	3.5	3.3	5.2
LPW: 73	13	126	5.1	4.8	7.5
	16	83	6.3	5.9	9.2
	D	**FC**	**L**	**W**	**CB**
Wide Spot: 18°	4	1066	2.1	1.8	2.3
CBCP: 26,250	7	348	3.6	3.2	4
Lumens: 2609	9	211	4.7	4.1	5.2
LPW: 76	13	101	6.7	5.9	7.5
	16	67	8.3	7.2	9.2
	D	**FC**	**L**	**W**	**CB**
Narrow Flood: 25°	4	447	3.4	3.1	2.3
CBCP: 10,800	7	146	6	5.4	4
Lumens: 2663	9	88	7.7	6.9	5.2
LPW: 77	13	42	11.1	9.9	7.5
	16	28	13.7	12.2	9.2
	D	**FC**	**L**	**W**	**CB**
Flood: 45°	4	221	5.1	4.7	2.3
CBCP: 4,600	7	72	8.9	8.2	4
Lumens: 2794	9	44	11.5	10.5	5.2
LPW: 80	13	21	16.5	15.2	7.5
	16	14	20.4	18.7	9.2

30° Aiming Angle Vertical Footcandles on Wall

	D	FC	L	W	CB
Spot: 11°	2	1196	2.2	1.1	3.5
CBCP: 32,900	4	299	4.4	2.3	6.9
Lumens: 2499	6	133	6.6	3.4	10.4
LPW: 73	10	48	11	5.7	17.3
	12	33	13.2	6.9	20.8
	D	**FC**	**L**	**W**	**CB**
Wide Spot: 18°	2	896	2.7	1.5	3.5
CBCP: 26,250	4	224	5.4	2.9	6.9
Lumens: 2609	6	100	8.1	4.4	10.4
LPW: 76	10	36	13.4	7.3	17.3
	12	25	16.1	8.8	20.8
	D	**FC**	**L**	**W**	**CB**
Narrow Flood: 25°	2	464	3.8	2.3	3.5
CBCP: 10,800	4	116	7.6	4.7	6.9
Lumens: 2663	6	52	11.4	7	10.4
LPW: 77	10	19	18.9	11.7	17.3
	12	13	22.7	14.1	20.8
	D	**FC**	**L**	**W**	**CB**
Flood: 45°	2	347	3.8	3.2	3.5
CBCP: 4,600	4	87	7.5	6.3	6.9
Lumens: 2794	6	39	11.3	9.5	10.4
LPW: 80	10	14	18.8	15.8	17.3
	12	10	22.5	19	20.8

Notes and Definitions
Beam spread is to 50% center beam candlepower (CBCP).
D= Distance in feet to floor or wall.
FC= Footcandles on floor or wall at center beam aiming location.
L= Effective Visual Beam length in feet (50% of maximum footcandle level)
W= Effective Visual Beam width in feet (50% of maximum footcandle level)
CB= Distance in feet across or down to center beam location

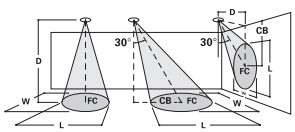

L802

Halo Span LED Wall Wash fixture family is designed for use as a downlight or wall wash. The Span LED luminaire is ideal for applications where a wide even distribution of light is desired. The luminaire can be used to wash a wall with light or as a downlight to evenly illuminate a counter. Utilizing LED technology and an electronic driver, it is extremely energy efficient.

Features

- Three finishes: White, Matte Black, Aluminum Haze
- 3000K and 4000K color temperatures
- 80+ CRI
- Lumen output: 2000, 3000, or 4000
- L70 and 50,000 hours
- Easy installation yields simple retrofit opportunities with various connector options
- Five-year limited warranty

Ordering Information

Sample Number: L80228030P

Track	Lamp Type	Series	Output	CRI	CCT	Finish	Voltage
L=Halo and Lazer Power-Trac **LA**=Halo Architectural Track **LF**=Halo Architectural Flex Track **LJ**=Juno® Track[1] **LL**=Lightolier® Track[2] **L2G**=Global® TEK or HTEK[3]	**8**=LED	**02**=SPAN	**2**=2000 lm **3**=3000 lm **4**=4000 lm	**80**=80+	**30**=3000K **40**=4000K	**AH**=Aluminum Haze **MB**=Black (L and LA only) **P**=White (L and LA only)	**277**=277V (Only with LA and L2G) **[Blank]**=120V

NOTES: 1. Juno® T single circuit and 2-circuit track contact. Juno® is a registered trademark of Juno® Lighting. **2.** Lightolier® Lyfespan 6000 single circuit and 2 circuit track contact. Lightolier® is a registered trademark of Philips Lighting. **3.** Global® is a registered trademark of Nordic Aluminum.

Dimensions

LF - Flexible Track

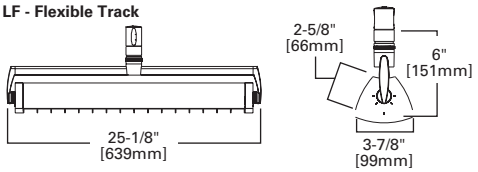

L - Power Trac

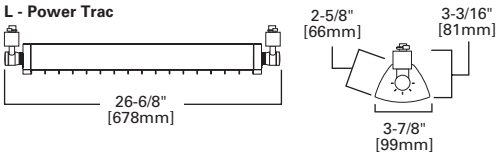

LA - Architectural Track

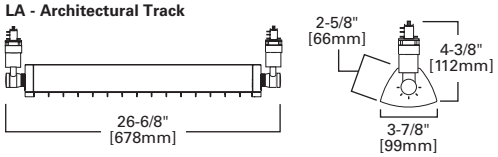

Photometry

High Output

CCT= 3000K
4000K Multiplier= 1.05

	0° Aiming Angle Horizontal Footcandles				30° Aiming Angle Horizontal Footcandles					30° Aiming Angle Vertical Footcandles on Wall				
L80228030	**D**	**FC**	**L**	**W**	**D**	**FC**	**L**	**W**	**CB**	**D**	**FC**	**L**	**W**	**CB**
Lumens: 2119	4	51	8.3	8.4	4	45	8.2	8.5	2.3	2	117	4.1	4.7	3.5
LpW: 85	7	17	14.6	14.6	7	15	14.4	14.9	4	4	29	8.3	9.3	6.9
120V Input Watts: 24.9	9	10	18.7	18.8	9	9	18.5	19.2	5.2	6	13	12.4	14	10.4
Line Amps: 0.209	13	5	27	27.2	13	4	26.7	27.7	7.5	10	5	20.7	23.4	17.3
Power Factor: >.99	16	3	33.3	33.4	16	3	32.9	34.1	9.2	12	3	24.8	28	20.8
L80238030	**D**	**FC**	**L**	**W**	**D**	**FC**	**L**	**W**	**CB**	**D**	**FC**	**L**	**W**	**CB**
Lumens: 3342	4	79	9.2	8.9	4	71	8.7	9.1	2.3	2	225	4.1	4.5	3.5
LpW: 90	7	26	16.1	15.5	7	23	15.2	15.9	4	4	56	8.1	9.1	6.9
120V Input Watts: 37.0	9	16	20.7	20	9	14	19.6	20.4	5.2	6	25	12.2	13.6	10.4
Line Amps: 0.31	13	7	29.8	28.9	13	7	28.3	29.5	7.5	10	9	20.3	22.7	17.3
Power Factor: >.99	16	5	36.7	35.5	16	4	34.8	36.3	9.2	12	6	24.4	27.2	20.8
L80248030	**D**	**FC**	**L**	**W**	**D**	**FC**	**L**	**W**	**CB**	**D**	**FC**	**L**	**W**	**CB**
Lumens: 4058	4	98	8.3	8.3	4	87	8.2	8.5	2.3	2	223	4.2	4.7	3.5
LpW: 83	7	32	14.5	14.6	7	28	14.3	14.9	4	4	56	8.3	9.4	6.9
120V Input Watts: 49.0	9	19	18.6	18.8	9	17	18.4	19.1	5.2	6	25	12.5	14.1	10.4
Line Amps: 0.41	13	9	26.9	27.1	13	8	26.6	27.6	7.5	10	9	20.8	23.5	17.3
Power Factor: >.99	16	6	33.1	33.4	16	5	32.8	34	9.2	12	6	25	28.1	20.8

Notes and Definitions
Beam spread is to 50% center beam candlepower (CBCP).
D= Distance in feet to floor or wall.
FC= Footcandles on floor or wall at center beam aiming location.
L= Effective Visual Beam length in feet (50% of maximum footcandle level)
W= Effective Visual Beam width in feet (50% of maximum footcandle level)
CB= Distance in feet across or down to center beam location

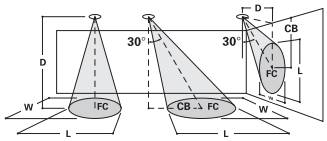

Stasis LED Large

The Stasis LED Large offers the high-intensity lighting often required for retail and grocery applications and can easily replace more traditional high-wattage CMH sources. The patented optical design yields clean patterns of light with optimal cut-off and minimized source brightness. A variety of optical packages and the ability to field change the distribution sets this luminaire apart from all other LED track fixtures. Clean lines and aesthetic design fit easily into all applications and become part of the design concept.

Features

- Three finishes: White, Matte Black, Aluminum Haze
- 3000K and 4000K color temperatures
- High 85 CRI
- Four field-changeable optical distributions:
  - Spot 15°
  - Narrow flood 25°
  - Flood 37°
  - Wall wash
- Wall wash luminaire is available in both 18W or 38W and ships with solite lens
- Easy installation yields simple retrofit opportunities with various connector options
- Superior light quality when compared to traditional light sources
- Five-year limited warranty

Ordering Information

Sample Number: L805LRGFL830P

Track	LED	Size	Beam	CRI	CCT	Finish	Voltage	Power	Accessories
L=Halo and Lazer Power-Trac **LA**=Halo Architectural Track **LF**=Halo Architectural Flex Track **LJ**=Juno® Track[1] **LL**=Lightolier® Track[2] **L2G**=Global® TEK or HTEK[3]	**805**=805	**LRG**=Large 38W	**SP**=Spot 15° **NF**=Narrow Flood 25° **FL**=Flood 37° **WW**=Wall Wash	**8**=85	**30**=3000K **40**=4000K	**AH**=Aluminum Haze **MB**=Black (L and LA only) **P**=White (L and LA only)	**277**=277V (Only with LA and L2G) **[Blank]**=120V	**HO**=High Output (WW Beam only)	**L850**=Solite Lens Kit **L8SP**=15° Spot Optic Kit **L8NF**=25° Narrow Flood Optic Kit **L8FL**=37° Flood Optic Kit **L8WW**=Wall Wash Optic Kit

NOTES: 1. Juno® T single circuit and 2-circuit track contact. Juno® is a registered trademark of Juno® Lighting. **2.** Lightolier® Lyfespan 6000 single circuit and 2 circuit track contact. Lightolier® is a registered trademark of Philips Lighting. **3.** Global® is a registered trademark of Nordic Aluminum.

DesignLights Consortium® Qualified. Refer to www.designlights.org Qualified Products List under Family Models for details.

Dimensions

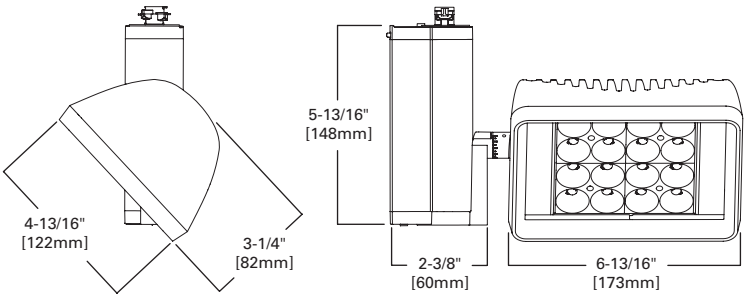

Photometry

High Output

CCT= 3000K

	0° Aiming Angle Horizontal Footcandles				30° Aiming Angle Horizontal Footcandles					30° Aiming Angle Vertical Footcandles on Wall				
	D	FC	L	W	D	FC	L	W	CB	D	FC	L	W	CB
Spot: 15°	5.0	1110	2.0	2.0	5.0	721	2.7	2.3	2.9	3.0	444	4.2	2.3	5.2
CBCP: 27,741	7.5	493	3.0	3.0	7.5	320	4.0	3.5	4.3	4.0	250	5.6	3.0	6.9
Lumens: 2399	10.0	277	4.0	4.0	10.0	180	5.4	4.7	5.8	5.0	160	7.0	3.8	8.7
LPW: 64.1	12.5	178	5.0	5.0	12.5	115	6.7	5.9	7.2	6.0	111	8.4	4.5	10.4
	15.0	123	5.9	5.9	15.0	80	8.1	7.0	8.7					
	D	FC	L	W	D	FC	L	W	CB	D	FC	L	W	CB
Narrow Flood: 25°	5.0	516	3.0	3.0	5.0	343	3.9	3.5	2.9	3.0	244	5.4	3.2	5.2
CBCP: 12,898	7.5	229	4.5	4.5	7.5	152	5.8	5.2	4.3	4.0	137	7.2	4.2	6.9
Lumens: 2383	10.0	129	5.9	5.9	10.0	86	7.7	6.9	5.8	5.0	88	9.0	5.3	8.7
LPW: 63.6	12.5	83	7.4	7.4	12.5	55	9.7	8.7	7.2	6.0	61	10.8	6.3	10.4
	15.0	57	8.9	8.9	15.0	38	11.6	10.4	8.7					
	D	FC	L	W	D	FC	L	W	CB	D	FC	L	W	CB
Flood: 37°	5.0	227	4.7	4.7	5.0	163	5.5	5.3	2.9	3.0	139	5.9	4.6	5.2
CBCP: 5,669	7.5	101	7.1	7.1	7.5	72	8.3	7.9	4.3	4.0	78	7.9	6.1	6.9
Lumens: 2,319	10.0	57	9.4	9.5	10.0	41	11.1	10.6	5.8	5.0	50	9.8	7.6	8.7
LPW: 62.0	12.5	36	11.8	11.9	12.5	26	13.9	13.2	7.2	6.0	35	11.8	9.2	10.4
	15.0	25	14.1	14.2	15.0	18	16.6	15.9	8.7					

Notes and Definitions
Beam spread is to 50% center beam candlepower (CBCP).
D= Distance in feet to floor or wall.
FC= Footcandles on floor or wall at center beam aiming location.
L= Effective Visual Beam length in feet (50% of maximum footcandle level)
W= Effective Visual Beam width in feet (50% of maximum footcandle level)
CB= Distance in feet across or down to center beam location

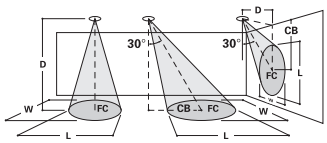

Wall Wash

High Output Wall Wash
Lumens: 2,052
LPW: 55.5

Single Fixture 3' From Wall
Distance From Fixture Along Wall

DD	0	1	2	3	4	5
1	93	67	35	12	2	1
2	83	57	32	14	3	2
3	53	39	24	12	3	2
4	32	25	17	10	4	2
5	19	16	12	8	4	3
6	12	10	8	6	3	3
7	7	7	6	5	3	2
8	5	5	4	4	4	2
9	4	3	3	3	2	2
10	3	3	2	2	2	2

Multiple Fixtures 3' From Wall
Spacing Between Fixtures

DD	4			5			6		
1	100	72	100	95	42	95	94	23	94
2	93	65	93	87	44	87	85	28	85
3	64	49	64	57	36	57	55	25	55
4	43	36	43	37	28	37	34	21	34
5	29	26	29	24	21	24	22	17	22
6	21	19	21	17	15	17	15	13	15
7	15	14	15	12	12	12	11	10	11
8	11	11	11	9	9	9	8	8	8
9	9	9	9	7	7	7	6	6	6
10	7	7	7	6	6	6	5	5	5

Notes
- Illuminance values for multiple fixtures are based upon the center two units of a four unit array. Footcandle values are centerline of fixtures and centered between fixtures.1 footcandle = 10.76 lux. 1 foot(') = 304.8mm.
- Illuminance values are cosine corrected initial value with no contribution from inter reflections from other room surfaces. Total illumination may increase from contributions from other surfaces.
- Changing fixture spacing will affect illuminance level.

$$\frac{\text{Existing Spacing}}{\text{New Spacing}} \times \text{Average Table Fc Level}$$

- 38W Multiplier = .5

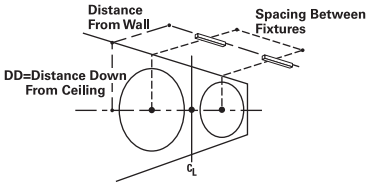

Stasis LED Small and Medium

The Stasis LED Small and Medium luminaire are perfect for those applications where performance is required from a discreet source. This fixture family can effortlessly replace traditional halogen and CMH light sources while yielding up to 85% energy and maintenance savings. Tight optical control provides superior light quality and precise aiming with minimal spill light. Stasis LED stands in a league all its own.

Features

- Three finishes: White, Matte Black, Aluminum Haze
- 3000K and 4000K color temperatures
- High 85 CRI
- Four optical distributions
  - Spot 9°
  - Wide Spot 15°
  - Narrow Flood 25°
  - Flood 40°
- ELV dimmable to 15%
- Easy installation yields simple retrofit opportunities with various connector options
- Superior light quality when compared to traditional light sources
- Five-year limited warranty

Ordering Information

Sample Number: L805MEDFL830P

Track	LED	Size	Beam	CRI	CCT	Finish	Voltage	Accessories
L=Halo and Lazer Power-Trac **LA**=Halo Architectural Track **LF**=Halo Architectural Flex Track **LJ**=Juno® Track[1] **LL**=Lightolier® Track[2] **L2G**=Global® TEK or HTEK[3]	**805**=805	**SML**=Small 8W **MED**=Medium 17W	**SP**=Spot 9° **WS**=Wide Spot 15° **NF**=Narrow Flood 25° **FL**=Flood 40°	**8**=85	**30**=3000K **40**=4000K	**AH**=Aluminum Haze **MB**=Black (L and LA only) **P**=White (L and LA only)	**277**=277V (Only with LA or HTEK) **[Blank]**=120V	**LM10530**=Media Holder

NOTES: 1. Juno® T single circuit and 2-circuit track contact. Juno® is a registered trademark of Juno® Lighting. **2.** Lightolier® Lyfespan 6000 single circuit and 2 circuit track contact. Lightolier® is a registered trademark of Philips Lighting. **3.** Global® is a registered trademark of Nordic Aluminum.

DesignLights Consortium® Qualified. Refer to www.designlights.org Qualified Products List under Family Models for details.

Dimensions

Small

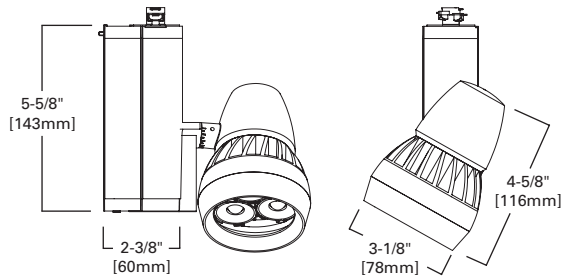

Medium

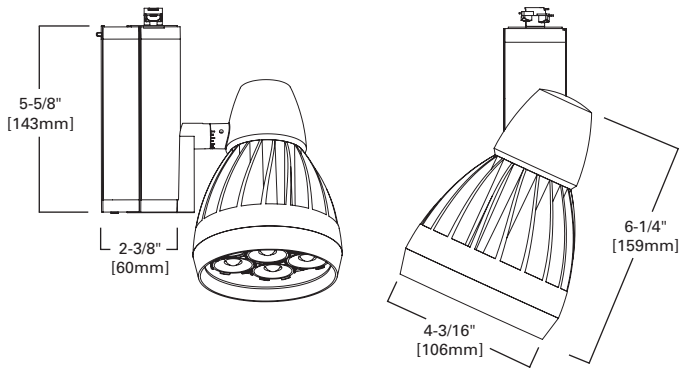

Photometry

Small

CCT= 3000K
4000K Multiplier= 1.25

0˚ Aiming Angle
Horizontal Footcandles

Spot: 9˚
CBCP: 14,627
Lumens: 436
LPW: 55.2

D	FC	L	W
5.0	585	0.8	0.8
7.5	260	1.1	1.1
10.0	146	1.5	1.5
12.5	94	1.9	1.9
15.0	65	2.3	2.3

Wide Spot: 15˚
CBCP: 5,238
Lumens: 449
LPW: 56.8

D	FC	L	W
5.0	210	1.4	1.4
7.5	93	2.1	2.1
10.0	52	2.8	2.8
12.5	34	3.5	3.5
15.0	23	4.2	4.2

Narrow Flood: 25˚
CBCP: 1,186
Lumens: 384
LPW: 46.3

D	FC	L	W
5.0	47	2.6	2.6
7.5	21	3.9	3.9
10.0	12	5.2	5.2
12.5	8	6.5	6.5
15.0	5	7.8	7.8

Flood: 40˚
CBCP: 1,044
Lumens: 391
LPW: 49.5

D	FC	L	W
5.0	42	2.9	2.9
7.5	19	4.4	4.4
10.0	10	5.8	5.8
12.5	7	7.3	7.3
15.0	5	8.8	8.8

Medium

CCT= 3000K
4000K Multiplier= 1.25

0˚ Aiming Angle
Horizontal Footcandles

Spot: 9˚
CBCP: 39,188
Lumens: 999
LPW: 58.1

D	FC	L	W
5.0	1568	0.7	0.7
7.5	697	1	1
10.0	392	1.4	1.4
12.5	251	1.7	1.7
15.0	174	2	2

Wide Spot: 15˚
CBCP: 14,251
Lumens: 994
LPW: 58.1

D	FC	L	W
5.0	570	1.3	1.3
7.5	253	2	2
10.0	143	2.7	2.7
12.5	91	3.3	3.3
15.0	63	4	4

Narrow Flood: 25˚
CBCP: 4,198
Lumens: 903
LPW: 51.6

D	FC	L	W
5.0	198	1.8	1.8
7.5	88	2.7	2.7
10.0	49	3.6	3.6
12.5	32	4.5	4.5
15.0	22	5.4	5.4

Flood: 40˚
CBCP: 2,350
Lumens: 921
LPW: 54.5

D	FC	L	W
5.0	42	2.9	2.9
7.5	19	4.4	4.4
10.0	10	5.8	5.8
12.5	7	7.3	7.3
15.0	5	8.8	8.8

Notes and Definitions
Beam spread is to 50% center beam candlepower (CBCP).
D= Distance in feet to floor or wall.
FC= Footcandles on floor or wall at center beam aiming location.
L= Effective Visual Beam length in feet (50% of maximum footcandle level)
W= Effective Visual Beam width in feet (50% of maximum footcandle level)
CB= Distance in feet across or down to center beam location

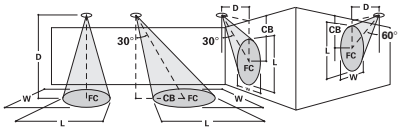

Track Systems

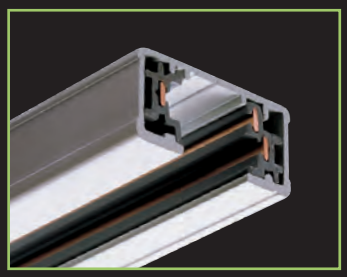

Miniature Track

Miniature track provides versatility for every lighting need.

Decorator finishes, push-in connectors and economy all combine to make single-circuit track perfect for residential or commercial use.

L650 2' Track - 20-1/8" (511mm).

L651 4' Track - 44-1/8" (1121mm).

L652 8' Track - 92-1/8" (2340mm).

L653 12' Track - 140-1/8" (3559mm).

Finishes: White (P), Black (MB), Silver (SL)

Size
11/16" (17.5mm) D by 1-3/8" (35mm) W

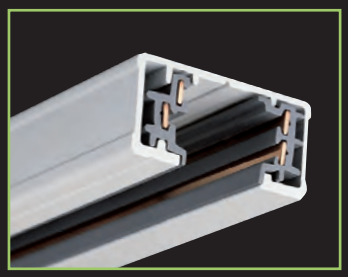

Halo-2 Power-Trac

Halo-2 Power-Trac has two circuits for greater system flexibility.

Halo-2 Power-Trac system provides two separate 20 AMP circuits. Each circuit can be independently switched. Suitable for commercial, merchandising and residential applications.

L641 4' Track - 42-5/8" (1083mm).

L642 8' Track - 90-5/8" (2302mm).

L643 12' Track - 138-5/8" (3521mm)

Finish: White (P), Black (MB), Silver (SL)

Size
11/16" (17.5mm) D by 1-3/8" (35mm) W

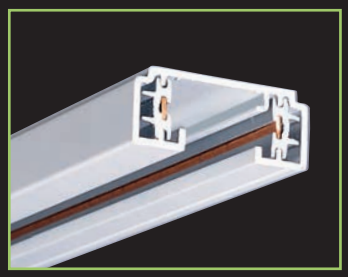

Lazer Track

Lazer track offers economy and convenience.

LZR102 2' Track - 20-1/8" (511mm).

LZR104 4' Track - 44-1/8" (1121mm).

LZR106 6' Track - 68-1/8" (1730mm).

LZR108 8' Track - 92-1/8" (2340mm).

Finishes: White (P), Black (MB)

The Lazer two-conductor track is available in two finishes and 4 lengths. The overall height is only 9/16" with a decorative reveal at the ceiling line.

Size
9/16" (14mm) D by 1-3/8" (35mm) W

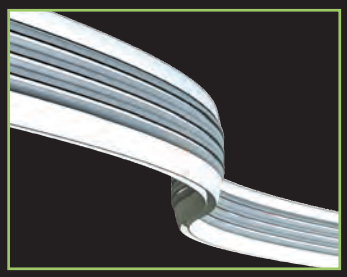

Halo Flexible Track

Halo flexible track is the ultimate in aesthetic, mechanical and electrical versatility.

LF4AH 4' Track

LF4AH 8' Track

Finish: Aluminum Haze (AH)

Halo flexible track is a three circuit, bendable track system. There are two 120V / 20A circuits with dedicated neutrals, as well as a third 12V / 25A circuit. The track can be used as either a stand-alone 120V or 12V system, or a combination of both. Each circuit can be independently switched. The system is suitable for a wide range of commercial, merchandising and residential applications.

Size
1-1/2" (39mm) H and 7/16" (12mm) W

See www.cooperlighting.com for compatible connectors.

Eaton's Cooper Lighting Business
Headquarters
1121 Highway 74 South
Peachtree City, GA 30269
P: 770-486-4800
www.cooperlighting.com

Canada Sales
5925 McLaughlin Road
Mississauga, Ontario L5R 1B8
P: 905-501-3000
F: 905-501-3172

Our Lighting Product Brands
Halo
Halo Commercial
Portfolio
IRiS
RSA
Metalux
Corelite
Neo-Ray
Fail-Safe
MWS
Ametrix
Shaper
io
Lumark
McGraw-Edison
Invue
Lumière
Streetworks
AtLite
Sure-Lites

Our Controls Product Brands
Greengate
iLumin
Zero 88
Fifth Light Technology
iLight (International Only)

FSC
www.fsc.org
MIX
Paper from responsible sources
FSC® C103525

Powering Business Worldwide

Eaton
1000 Eaton Boulevard
Cleveland, OH 44122
United States
Eaton.com

Eaton's Cooper Lighting Business
1121 Highway 74 South
Peachtree City, GA 30269
P: 770-486-4800
www.cooperlighting.com

© 2014 Eaton
All Rights Reserved

Printed in USA
Publication No. ADV131223
January 2014

Eaton is a registered trademark.

All other trademarks are property of their respective owners.

Loading Dock Lights

Chalfant Dock/Fan Lights provide an atmosphere for improved employee safety and efficiency – because employees are more comfortable, less fatigued from heat and forklift fumes, and have better visibility within the trailer.

High velocity, 18" Dock Fans generate a high CFM for effective air circulation.

- Motor: 1/8th HP, 2.0 amp
- 3-Speed, Self lubricating
- Safety grills front and rear
- Light-only switch (Incan. & HPS)
- Fans quickly removed if not in use

Manufactured to industrial standards:

- Double strut steel arms
- Powder coated safety yellow
- 52" Overall reach
- 14 Gauge, 1-1/2" Steel tubing
- Nylon & steel washers
- 3/16" Steel Mounting plate
- 18/3 SJT cordset with plug, 4-1/2'

All Chalfant dock fixtures are UL Listed and meet NEC and OSHA general safety requirements. The addition of a poly-carbonate lens to any of our HPS fixtures, makes them safe for food handling and processing areas.

DOUBLE STRUT - DL

Shown with Metal Head.

- Double strut mounting arm provides greater strength.
- 1-1/2 inch, 14 gauge square steel tubing.

Order Model	Arm Length	Head Type	Shipping Weight
DL-24	24"	Metal	13 lb.
DL-40	40"	Metal	16 lb.
DL-60	60"	Metal	20 lb.

DOUBLE STRUT - FANDL

- Double strut mounting arm provides greater strength.
- Three speed adjustable fan with 18 inch blades provides up to 4200 cubic feet per minute (cfm) at 2 feet.

Order Model	Arm Length	Head Type	Shipping Weight
FANDL-24	24"	Metal	32 lb.
FANDL-40	40"	Metal	35 lb.
FANDL-60	60"	Metal	39 lb.

"Quality Made, Built To Last"

11525 MADISON AVENUE
CLEVELAND, OH 44102-2325
TEL: 216-521-7922 FAX: 216-521-6854
VISIT US ON THE WEB: www.ChalfantUSA.com

Chalfant Sewing Fabricators, Inc. reserves the right to make design improvements without notice.

Economy High Bay Industrial Luminaire

e EC **Series**

Features

A Breakthrough Alternative to HID High-Bay Systems

Optimized to Deliver Good Performance and Low Cost

Powered by Brand Name Ballasts and Lamps

Stock Program for Fast Delivery

CEE Rated Components

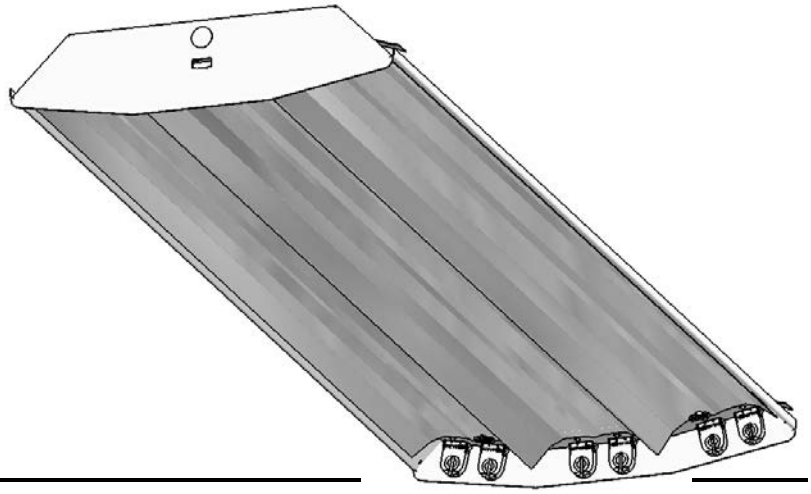

Technical Data

Housing: 22ga. (0.028") pre-painted steel die formed with sufficient knockouts for mounting and electrical supply.

Finish: All cold rolled steel parts are post-painted with a smooth, glossy, highly reflective white paint.

Reflector: Substrate is 0.016" high quality aluminum. The reflector profile is optimized using computer analysis and manufactured using state of the art CNC equipment. A protective premask is applied to all reflective surfaces prior to manufacture.

Construction: The solid fourteen-bend body provides added rigidity. The socket bars are securely bolted to the fixture body. The reflector attaches with quarter-turn fasteners. No tools are required for reflector installation and removal.

Mounting: Fixture is designed for surface or suspended applications

Installation

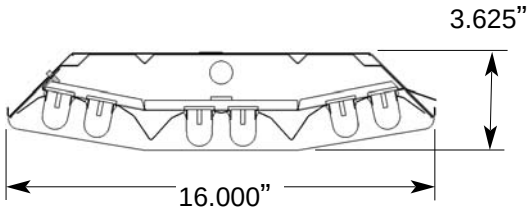

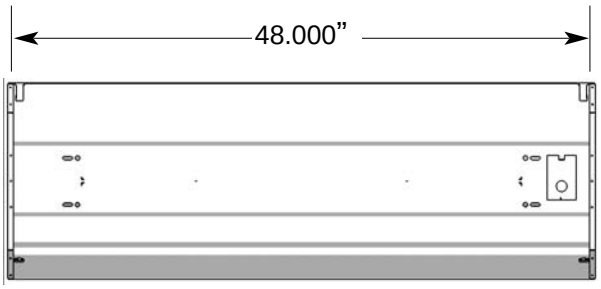

Highlights

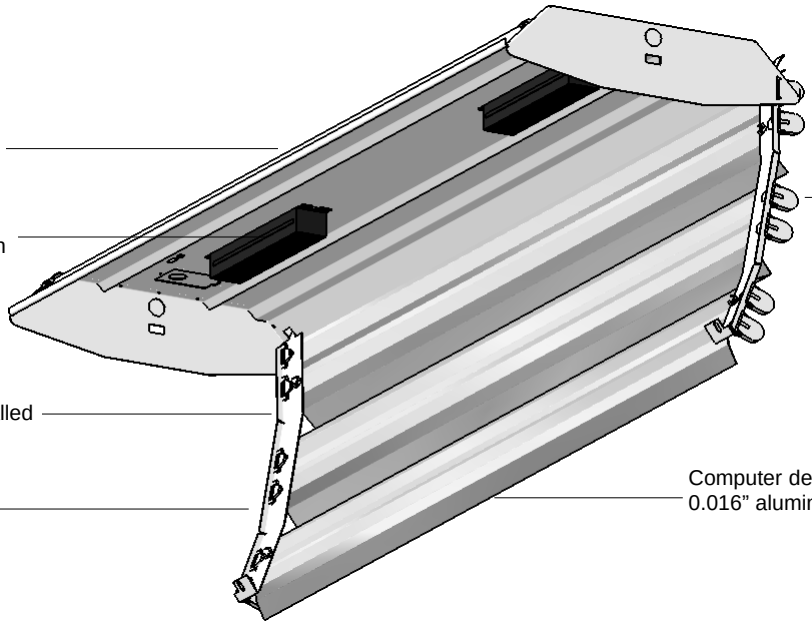

Photometrics

Energy Solutions
Premium Lighting without the Premium Price

Energy Solutions International, Inc.
1385 Mendota Heights Road
Saint Paul, MN 55120

.ENERGY SOLUTIONS 1 X 4 FLUORESCENT LUMINAIRE
WITH WHITE INTERIOR, SPECULAR REFLECTOR AND NO LENS

SIXT8 LINEAR FLUORESCENT 32 WATT LAMPS, LUMEN RATING 2900 LMS. TWO SYLVANIA QT332PLUS
BALLASTS OPERATING AT 277 VAC AND 226 WATTS

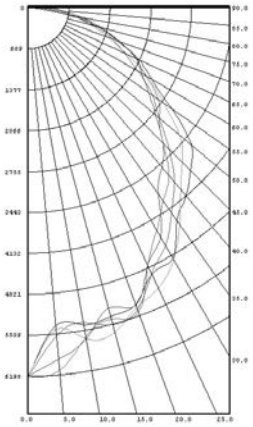

CANDLEPOWER SUMMARY

0.00	6198	6198	6198	6198	6198
5.00	5360	5429	5534	5935	6125
10.00	5421	5653	5380	5653	5622
15.00	5373	5648	5524	5229	5420
20.00	5303	5360	5393	5318	5447
25.00	4935	5205	4925	4759	4766
30.00	4874	4903	4635	4479	4344
35.00	4381	4455	4212	3831	3967
40.00	4143	4005	3832	3507	3700
45.00	3869	3678	3366	3224	3229
50.00	3599	3341	2892	2806	2894
55.00	2960	2795	2556	2466	2688
60.00	2393	2322	2135	2205	2282
65.00	2064	1822	1785	2005	1993
70.00	1600	1409	1475	1580	1619
75.00	1186	1076	1136	1235	1267
80.00	614	684	796	907	865
85.00	229	371	477	558	623
90.00	54.3	127	257	343	339

ZONAL LUMENS AND PERCENTAGES

Zone	Lumens	%Lamp	%Fixt
0- 30	4371	25.1	27.6
0- 40	6999	40.2	44.2
0- 60	12039	69.2	76.1
0- 90	15665	90.0	99.0
90-120	152	0.9	1.0
90-130	152	0.9	1.0
90-150	153	0.9	1.0
90-180	153	0.9	1.0
0-180	15817	90.9	100.0

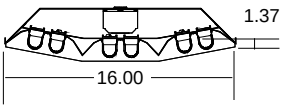

** EFFICIENCY = 90.9% **

LUMINANCE SUMMARY - CD./SQ.M.

	0	45	90
0	12767.94	12767.94	12767.94
45	10546.90	8188.18	7769.57
50	10659.05	7501.42	7412.07
55	9681.31	7160.32	7420.46
60	8810.10	6553.61	6887.03
65	8768.26	6110.76	6690.02
70	8102.81	5758.49	6175.85
75	7512.52	5202.16	5646.20
80	5241.35	4451.31	4674.21
85	3026.37	3462.50	4318.90

PAINT REFLECTANCE = 0.78 S/MH = 1.17
SC (ALONG) = 1.17 SC (ACROSS) = 1.06
PREPARED IN PHOTOPIA FOR
ENERGY SOLUTIONS
ST. PAUL, MN

Ordering Information

Part Number = Fixture Size + Reflector Material + # Lamps + Lamp Wattage + Voltage + Ballast Type + Options

(Example E-14ECEA632UNVH-850-8C4 = 1'x4' Economy Eco-Brite with an enhanced reflector, 6-32W lamps, HP ballasts, 850 Series Lamps and an 8' L7 cord)

Base Fixture

E-14ECEA632UNV - 1' x 4' EC, Enhanced Refl, 6-32W T8, UNV Voltage

Cord Option

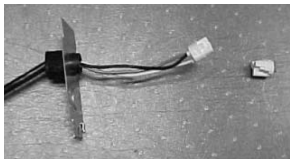

* This option includes a plug disconnect within the fixture. This allows simple, tool free replacement of the fixture if necessary.

Options

N - Normal Power Ballast

H - High Power Ballast

Lamps

850 - 850 Series Installed

Cord*

8C1 - 8' 120V 15A Three Prong

8C2 - 8' 120V 15A Twist-lock

8C3 - 8' 240V 15A Twist-lock

8C4 - 8' 277V 15A Twist-lock

8C8 - 8' Whip - no plug

8C9 - 8' Metal Cable - no plug

CEILING WALL MOUNT LIGHT

356-2040
12/10

QUESTIONS OR CONCERNS CONTACT CANARM AT:
1-800-265-1833 (English) 1-800-567-2513 (French)
Monday through Friday 8:00 AM to 5:00 PM E.S.T.
or email to: guestservice@canarm.ca

TOOLS AND MATERIALS REQUIRED:

Pliers

Wire Cutters

Wiring supplies as required by electrical code

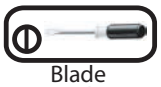
Blade Screwdriver

Phillips Screwdriver

"INSTRUCTIONS PERTAINING TO RISK OF FIRE OR INJURY TO PERSONS"
"READ ALL INSTRUCTIONS"

"IMPORTANT SAFETY INSTRUCTIONS"
"SAVE THESE INSTRUCTIONS"

ATTENTION: BRANCH CIRCUIT CONDUCTORS MUST BE RATED 90 °C CONSULT A QUALIFIED ELECTRICIAN BEFORE INSTALLING.

SAFETY PRECAUTIONS:

1. **TURN OFF ELECTRICAL POWER BEFORE STARTING INSTALLATION OF LIGHT FIXTURE.**
2. **THIS PRODUCT MUST BE INSTALLED IN ACCORDANCE WITH THE APPLICABLE INSTALLATION CODE BY A PERSON FAMILIAR WITH THE CONSTRUCTION AND OPERATION OF THE PRODUCT AND THE HAZARDS INVOLVED.**
3. **CONNECT THE GROUND WIRE (BARE COPPER OR GREEN) FROM YOUR FIXTURE TO THE GROUND WIRE (BARE COPPER OR GREEN) OR GROUND SCREW IN THE ELECTRICAL OUTLET BOX OR CONNECT THE GROUND WIRE FROM THE ELECTRICAL OUTLET BOX TO THE GROUND SCREW ON THE OUTLET BOX COVER OF THE FIXTURE.**
4. **FIXTURE SHOULD NOT BE MOUNTED TO A 4" X 4" SQUARE ELECTRICAL OUTLET BOX OR ANY OTHER BOX RESULTING IN OPENINGS INTO THE WIRING COMPARTMENT.**

NOTE: Product May Not Look Exactly As Shown In Diagrams. Bulbs Are Not Included.

INSTALLATION:

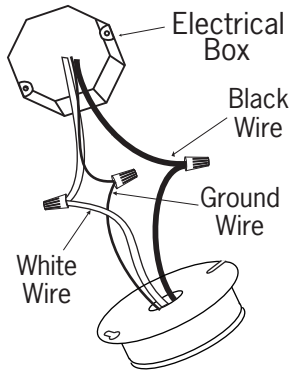

1. Connect the ground wire (bare copper or green) from your fixture to the ground wire (bare copper or green) or ground screw in the electrical outlet box. Connect white power lead(s) from light fixture to white wire in outlet box. Connect black wire(s) from light fixture to black wire in outlet box.

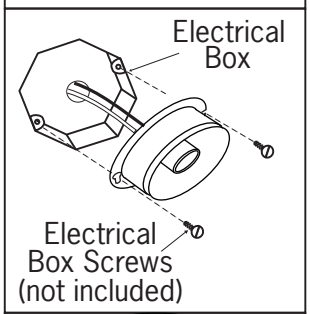

2. Once connections of wires are completed, carefully tuck wires and wire nuts into the outlet box making sure no bare wire (on the black and white) is visible at the wire nuts. Tighten the outlet box cover to the electrical box using the electrical box screws (not included).

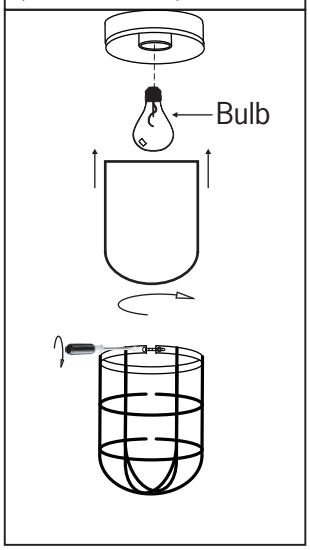

3. Unscrew glass cylinder to install specified bulb (sold separately). Screw glass cylinder back on to the fixture.

Imported By: CANARM LTD., 2157 Parkedale Ave., Brockville, Ontario, K6V 5V6, Tel: (613) 342-5424, Fax: (613) 342-8437

GE Consumer & Industrial
Lighting

F32T8 High Lumen

Are You Evaluating Your Fixture Layouts?
Considering Reducing Fixture Count or
Reducing Lamps per Fixture?

Replace Your 32 Watt T8 Lamps with F32T8/High Lumen Lamps

Imagine Energy and Ecolux® at work in one family of fluorescent lamps.

32 Watt (High Lumen); 4' Fluorescent; Highly Energy Efficient

Extra Long Life; 29,000 hours @ 12 hours/start

TCLP-Compliant

High Quality Color Rendering;
85 (SPX30); 85 (SPX35); 82 (SPX41);
80 (SPX50)

F32T8/XL/SPX/HL/ECO Long 29,000 Hour Life @ 12 hours / start; Extends Relamp Cycle

Increase your light output or reduce energy consumption by using F32T8 High Lumen instead of Standard F32T8 lamps. (Ex: 4-Lamp T8 Fixture)

Ballast Factor		# of Lamps	Watts	Initial Rated Lamp Lumens	Calculated System Watts	Calculated System Lumens
0.87	F32T8/SP35/XL/ECO	4	32	2800	111	9744
0.87	F32T8/XL/SPX/HL/ECO	3	32	3100	84	8091
1.15	F32T8/XL/SPX/HL/ECO	3	32	3100	111	10695
-OR-		25% Energy Decrease per Fixture				
0.87	F32T8/SP35/XL/ECO	4	32	2800	111	9744
0.87	F32T8/XL/SPX/HL/ECO	4	32	3100	111	10788
1.15	F32T8/XL/SPX/HL/ECO	3	32	3100	111	10695

Use the 10% HIGHER lumens to de-lamp or de-fixture the facility

imagination at work

F32T8 High Lumen Lamp Specifications

Product Description	F32T8/XL/SPX30/HL/ECO	F32T8/XL/SPX35/HL/ECO	F32T8/XL/SPX41/HL/ECO	F32T8/XL/SPX50/HL/ECO
Product Code	10327	10326	10322	42556
Case Quantity	36	36	36	36
Physical Characteristics				
Bulb Designation	T8	T8	T8	T8
Bulb Material	Soda Lime	Soda Lime	Soda Lime	Soda Lime
Max Bulb Diameter (D)	1.10" (27.9mm)	1.10" (27.9mm)	1.10" (27.9mm)	1.10" (27.9mm)
Nominal Bulb Diameter (D)	1" (25.4mm)	1" (25.4mm)	1" (25.4mm)	1" (25.4mm)
Base Type	Medium Bipin (G13)	Medium Bipin (G13)	Medium Bipin (G13)	Medium Bipin (G13)
Max Face to End of Opposing Pin (B)	47.50" (1206.5mm)	47.50" (1206.5mm)	47.50" (1206.5mm)	47.50" (1206.5mm)
Min Face to End of Opposing Pin (B)	47.40" (1204.0mm)	47.40" (1204.0mm)	47.40" (1204.0mm)	47.40" (1204.0mm)
Max Overall Length (C)	47.78" (1213.6)	47.78" (1213.6)	47.78" (1213.6)	47.78" (1213.6)
Nominal Overall Length (C)	48"	48"	48"	48"
TCLP Compliant	yes	yes	yes	yes
Low Mercury	yes	yes	yes	yes
Electrical Characteristics				
Nominal Lamp Watts (W)	32	32	32	32
Nominal Lamp Voltage (V)	137	137	137	137
Min. Term to Term Starting Voltage - RS	315	315	315	315
Nominal Lamp Operating Frequency (Hz)	50-60Hz	50-60Hz	50-60Hz	50-60Hz
Min Cathode Resistance (Rh/Rc)	4.25	4.25	4.25	4.25
Max Cathode Resistance (Rh/Rc)	6.5	6.5	6.5	6.5
Minimum Starting Temp (°F)	50	50	50	50
Photometric Characteristics				
Reference - Initial Lumens	3100	3100	3100	3000
- Mean Lumens (40% rated life)	2915	2915	2915	2820
Nominal Efficacy (Lumens/Watt)	97	97	97	94
Rated Life (hrs) 3 hr cycle - IS ballast	24000	24000	24000	24000
Rated Life (hrs) 3 hr cycle - RS ballast	24000	24000	24000	24000
Rated Life (hrs) 12 hr cycle - IS ballast	30000	30000	30000	30000
Color Rendering Index (Ra) CRI	85	85	82	80
Correlated Color Temperature (Kelvin)	3000	3500	4100	5000

Fluorescent Lamp Spectra F32T8 HL colors – SPX30 HL

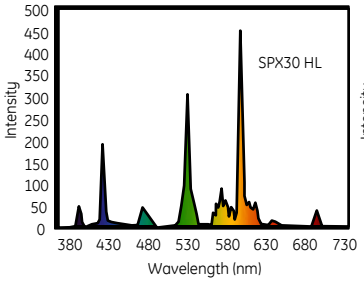

Fluorescent Lamp Spectra F32T8 HL colors – SPX35 HL

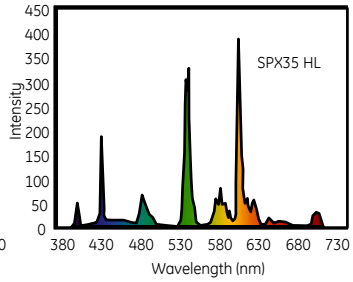

Fluorescent Lamp Spectra F32T8 HL colors – SPX41 HL

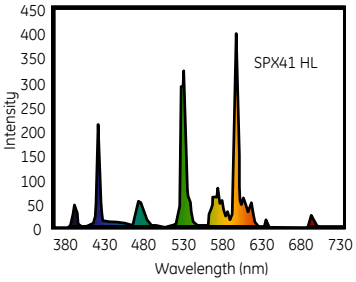

Fluorescent Lamp Spectra F32T8 HL colors – SPX50 HL

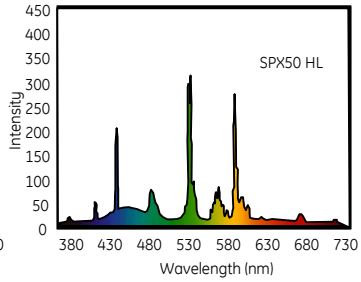

Lamp Mortality

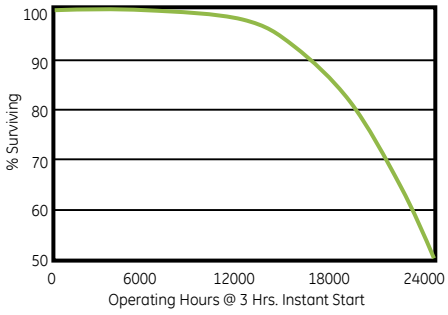

Lumen Maintenance

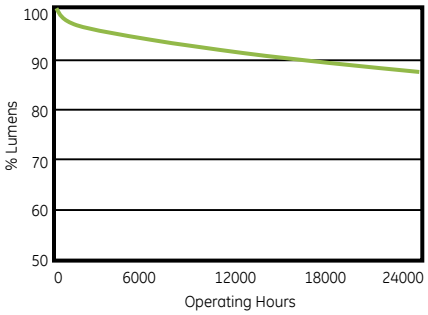

F32T8/XL/HL (32W) Specifier Statement:

Lamps shall be GE Starcoat® T8 High Lumen lamps having medium bi-pin bases. F32T8/XL/HL lamps shall be designed to pass the Federal TCLP test in force at the time of manufacture. F32T8/XL/HL rated life shall be at least 24,000 hr at 3 hours per start on a T8 instant start ballast. F32T8/XL/HL lamps shall have initial lumens of at least 3100 (3000 for 5000K) and mean lumens of at least 2915 (2820 for 5000K), and a color rendering index of at least 80 for the 5000K, 82 for the 4100K lamp, 85 for the 3500K and 3000K. F32T8/XL/HL lamps shall have a nominal wattage of 32 watts.

For additional product and application information, please consult GE's Website: www.gelighting.com

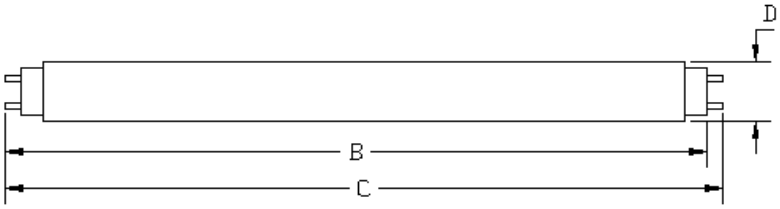

28337-12/2005 Printed in USA

System Performance Comparison Matrix

Compare the overall performance of a GE UltraMax™ system to conventional lamp and ballast systems.

Lamps	Electromagnetic Ballasts	Electronic Ballasts					
2-Lamp System Performance 4' Fluorescent							
	Electromagnetic E.S.	Rapid Start	Low Power (L)	Normal	UltraMax L	UltraMax N	UltraMax H
Watt-Miser T12 (CW)	Watts: 74 BF: 0.90 Light: 100% RLPW: 100%	Watts: 64 BF: 0.86 Light: 96% RLPW: 110%	Not Available	Not Available	Not Available	Not Available	Not Available
F32T8 & F32T8/XL (SP)	Watts: 69 BF: 0.88 Light: 116% RLPW: 125%	Watts: 63 BF: 0.88 Light: 116% RLPW: 137%	Watts: 51 BF: 0.78 Light: 103% RLPW: 149%	Watts: 58 BF: 0.88 Light: 116% RLPW: 148%	Watts: 48 BF: 0.77 Light: 102% RLPW: 157%	Watts: 53 BF: 0.87 Light: 115% RLPW: 160%	Watts: 73 BF: 1.15 Light: 152% RLPW: 154%
F32T8/WM ULTRA & XL (SP)	Not Recommended	Not Recommended	Watts: 48 BF: 0.78 Light: 102% RLPW: 157%	Watts: 54 BF: 0.88 Light: 115% RLPW: 157%	Watts: 46 BF: 0.77 Light: 100% RLPW: 161%	Watts: 52 BF: 0.87 Light: 113% RLPW: 161%	Watts: 70 BF: 1.15 Light: 150% RLPW: 158%
3-Lamp System Performance 4' Fluorescent							
	Electromagnetic E.S.	Rapid Start	Low Power (L)	Normal	UltraMax L	UltraMax N	UltraMax H
Watt-Miser T12 (CW)	Watts: 117 BF: 0.91 Light: 100% RLPW: 100%	Watts: 93 BF: 0.86 Light: 95% RLPW: 119%	Not Available	Not Available	Not Available	Not Available	Not Available
F32T8 & F32T8/XL (SP)	Watts: 105 BF: 0.88 Light: 115% RLPW: 128%	Watts: 93 BF: 0.88 Light: 115% RLPW: 145%	Watts: 77 BF: 0.78 Light: 102% RLPW: 155%	Watts: 87 BF: 0.88 Light: 115% RLPW: 155%	Watts: 72 BF: 0.77 Light: 101% RLPW: 163%	Watts: 80 BF: 0.87 Light: 114% RLPW: 166%	Watts: 109 BF: 1.15 Light: 150% RLPW: 161%
F32T8/WM ULTRA & XL (SP)	Not Recommended	Not Recommended	Watts: 72 BF: 0.78 Light: 101% RLPW: 163%	Watts: 81 BF: 0.88 Light: 113% RLPW: 164%	Watts: 68 BF: 0.77 Light: 99% RLPW: 171%	Watts: 77 BF: 0.87 Light: 112% RLPW: 170%	Watts: 104 BF: 1.15 Light: 148% RLPW: 167%
4-Lamp System Performance 4' Fluorescent							
	Electromagnetic E.S.	Rapid Start	Low Power (L)	Normal	UltraMax L	UltraMax N	UltraMax H
Watt-Miser T12 (CW)	Watts: 148 BF: 0.90 Light: 100% RLPW: 100%	Watts: 128 BF: 0.86 Light: 96% RLPW: 110%	Not Available	Not Available	Not Available	Not Available	Not Available
F32T8 & F32T8/XL (SP)	Watts: 138 BF: 0.88 Light: 116% RLPW: 125%	Watts: 120 BF: 0.88 Light: 116% RLPW: 143%	Watts: 100 BF: 0.78 Light: 103% RLPW: 152%	Watts: 114 BF: 0.88 Light: 116% RLPW: 151%	Watts: 96 BF: 0.77 Light: 102% RLPW: 158%	Watts: 107 BF: 0.87 Light: 115% RLPW: 159%	TBD
F32T8/WM ULTRA & XL (SP)	Not Recommended	Not Recommended	Watts: 95 BF: 0.78 Light: 102% RLPW: 158%	Watts: 107 BF: 0.88 Light: 115% RLPW: 159%	Watts: 91 BF: 0.77 Light: 100% RLPW: 163%	Watts: 103 BF: 0.87 Light: 113% RLPW: 163%	TBD

Notes:
Light refers to "mean" lumen output relative to highlighted T12 Electromagnetic E.S. (energy saving) ballast systems.
RLPW is mean system Lumens/Watt relative to highlighted T12 Electromagnetic E.S. (energy saving) ballast systems.
Watts shown at 277 volts.

transforming the power of light™

Ordering Guide and System Wattage

There's a combination of GE UltraMax™ ballasts and T8 lamps that can make virtually any lighting system perform better. The chart below lets you see for yourself.

Starting	Ballast Factor	# Lamps	GE UltraMax Ballasts			F32T8 Input Watts			F32T8/WM Input Watts			F28T8/UMX Input Watts †	Units Per Case
			Product Code	Description	Input Voltage	Input Watts†	In Fixture△ Open	In Fixture△ Enclosed	Input Watts†	In Fixture△ Open	In Fixture△ Enclosed		
Instant Start	Low	1	49706	GE-132-MAX-L/Ultra	Multi-Volt 120	25	24	24	24	23	23	22	10
					277	25	24	24	24	23	23	22	
		2	49707	GE-232-MAX-L/Ultra	Multi-Volt 120	48	48	47	46	46	45	44	10
					277	48	48	47	46	46	45	44	
		3	49708	GE-332-MAX-L/Ultra	Multi-Volt 120	73	72	71	69	68	67	65	10
					277	72	71	70	68	67	66	65	
		4	49709	GE-432-MAX-L/Ultra	Multi-Volt 120	97	95	93	92	90	88	87	10
					277	96	93	92	91	89	87	86	
	Normal	1	49771	GE-132-MAX-N/Ultra	Multi-Volt 120	28	28	27	27	26	26	25	10
					277	28	28	27	27	26	26	25	
		2	49772	GE-232-MAX-N/Ultra	Multi-Volt 120	54	54	53	53	52	51	49	10
					277	53	53	52	52	51	50	48	
		3	49773	GE-332-MAX-N/Ultra	Multi-Volt 120	82	80	78	78	77	74	72	10
					277	80	78	77	77	75	73	71	
		4	49774	GE-432-MAX-N/Ultra	Multi-Volt 120	109	105	103	105	101	98	98	10
					277	107	103	101	103	99	97	96	
	High	2	49775	GE-232-MAX-H/Ultra	Multi-Volt 120	74	71	69	71	69	67	66	10
					277	73	70	68	70	68	66	65	
		3	49776	GE-332-MAX-H/Ultra	Multi-Volt 120	111	105	102	106	102	97	97	10
					277	109	103	100	104	100	96	96	
		4	49777	GE-432-MAX-H/Ultra*	Multi-Volt 120	148	TBD	TBD	144	TBD	TBD	135	10
					277	145	TBD	TBD	141	TBD	TBD	132	
			GE UltraMax Ballasts			F96T8 Input Watts			F96T8/WM Input Watts				Units Per Case
			Product Code	Description	Input Voltage	Input Watts†	In Fixture△ Open	In Fixture△ Enclosed	Input Watts†	In Fixture△ Open	In Fixture△ Enclosed		
	Normal	1	49766	GE-159-MAX-N/Ultra	Multi-Volt 120	54	TBD	TBD	51	TBD	TBD		10
					277	53	TBD	TBD	51	TBD	TBD		
		2	49767	GE-259-MAX-N/Ultra	Multi-Volt 120	107	TBD	TBD	102	TBD	TBD		10
					277	105	TBD	TBD	100	TBD	TBD		

† Denotes standard laboratory non-fixture open bench testing.
△ In fixture watts represent typical field operating conditions with ballast and lamps in fixture/luminaire. Open fixture denotes non-lensed fixture/luminaire. Enclosed fixture denotes lensed fixture/luminaire.
* The UltraMax 4H ballast operates at the following Ballast Factors: 1.17 on F32T8; 1.18 on F32T8/WM; and 1.20 on F28T8/UMX.

For more information, visit www.gelighting.com.

GE Lighting

TRANSFORMING THE POWER OF LIGHT™

GE Lighting Web Center
GE is taking the lead in developing innovative uses of e-business technology to provide to you product and application information that can help you achieve your business goals. From interactive catalogs that deliver lamp and system performance information to Design Wizards that help in lamp and ballast selection and application, GELighting.com is the lighting site you will want to visit frequently.

www.GELighting.com

16233 (12/03) Printed in the USA

ULTRAMAX™ ELECTRONIC BALLASTS

Take Energy Savings to the MAX with NEW F28T8/UMX Systems

GE Lighting

TRANSFORMING THE POWER OF LIGHT™

BREAKTHROUGH TECHNOLOGY THAT DRAMATICALLY IMPROVES EFFICIENCY, SIMPLIFIES INSTALLATION AND DELIVERS OPTIMAL LAMP PERFORMANCE.

ULTRAMAX ELECTRONIC BALLAST

The right ballast. The right performance. The right light.

GE revolutionizes lighting again with new, breakthrough technology.

In the GE labs, our engineers have developed a new breed of ballasts to make lighting systems that save more energy, are more adaptable, and deliver optimal lamp performance. The innovative, patented technology in our new UltraMax™ electronic ballasts exceeds expectations, and is like nothing else available.

There's more to ULTRA MAX
- M: Multi-Voltage Control
- A: Arc-Guard Protection
- X: Xtreme Efficiency

Multi-Voltage technology means a single UltraMax™ model handles voltage from 120 through 277.

UltraMax™ Ballasts can virtually "read" the incoming voltage and adapt automatically to any voltage from 108V to 305V. The benefits of Multi-Voltage Control (MVC) are obvious:

- Fewer models handle more jobs, eliminating inventory hassles.
- MVC simplifies installation and eliminates guesswork at the job site.
- MVC compensates for incoming voltage fluctuations or variations from unreliable power.

MVC Multi-Voltage Control

One patented GE ballast handles 120V to 277V

UltraMax is the only full line of T8 ballasts with a UL Type CC Anti-Arc Rating.

UL Type CC Rating is a stringent designation of protection against arcing in electrical devices. GE's Arc-Guard design eliminates the damaging effects arcing can have on lamps, ballasts and sockets.

High efficiency delivers over 40% energy savings.

Ballasts are the new frontier of energy efficiency. Systems combining UltraMax™ electronic ballasts and T8/WM lamps can deliver over 40% energy savings over standard electromagnetically ballasted T12 systems. Since energy costs are typically 80% of the overall cost of light, a more efficient system can pay for itself in a very short time and provide an excellent return on investment.

UltraMax is ultra lamp friendly.

With an industry low lamp current crest factor (LCCF) of 1.4, UltraMax ensures optimal lamp operation and maximum lamp life, which can save on lamp and maintenance costs.

COMPARE THE ENERGY USE OF A THREE LAMP FIXTURE

1. STANDARD T12/WM SYSTEM
2. STANDARD ELECTRONIC T8 SYSTEM
3. GE ULTRAMAX L SYSTEM WITH F28T8/UMX LAMPS

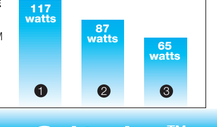

Active Current Regulation (ACR) technology is a patented advantage.

UltraMax's patented ACR modular design means individual inverter modules regulate the output current to each lamp. So, unlike conventional ballasts, if one lamp fails, the remaining lamps are not forced to operate at a higher current. This ensures optimal lamp performance.

Anti-Striation Control for better light quality, with no striations.

UltraMax is the only line of T8 ballasts with Anti-Striation Control. This advanced technology eliminates the maintenance issues caused by striating lamps, often referred to as spiraling or swirling. This provides a flicker- and worry-free environment.

Fully parallel independent lamp operation makes system easier to maintain.

If one lamp fails, all the others in the system stay lit. That means system maintenance is easier to manage.

UltraMax is ultra-cool.

UltraMax's high efficiency design results in ultra-cool operation that can provide additional AC energy savings, especially during peak demand periods.

A big idea in a small package.

The UltraMax™ housing is smaller, lower-profile and lightweight. That can be a big help in retrofits. It also means future fixture designs can be more compact and streamlined.

Every unit is tested and proven before it's shipped.

GE does 100% burn-in on every UltraMax™ ballast using our extreme open/short test, which simulates undesirable and harsh-use situations, so you are assured of a system you can rely on right out of the box.

GE Six Sigma quality backed by a full 5-year ballast warranty.

UltraMax ballasts are designed by GE's expert engineers and custom-manufactured to our exacting Six Sigma specifications, all backed by a full 5-year warranty. And, when used with GE T8 lamps you get our Total Performance System™ warranty, covering lamps with our 3-year limited warranty and ballasts with our 5-year warranty. Contact your GE representative for details.

SIX SIGMA QUALITY

A FULL FAMILY OF HIGH EFFICIENCY MULTI-VOLTAGE BALLASTS FOR ALL T8 APPLICATIONS.

ULTRAMAX ELECTRONIC BALLAST **L**

The Low watt option for Max energy savings. With a ballast factor of .77, the L line is the most energy efficient choice. It provides adequate illumination for most applications. For 1, 2, 3, and 4 T8 lamps in 2', 3', and 4' lengths.

ULTRAMAX ELECTRONIC BALLAST **N**

The Normal light option balances efficiency and illumination. The most-used type of ballast, the N line saves energy without sacrificing lumens. A ballast factor of .87 meets most application needs. For 1, 2, 3, and 4 T8 lamps in 2', 3', 4', and 8' lengths.

ULTRAMAX ELECTRONIC BALLAST **H**

The choice for High light output. With a ballast factor of 1.15, UltraMax™ H delivers the most lumens for maximum light or when you want more savings using fewer lamps. This is the first high-efficiency high-light output line for 2, 3 **and 4** T8 lamps.

13 UltraMax L, N and H models can replace more than 40 conventional electronic ballasts.

ACTUAL SIZE

See for yourself how different UltraMax™ ballasts perform.

	BALLAST FACTOR	*SYSTEM LUMENS (2850 Lumens/Lamp)	*INPUT WATTS	LUMENS PER WATT
L	.77	4389	48	91
N	.87	4959	53	94
H	1.15	6555	73	90

* For a 2-Lamp F32T8 System at 277V

Safety
- No PCBs
- UL Listed
  - Class P, Type 1
  - Type CC
  - Type HL (Hazardous Location)

Application Information
- Minimum Starting Temperature: 0°F, -18°C
- Maximum Ambient Temperature: 105°F, 40°C
- Sound Rated A
- Remote Mounting: 18' maximum lead length, 18 AWG
- High Frequency Lamp Operation: Above 60 kHz

Physical Parameters
(Except for the 4H model)
Length: 9.50 in.
Width: 1.70 in.
Height: 1.2 in.
Weight: 1.4 lbs.

4H Model Parameters
Length: 9.50 in.
Width: 2.30 in.
Height: 1.60 in.
Weight: 2.16 lbs.

Applications:

Offices	Plants
Retail	Hotels
Schools	Warehouses
Universities	Hospitals

PS1

6" Recessed Housing

For new construction, Thermally protected, Air Seal, IC or non-IC rated recessed housing. Thomas Pro Series housings are suitable for use with all Thomas 6" trims for non-IC applications up to 150 watts, and IC applications up to 90 watts.

Additional information

SKU	PS1
Height	7 1/2"
Length	6 1/2"
Depth	10 1/2"
Number of Lights	1 x 150W
Illumination Source	Incandescent
Location	Indoor
Recessed Size	6"

©2011 Thomas Lighting
1600 Fleetwood Drive | Elgin, IL 60123 | 800.825.5844

MENEHBUS-TES-CC-210W

EL INDUCTION

ST. CLAIR ACRYLIC HIGH BAY

EVERLAVST® INDUCTION HIGH-BAY LIGHTING FIXTURE

MANUFACTURED IN THE U. S. A.

Protected by U.S. Patent No. D659,897 4,839,781

SERIES: MENEHBUS-TES-CC210w

10 YEAR WARRANTY

DESCRIPTION:
- Series: MENEHBUS-TES-CC-210w
- Lamp Life Rating: 100,000 hours
- Proprietary lumen maintenance technology
- Light Output: 5000K, 82-90 CRI
- IP Rating: IP43

APPLICATIONS
- Warehouses
- Factories
- Retail Showrooms
- Gymnasiums
- Supermarkets
- Exhibition Halls

SPECIFICATIONS & PATENTED FEATURES
- Premium grade acrylic relfector with <2% Haze
- Conical lens lifts main beam and breaks diffuse image
- Stainless steel roll-form clamp band
- US Patented optics improve performance by 20% compared to competing fixtures
- Die cast aluminum ballast casing with corrosion-resistant white powder coat finish
- Electronic ballast with high power factor, flicker free instant re-strike
- Excellent vibration & shock resistance

ORDERING INFORMATION

SERIES

MENEHBUS-TES-CC210W — [ ] — [ ] — [ ] — [ ] — [ ] — [ ]

WATTAGE
- **210w** *210 WATT*

VOLTAGE
- **120** *120-277VAC*

COLOR TEMP
- **50** *5000K*
- **40*** *4000K*

CORD OPTIONS
- **X** *NONE*
- **L7*** *NEMA L7-15 277V*
- **L5*** *NEMA L5-15 120V*
- **L7-CW*** *L7-15 9FT WHITE CORD / BLACK PLUG*
- **L5-CW*** *L5-15 9FT WHITE CORD / BLACK PLUG*

WIRE GAURD
- **X** *NONE*
- **WG*** *WIRE GAURD*

DIMMING
- **X** *NONE*
- **VD*** *VARIABLE DIMMING*

MENARDS: **MENEHBUS-**TES-CC-210w-L7-X-X

BOLD = *STANDARD*
GREY * = *UPGRADE OPTIONS AVAILABLE UPON REQUEST*

© 2015 EVERLAST® LIGHTING, LLC. ALL RIGHTS RESERVED. PUBLISHED BY EVERLAST® LIGHTING, 2021 WELLWORTH AVENUE, JACKSON, MICHIGAN 49203.

REPRODUCTION IN PART OR WHOLE OF THIS DOCUMENT IN ANY COMMERCIAL USES INCLUDING PUBLICATION, BROADCASTING OR REDISTRIBUTION IN ANY MEDIUM WITHOUT THE PRIOR WRITTEN PERMISSION OF THE PUBLISHER IS PROHIBITED. 04-15

DIMENSIONS

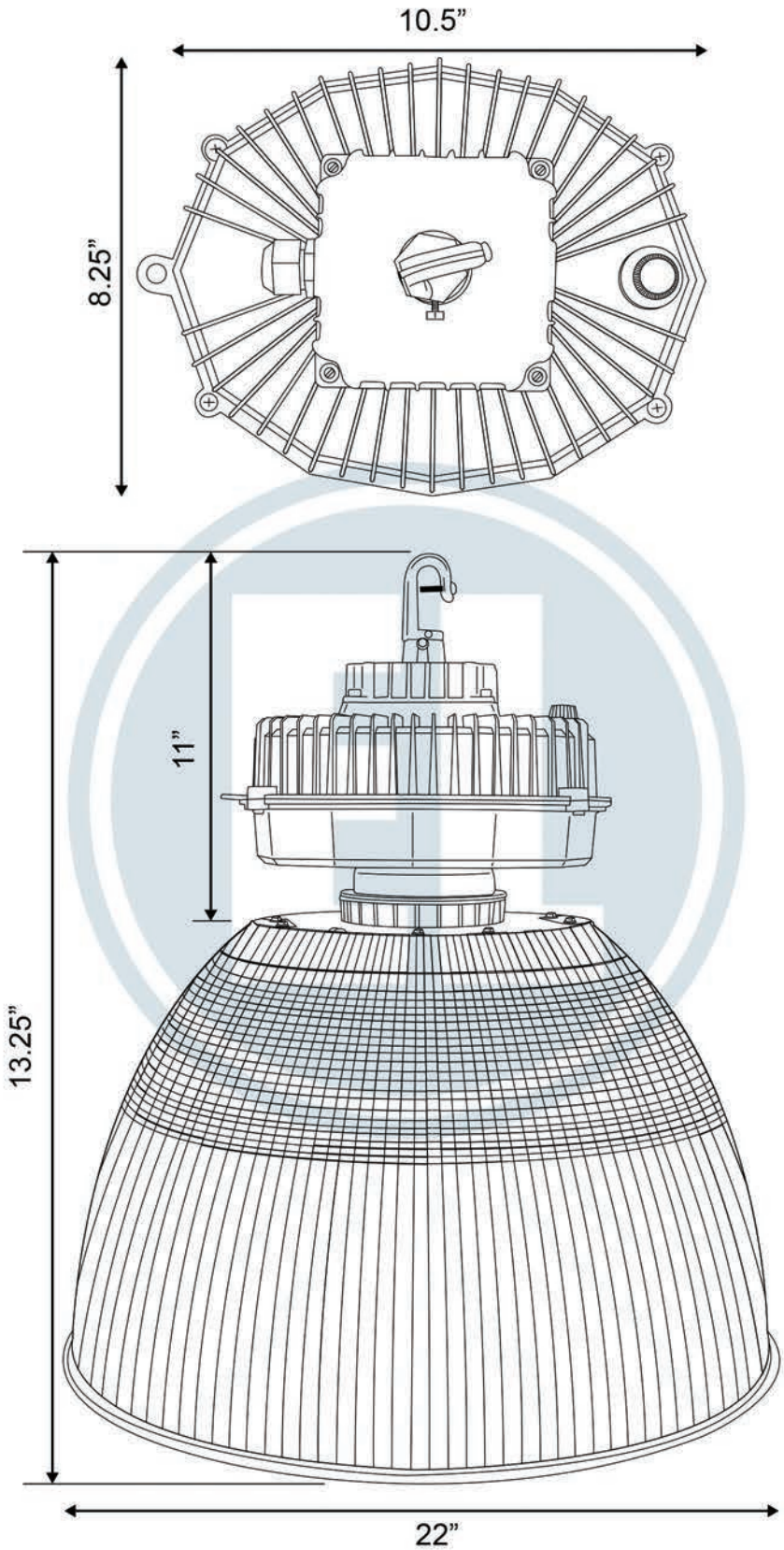

© 2015 EVERLAST® LIGHTING, LLC. ALL RIGHTS RESERVED. PUBLISHED BY EVERLAST® LIGHTING, 2021 WELLWORTH AVENUE, JACKSON, MICHIGAN 49203.

REPRODUCTION IN PART OR WHOLE OF THIS DOCUMENT IN ANY COMMERCIAL USES INCLUDING PUBLICATION, BROADCASTING OR REDISTRIBUTION IN ANY MEDIUM WITHOUT THE PRIOR WRITTEN PERMISSION OF THE PUBLISHER IS PROHIBITED. 04-15

Product Number: 64349

Order Abbreviation: MP320/350/C/PS/BU-ONLY/BT28

General Description: Dual wattage 320/350W METALARC PRO-TECH PULSE START quartz metal halide lamp, reduced color shift, EX39 base, BT28 bulb, open fixture rated, coated, base up only

Product Information	
Abbrev. With Packaging Info.	MP320350CPSBUONLYBT28 6/CS 1/SKU
ANSI Code	M154/O:M132/O:M131
ANSI Code 2	M131/O
Approx. Lumens (initial - vertical)	27700
Approx. Lumens (initial - vertical) 2	32000
Approx. Lumens (mean - vertical)	19000
Approx. Lumens (mean - vertical) 2	22000
Average Rated Life - Vertical (hr)	20000
Base	EX39 Exclusionary Mogul
Bulb	BT28
Color Rendering Index (CRI)	70
Color Temperature/CCT (K)	3900
Color Temperature/CCT 2 (K)	3900
Diameter (in)	3.504
Diameter (mm)	89.00
Family Brand Name	Metalarc® Pulse Start
Fixture Requirement	O
Hot Restrike Time (min)	5-7
Lamp Finish	Coated
Light Center Length - LCL (in)	5
Light Center Length - LCL (mm)	127
Maximum Base Temperature - Fahrenheit	410
Maximum Base Temperature - Celsius	210
Maximum Bulb Temperature - Fahrenheit	752
Maximum Bulb Temperature - Celsius	400
Maximum Overall Length - MOL (in)	8.313
Maximum Overall Length - MOL (mm)	211
Nominal Voltage (V)	135.00
Nominal Wattage (W)	320.00
Operating Position	Base Up within 15deg only
Warm-up Time (min)	2-4

Footnotes

- Use with 4000V pulse rated sockets only.
- O = Lamps classified as O-type, comply with ANSI standard C78.389 for containment testing and may be used in open luminaries. See lamp warning.
- When operated on ballasts having a sustaining voltage less than 270V, lamp life may be significantly reduced.*
- Lamps may be operated on ANSI M132 (320W) Compliant ballasts.

Metal Halide Pulse Start Specifications

350 Watt Pulse Start Metal Halide Lamps

Performance Data

Item #	Description	ANSI Designation	Light Output (Lumens @ 100 Hrs.)	Lamp Lumens Per Watt	Mean Output (Lumens)	Related Life (Hours @ 10 Hr./Start)	Correlated Color Temerature K	Chromaticity (CIE-X,Y)	Color Rendering Index (CRI)	Warm Up Time (Minutes)	Hot Restart Time (Minutes)	Burning Postition
46250	MS 350W/V/PS	M131/E	37000	106	29000	20000	4000	.385 .390	65	2-3	4-6	Vertical ±15°
46253	MS 350W/C/V/PS	M131/E	35000	100	28000	20000	3700	.395 .390	70	2-3	4-6	Vertical ±15°
46254	MS 350W/V/ED28/PS	M131/E	37000	106	29000	20000	4000	.385 .390	65	2-3	4-6	Vertical ±15°
46256	MS 350W/C/V/ ED28/PS	M131/E	35000	100	28000	20000	3700	.395 .390	70	2-3	4-6	Vertical ±15°
46257	MP 350W/C/BU/UVG/PS	M131/O	33000	94	26000	20000	3700	.395 .390	70	2-3	5-8	BU±15º
46258	MP 350W/BU/UVG/PS	M131/O	35000	100	28000	20000	4000	.385 .390	65	2-3	5-8	BU±15º
46259	MP 350W/C/BU/ED28 UVG/PS	M131/O	33000	94	26000	20000	3700	.395 .390	70	2-3	5-8	BU±15º
46260	MP 350W/BU/ED28/ UVG/PS	M131/O	35000	100	28000	20000	4000	.385 .390	65	2-3	5-8	BU±15º

Note: C designates a coated outer jacket
ANSI Designation: E = Enclosed rated luminaire, O = Open rated luminaire

Physical Data / Requirements:

Base Designation	Mogul (E39)	Mogul (EX39)	Mogul (E39)	Mogul (EX39)
Bulb Designation	ED28 (MS)	ED28 (MP)	ED37 (MS)	ED37 (MP)
Bulb Diameter	3½"	3½"	4⅝"	4⅝"
Max. Overall Length (MOL)	8 5/16"	8 5/16"	11½"	11½"
Light Center Length (LCL)	5"	5"	7"	7"
Effective Arc Length	38.4 mm	38.4 mm	38.4 mm	38.4 mm
Max. Base Temperature (ºC)	230	230	210	210
Max. Bulb Temperature (ºC)	400	400	400	400
Luminaire Type	Enclosed	Open	Enclosed	Open
Socket Pulse Rating (KV)	3-4	3-4	3-4	3-4
Socket Style	Mogul	Mogul	Mogul	Mogul

Electrical Data / Requirements:

Lamp Wattage	350
Operating Voltage (Nominal)	135
Operating Current (Amps)	2.8
Min. Open Circuit Voltage (RMS)	254
Min-max starting pulse peak (Peak V)	3000-4000
Min. Pulse Width at 2700 volts (u sec)	1
Min. Pulse Rate per ½ Cycle	1
Pulse Position (Min. % OCV Peak)	90

Notes:

Special open rated socket is required (EX39) for MP lamps.
UV Guard™ reduces normal UV emisssions up to 90%.
MP lamps are open luminaire rated and contain shrouded arc tubes.
Pulse Start lamps require an ignitor for starting.

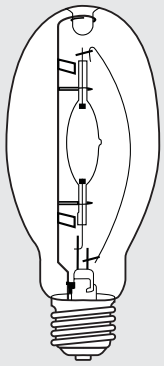

ED28
Mogul Base
Enclosed Rated

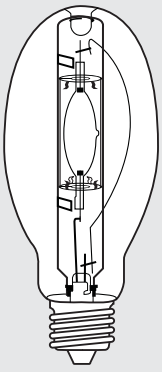

ED28
EX39 Mogul Base
Open Rated

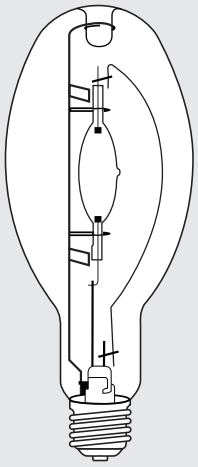

ED37
Mogul Base
Enclosed Rated

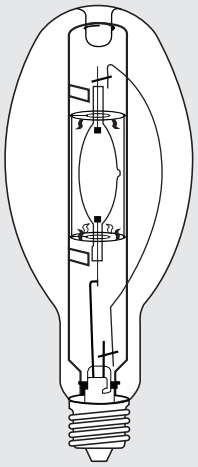

ED37
EX39 Mogul Base
Open Rated

TCP, Inc.
325 Campus Dr. | Aurora, Ohio 44202 | P: 1-800-324-1496 | F: 330-995-6188 | tcpi.com
©TCP, Inc. 2009/40208

FAIL-SAFE®

DESCRIPTION

Designed with a vertical burn lamp and symmetrical distribution in wattages up to 175W MH as an unbreakable replacement answer to commercial fixtures which might succumb to vandalism. A corrosion-resistant cast aluminum housing holds a polycarbonate diffuser that fastens with four tamper-resistant screws to prevent unauthorized access. Double gasketing seals out the environment. Specifically designed for use in public access areas where vandalism may occur. Ideal for building perimeters, parking structures, corridors, stairwells, schools and dormitories.

Catalog #		Type
Project		
Comments		Date
Prepared by		

SPECIFICATION FEATURES

Fasteners
Captive, stainless steel T20 tamperproof TORX®-head screws prevent unauthorized access.

Housing
Heavy duty, corrosion resistant cast aluminum housing withstands impact and environmental abuse. Standard bronze polyester powder coat finish.

Gasket
Non-shrinking, double-baked neoprene gasketing seals out the environment.

Lens
Nominal 0.156 UV stabilized, injection-molded, impact-resistant, prismatic polycarbonate refractor for high efficiency, low surface brightness and maximum strength.

Lamp
By others.

Reflector
Spun 0.040 aluminum reflector provides symmetrical distribution. Baked white polyester powder coat finish; minimum reflectance: 93%.

Socket
For use with HID lamps. Porcelain socket, copper screwshell, silicone braid, 150°C. For Metal Halide, protected socket is standard, for use with "O" open-rated, protected Metal Halide lamps only.

Ballast
HPF core and coil.

Labels
UL/cUL listed, standard wet label.

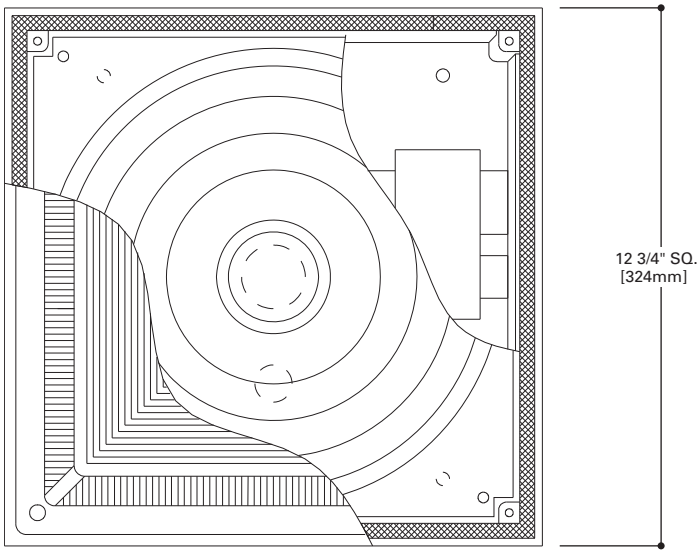

HUD

Induction
Compact Fluorescent
High Pressure Sodium
Pulse Start Metal Halide

Vandal Resistant

SURFACE
Prismatic Polycarbonate

MOUNTING DIMENSIONS

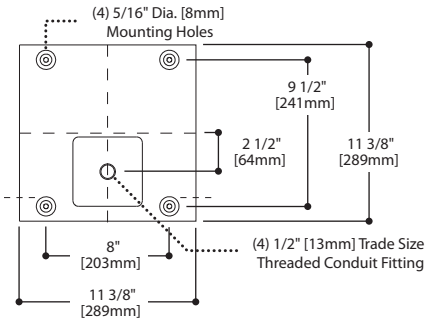

SIDE DIMENSIONS

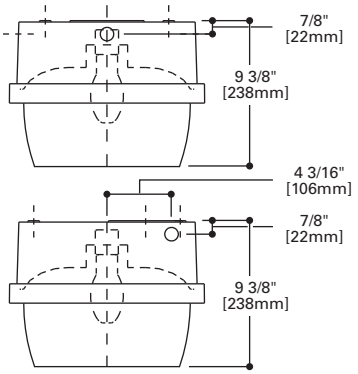

TORX® is a registered trademark of Camcar Division of Textron Inc.

ENERGY DATA

For Energy Management related technical data to support the performance of this fixture series, refer to the ordering information for input wattage.

ORDERING INFORMATION

SAMPLE NUMBER: HUD-175M-277-OR-QRS-BLK

Product Family
HUD=Cast Aluminum Surface Luminaire

Lamp Type
50S=50W HPS Medium Base
70S=70W HPS Medium Base
100S=100W HPS Medium Base
150S=150W HPS Medium Base
50M=50W MP Medium Base [4]
70M=70W MP Medium Base [4]
100M=100W MP Medium Base [4]
150M=150W MP Medium Base [4]
175M=175W MP Medium Base [4]

Fluorescent Source
213=(2) 13W Twin Tube [3]
313=(3) 13W Twin Tube [3]
226=(2) 26W Quad Tube
326=(3) 26W Quad Tube
126PLT=(1) 26W Triple Tube
132PLT=(1) 32W Triple Tube
232PLT=(2) 32W Triple Tube
142PLT=(1) 42W Triple Tube
242PLT=(2) 42W Triple Tube

Induction
55QL = (1) 55W QL Induction
85QL =(1) 85W QL Induction

Voltage [1]
120=120V
208=208V
240=240V
277=277V
DT=Dual-Tap 120/277V
MT=Multi-tap 120/208/240/277V

Socket [1]
OR =Open-rated socket for pulse start metal halide lamps [5]
__ = Non-applicable (HPS or not compatible with OR socket

Options
OPL=Opal Diffuser [2]
QRS=Quartz Restrike System (DC bayonet base; lamp by others)
QS=Quartz Socket Only (DC bayonet base)
SF=Single Fuse
DF=Double Fuse
LL=Lamp Included

Housing Finishes
Blank=Bronze (Standard)
BLK=Black
WHT=White

Accessories
(Order Separately)
VRSD=Torxhead Vandal Resistant Screwdriver
2802=Pendant Mounting Box
2811=Trunion Mounting Kit
2822=Quick Mounting Kit
PB-120=Photocell 120V
PB-277=Photocell 277V

Notes:
[1] Products also available in non-US voltages and 50Hz for international markets. Consult your Cooper Lighting Representative for availability and ordering information.
[2] 150W Maximum.
[3] If 13W fixtures are ordered as electronic, lamps will be quad tube.
[4] Open-rated socket and lamp must be used.
[5] Not applicable for HPS lamps.

PHOTOMETRICS

Candlepower Distribution

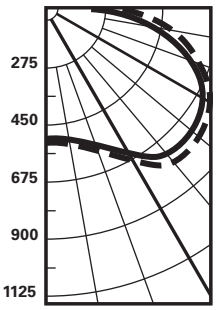

Test No. 6585.1
HUD-100MH
Lamp=MH100/U/MED
No. Lamps=1
Lumens=7600
Spacing Criteria
⊥= 2.1 II= 2.1
Efficiency=64.0%

Candlepower

Deg.	⊥	II
0	513	513
5	512	510
15	543	546
25	595	584
35	708	687
45	769	800
55	770	770
65	690	692
75	582	588
85	344	363
90	122	138

Zonal Lumen Summary

Zone	Lumens	%Lamp	%Luminaire
0-30	484	6.4	10.0
0-40	935	12.3	19.3
0-60	2389	31.4	49.4
0-90	4440	58.4	91.8
90-180	395	5.2	8.2
0-180	4835	63.6	100.0

Coefficient of Utilization

rc	80%				70%			50%		30%		10%		0%
rw	70	50	30	10	50	30	10	50	10	50	10	50	10	0
RCR														
0	74	74	74	74	72	72	72	68	68	64	64	60	60	58
1	65	61	57	54	59	55	52	55	50	52	47	48	45	43
2	58	51	45	40	49	44	39	46	37	43	36	40	34	32
3	51	43	37	32	42	36	31	39	30	36	28	34	27	25
4	46	37	30	25	36	30	25	34	24	31	23	29	22	20
5	42	32	25	20	31	24	20	29	19	27	18	25	18	16
6	38	28	21	17	27	21	16	25	16	24	15	22	14	13
7	35	25	18	14	24	18	13	22	13	21	12	19	12	10
8	32	22	16	11	21	15	11	20	11	18	10	17	10	09
9	29	19	13	10	19	13	09	18	09	16	09	15	08	07
10	27	18	12	08	17	12	08	16	08	15	07	14	07	06

rc=Ceiling reflectance, rw=W all reflectance, RCR=Room cavity ratio
CU Data Based on 20% Effective Floor Cavity Reflectance.

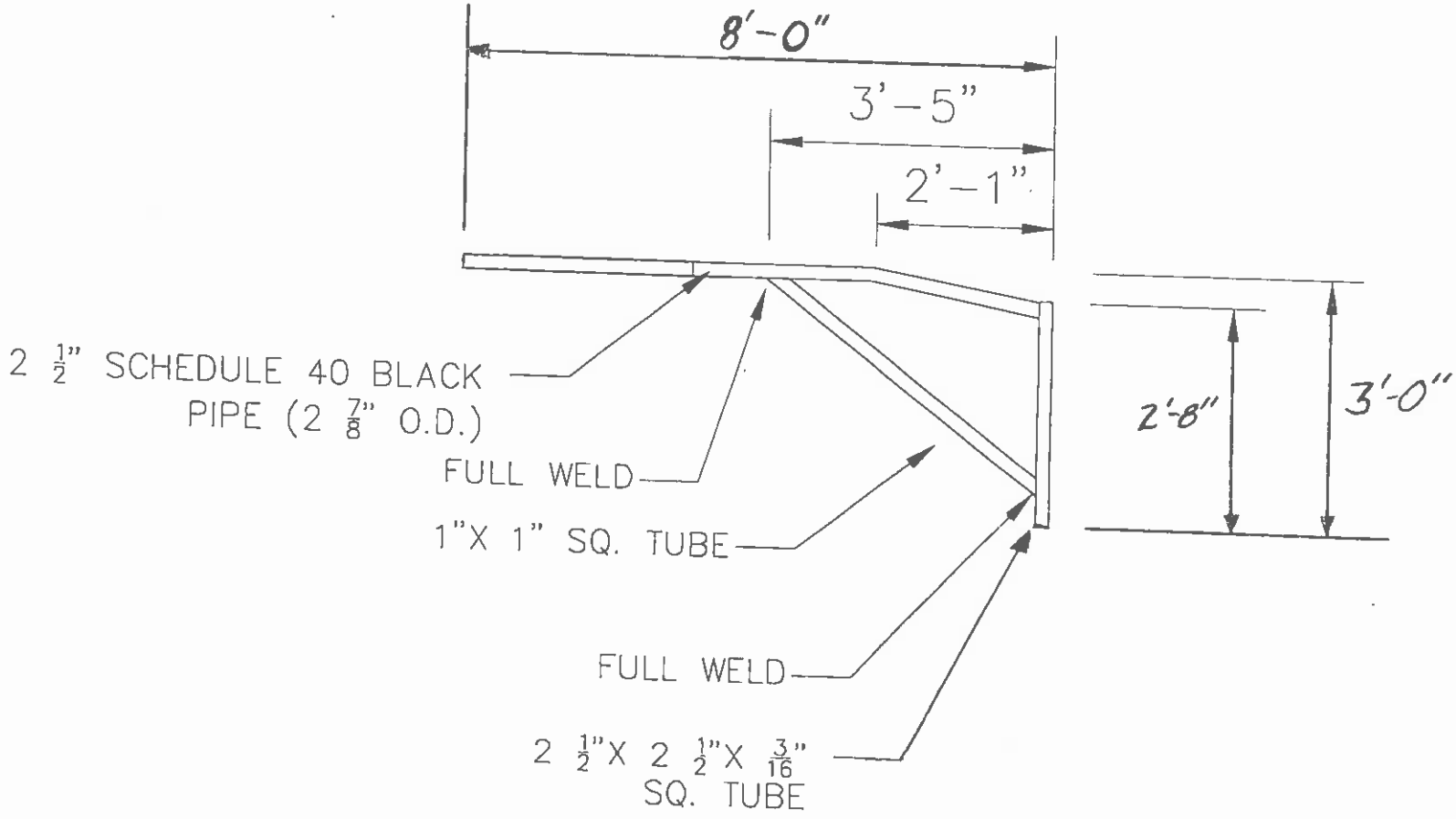

Wood Pole LIGHT POLE ARM

Single Floor Block Diagram 2012 V2

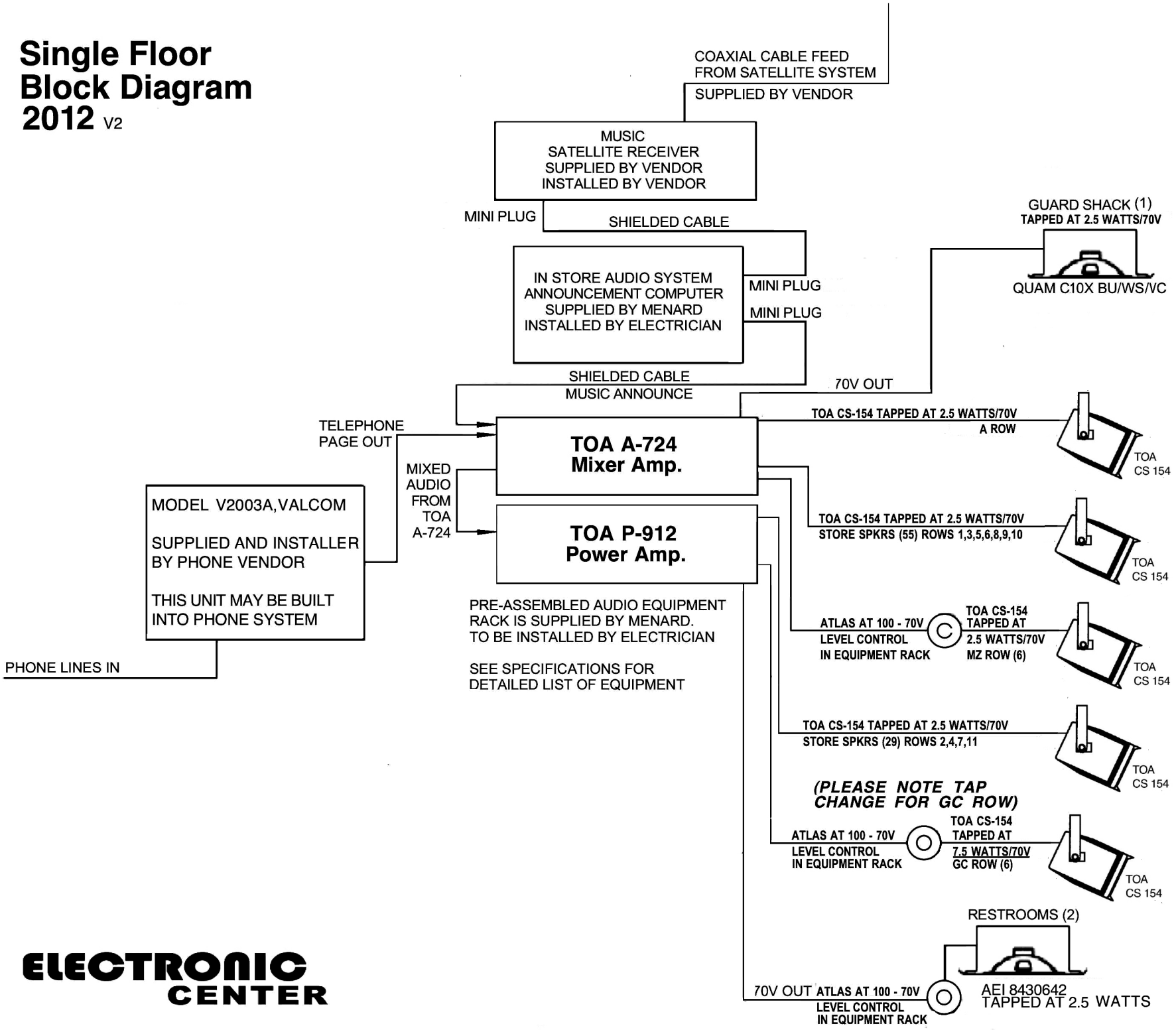

ELECTRONIC CENTER

Store Sound Proposal

March 24, 2011

March 22, 2011

TABLE OF CONTENTS

Store Sound Plan Proto V

Quote 2011-2012
- Product List
- Wiring Plan
- Rack Layout
- Rack Side View
- Block Diagrams
- Product Documentation
  - Atlas AT 10RM Specification Sheet
  - Atlas AT 100 Manual
  - Atlas WD417 Manual
  - Atlas WD417 Specification sheet
  - Furman FX-8
  - Middle Atlantic Products EWR 12-22
  - QUAM ERD8U specification Sheet
  - QUAM C10X Series Specification Sheet
  - TOA A-724 Specification Sheet
  - TOA A-724 manual
  - TOA CS 154 specification sheet
  - TOA CS-154 manual
  - TOA P-912 Specification Sheet
  - TOA P-912 manual

Store Sound Plan Two Story

- Product List
- Wiring Plan
- Rack Layout
- Rack Side View
- Block Diagrams
- Product Documentation
  - Atlas AT 10RM Specification Sheet
  - Atlas AT 100 Manual
  - Atlas WD417 Manual
  - Atlas WD417 Specification sheet
  - AudioTechnica AT Pro 44 PZM
  - Furman FX-8
  - Middle Atlantic Products DWR 21-22,
  - QUAM ERD8U specification Sheet
  - QUAM C10X Series Specification Sheet
  - TOA A-724 Specification Sheet
  - TOA A-724 manual
  - TOA CS 154 specification sheet
  - TOA CS-154 manual
  - TOA P-924 MKII Specification Sheet
  - TOA P-924 MKII manual

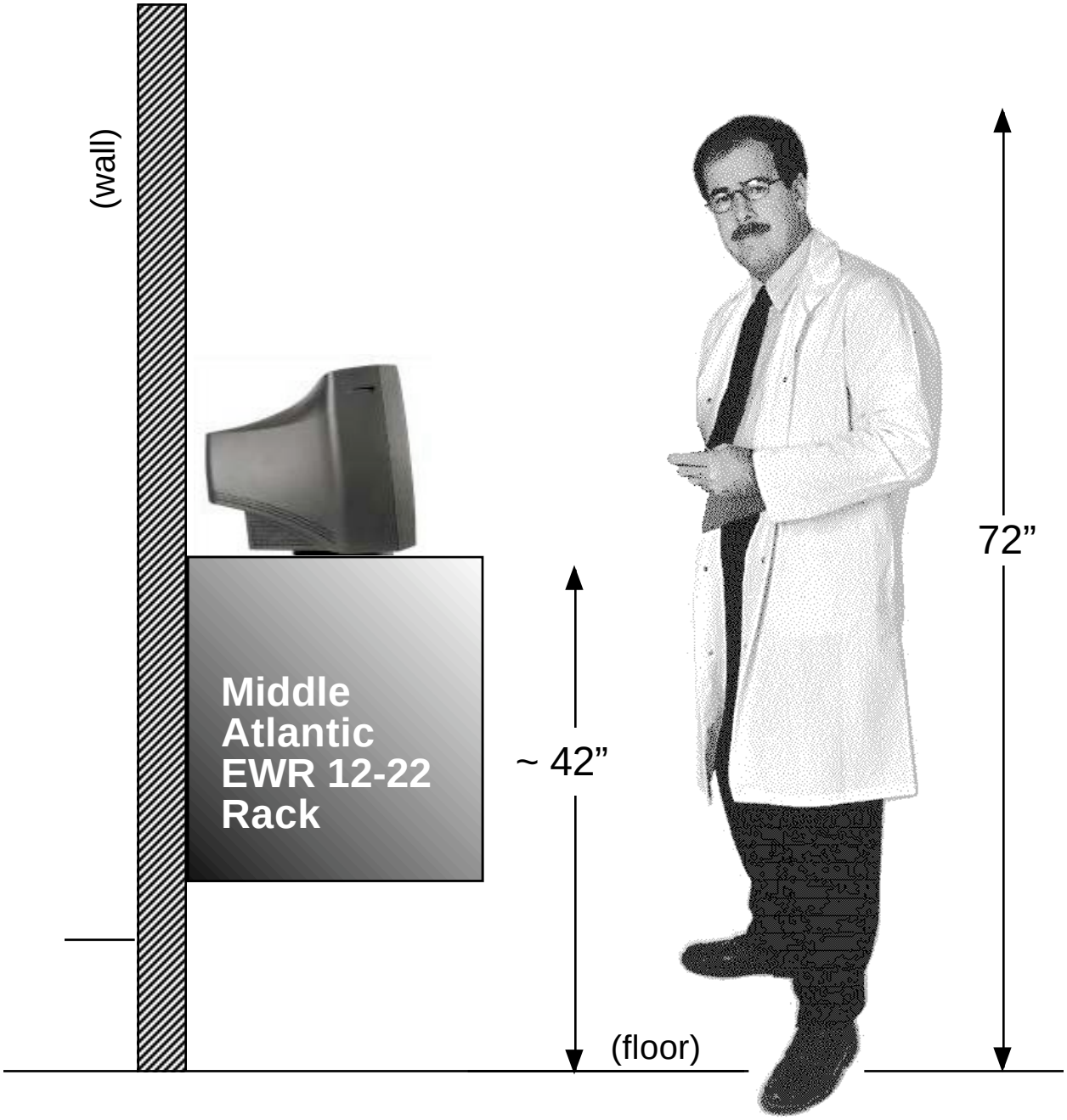

SIDE VIEW EQUIPMENT RACK
MENARD STORE

March 16, 2010

ELECTRONIC CENTER

Middle Atlantic
EWR 12-22 with
3 installed
Atlas AT-100 Level controls

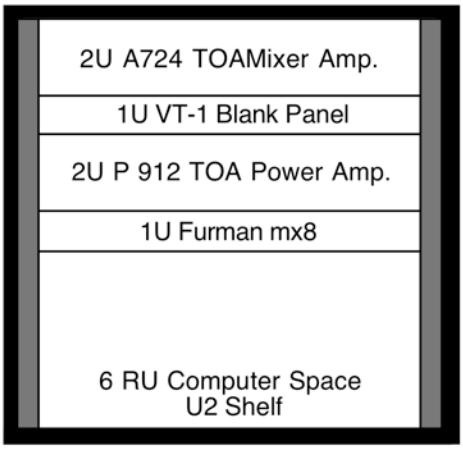

Menard
Equipment Rack Layout

March 16, 2010

ELECTRONIC
CENTER

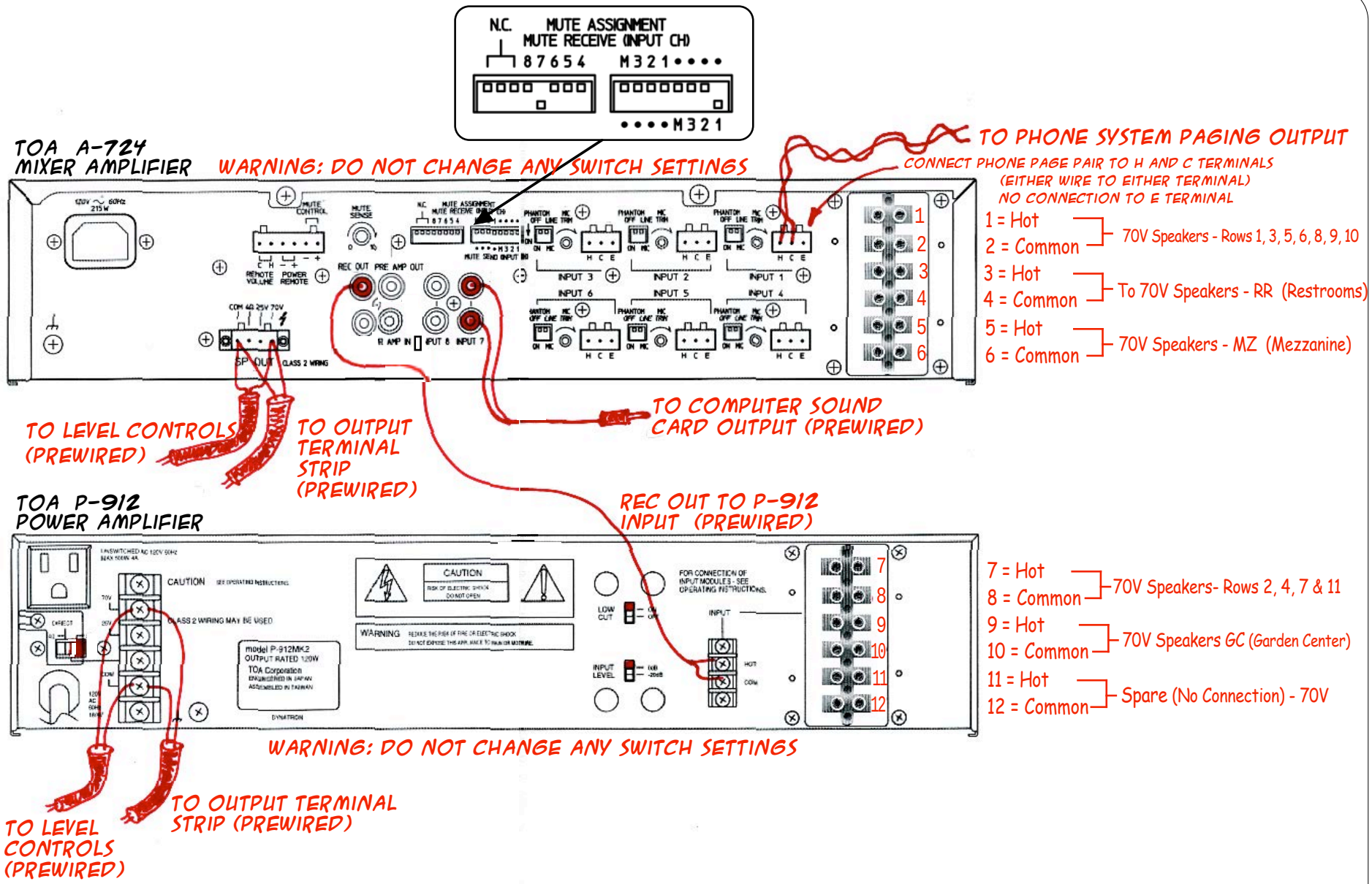

ELECTRONIC CENTER

MONDAY - FRIDAY 7:00 TO 5:30
SAT. 9:00 TO NOON
763 543 2585 - 800 328 0270
763 543 2599 FAX

SINGLE STORY
WIRING DIAGRAM - PROTO V
ALL RIGHTS RESERVED
MENARD STORE
DECEMBER 28, 2011

AT Series Attenuators
E408-100 Precision Attenuator

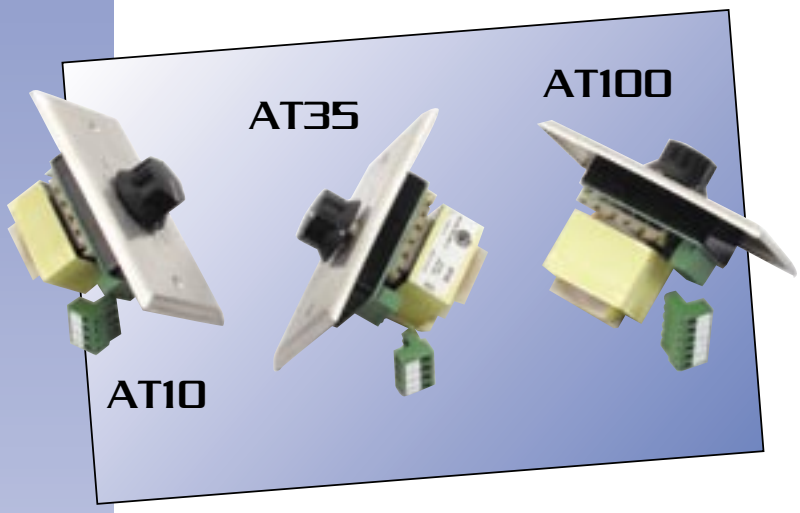

Atlas Sound Attenuators are designed with a smaller footprint to fit easily into readily available electric outlet boxes while maintaining the highest levels of efficiency. A higher quality core (see "The Method" below) was the primary requirement to make the unit smaller and reach this design goal.

Common Features

- Detachable "Phoenix" Style Connector for Easy Installation
- Newly Designed D-shaft Knob for Better Stability
- UL Listed

AT Series Features

- 10, 35 & 100 Watt Models
- 3dB/step Positive Detent Attenuation (10 steps plus off)
- Standard Model includes Stainless Steel Single Gang Wall Plate with Dial Scale, and a Skirted Black Knob
- Decora model (ATxxD) includes both White and Ivory Plastic Trim Plates, Inserts, and Matching Skirted Knobs
- All Models Now Mount into Most 1-Gang E.O. Boxes
- Popular Rack Mount Attenuator Versions are Available for Mounting onto Blank Panels in Equipment Cabinets With Optional **ATPLATE-052** Rack Mount Kit
- Optional "Priority Relay" Models Available in stainless plate or rack versions

E408-100 Features

- 100 Watt power rating
- 1.5dB/step Positive Detent Attenuation (10 Steps plus off) specially designed for sound masking applications where precise zone level control is required
- Includes Stainless Steel Single Gang Wall Plate with Dial Scale and Skirted Black Knob as well as matte black polycarbonate dial scale overlay for rack mounting applications when used with optional **ATPLATE-052**

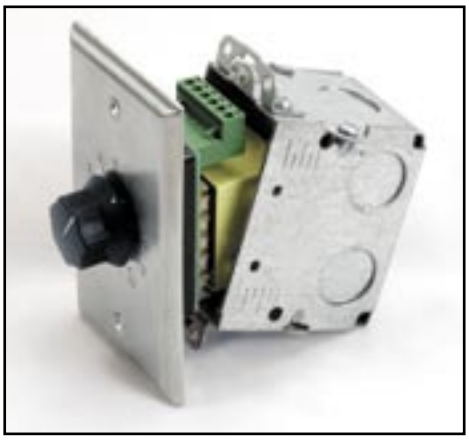

AT100
shown in standard backbox

Standard Wall Plates are Stainless Steel with Stamped & Filled Dial Scale, and a Skirted Black Knob.

AT10D, AT35D and AT100D models include both White and Ivory Plastic decora inserts, trim plates and Skirted Knobs.

The Method

Steel - Atlas Sound uses grain-oriented silicon iron laminates in it's attenuators. Steel can be thought of in terms of efficiency. Grain-oriented laminations carry higher magnetic flux densities and require lower magnetizing currents. If the laminations can carry a higher magnetic flux density, a smaller cross-sectional area (smaller core) is required for a given application.

A smaller core leads to fewer turns of copper (wire) required to excite it. Less copper means lower resistance and lower heat. Lower heat means higher efficiency. Choosing a higher grade of transformer lamination translates, in every way to higher efficiency in smaller designs.

Precise Transformer Windings

Atlas Sound utilizes state of the art transformer winding machines to create the most dense wire pack possible helping to create an incredibly efficient performance in the new smaller footprint.

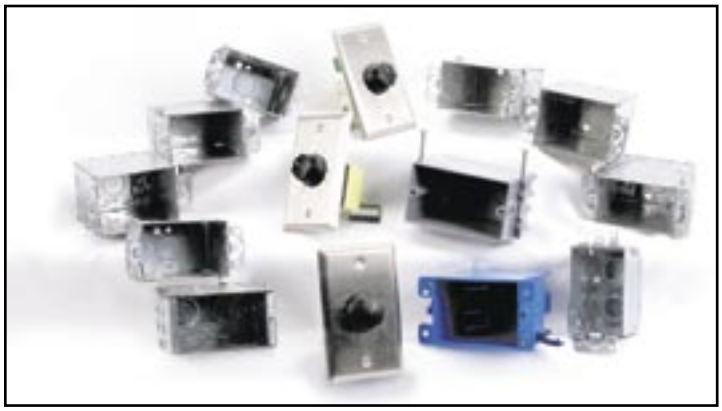

Shown with standard electrical boxes

Three AT Attenuators shown mounted on the new Atlas Sound Model AT PLATE-052

The VPF (Vacuum Pressure Finalization) Process

All transformers are varnished or wax dipped, but Atlas Sound Transformers are varnish dipped in a vacuum. To cure the varnish at an accelerated rate the transformers are then removed and baked at 130° C. Varnish dipping not only seals the assembly by locking the laminates, bobbin and windings in place, it also minimizes "singing." Poorly sealed transformers produce a humming or vibrating sound when driven at near capacity. In extreme cases, one can actually hear the music through the attenuator. The sound is the result of the bobbin or windings vibrating against each other or against the steel laminates in the alternating magnetic field produced in the iron.

The Results

An amazing performance from a new compact unit poised to become the standard for the next generation of 70.7V auto-former attenuator applications.

DIMENSIONAL SPECIFICATIONS PLATE MOUNTED ATTENUATORS

MODEL	A	B	C	D	E
AT10	4 1/2"	2 1/8"	2 3/4"	2 3/4"	1 3/4"
AT10-PA	4 1/2"	2 1/8"	2 3/4"	2 3/4"	1 3/4"
AT35	4 1/2"	2 1/8"	2 3/4"	2 3/4"	1 3/4"
AT35-PA	4 1/2"	2 1/8"	2 3/4"	2 3/4"	1 3/4"
AT100	4 1/2"	2 1/2"	2 3/4"	2 3/4"	1 3/4"
AT100-PA	4 1/2"	2 1/2"	2 3/4"	2 3/4"	1 3/4"
E408-100	4 1/2"	2 5/8"	2 1/16"	2 3/4"	2 5/16"

Side View

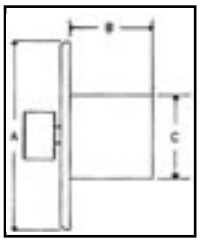

Top View

MODEL	POWER RATING (WATTS)	ATTENUATION PER STEP	TOTAL ATTENUATION	INSERTION LOSS	PLATE STYLE	PLATE TYPE	PRIORITY PAGE RELAY
AT10	10	3dB	27dB	.4dB	STANDARD, 1 Gang	STAINLESS	N/A
AT10D	10	3dB	27dB	.4dB	Decora, 1 Gang	Inc. WHITE & IVORY INSERTS, TRIM RINGS, KNOBS	N/A
AT10-PA	10	3dB	27dB	.4dB	STANDARD, 1 Gang	STAINLESS	24VDC,10mA, SPST
AT10-RM	10	3dB	27dB	.4dB	NONE (INC. RM DIAL SCALE)	N/A	N/A
AT10-PARM	10	3dB	27dB	.4dB	NONE (INC. RM DIAL SCALE)	N/A	24VDC,10mA, SPST
AT35	35	3dB	27dB	.6dB	STANDARD, 1 Gang	STAINLESS	N/A
AT35D	35	3dB	27dB	.6dB	Decora, 1 Gang	Inc. WHITE & IVORY INSERTS, TRIM RINGS, KNOBS	N/A
AT35-PA	35	3dB	27dB	.6dB	STANDARD, 1 Gang	STAINLESS	24VDC,10mA, SPST
AT35-RM	35	3dB	27dB	.6dB	NONE (INC. RM DIAL SCALE)	N/A	N/A
AT35-PARM	35	3dB	27dB	.6dB	NONE (INC. RM DIAL SCALE)	N/A	24VDC,10mA, SPST
AT100	100	3dB	27dB	.6dB	STANDARD, 1 Gang	STAINLESS	N/A
AT100D	100	3dB	27dB	.6dB	Decora, 1 Gang	Inc. WHITE & IVORY INSERTS, TRIM RINGS, KNOBS	N/A
AT100-PA	100	3dB	27dB	.6dB	STANDARD, 1 Gang	STAINLESS	24VDC,10mA, SPST
AT100-RM	100	3dB	27dB	.6dB	NONE (INC. RM DIAL SCALE)	N/A	N/A
AT100-PARM	100	3dB	27dB	.6dB	NONE (INC. RM DIAL SCALE)	N/A	24VDC,10mA, SPST
E408-100	100	1.5dB	15dB	.6dB	STANDARD, 1 Gang, (INC. RM DIAL SCALE)	STAINLESS	N/A

• Five Year Limited Warranty •

Atlas Sound

1601 Jack McKay Blvd.
Ennis, TX 75119
AtlasSound.com
Tech Support 800.876.3333

Printed in the USA
Specifications are subject to change without notice.

©2004 Atlas Sound LP. Atlas Sound is a trademark of Atlas Sound LP. All rights reserved.

484076 000904 ATS001156 RevB 9/04

INDUSTRY STANDARD COMMERCIAL ATTENUATORS

AT Series, E408 Series

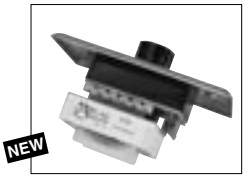

AT10 / AT35 / AT100 Series

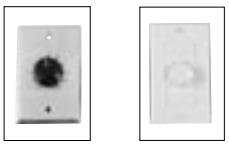

AT10 / AT35 / AT100 Series Face Plate Options
Attenuators are available in Classic Stainless or Decora(Decora available in Ivory or White)

E408-100

RM Series

- Models Feature a Range of Attenuation Steps (3dB or 1.5dB Steps) as Well as Continuous to Meet Application and Budget Requirements
- Wall Plates are Stainless Steel with Stamped and Filled or Screen Printed Dial Scale, and a Skirted Black Knob (White and Ivory Plastic Plates with Matching Skirted Knobs Also Available in Decora Style-D Series Only)
- Popular Rack Mount Attenuator Versions are Available on the AT and E408 and Series for Mounting on to Blank Panels in Equipment Cabinets
- All AT Models Mount into Most 1-Gang E.O. Boxes.
- AT and E408 Series are UL Listed

AT Series Industry Standard Auto Transformer. High-quality auto transformer series provides the advantages of excellent frequency response, low insertion loss and reliable performance for volume control application in 25 and 70.7-volt systems. Attenuation is accomplished in ten make before break steps plus positive off position. (No stop between maximum and off position to prevent switch damage). Contacts are silver plated for noise-free operation. Features a removable terminal block. Includes stainless steel plate, with stamped and filled or screen printed dial scale and a skirted black knob. (White and ivory plastic plates with matching skirted knobs also available in Decora style-see AT model description chart.)

E408 Auto Transformer with Precision Level Control. Specially designed for attenuation in masking and sound reinforcement systems where fine tuning of level control is required. Employs a ten-position, non-shorting rotary switch without stop. Attenuation rate is 1.5dB per step. (All other specifications are the same as the AT Series including the UL listing.)

PA Series Priority Paging Option. Priority paging feature by-passes the effect of the attenuator to provide program level selection of individual emergency and paging signals at the amplifier. Option is available on all AT attenuators. The SPDT relay is operated with 24 VDC at 10mA. Includes protective relay cover to insure lasting trouble-free performance. Terminations to the relay and attenuator are made via a removable terminal block. (All other specifications except for dimensions are the same as selected AT models.

RM Series Rack Mount Option. For attenuation convenience of rack-mounted equipment in cabinets and consoles, the AT, E408 Series attenuators are available without mounting plate for rack panel installation. Attractive matte black polycarbonate dial scale overlay with adhesive backing replaces the mounting plate. Includes skirted black knob. Overlay size is 29 sq. (51mm). (To order, simply add RM after the selected attenuator model number. Example: AT10-RM or AT10-PARM.) (Dial scale overlays to retrofit existing installations are available, see hardware section Model HX23.)

FOUR

AT10 (dc) (-PA) (-RM)
AT35 (dc) (-PA) (-RM)
AT100 (dc) (-PA) (-RM)

Faceplate Options:

d = D - Decora Style Faceplate

Ivory and White inserts, trim ring and knobs icluded.

If there is not the above 1 letter suffix, the attenuator is shipped with the standard stainless steel faceplate or is the RM version without a faceplate.

(-RM) Rack Mount Option

(-PA) Priority Announce Circuit

MODEL	POWER RATING*	ATTENUATION PER STEP	TOTAL ATTENUATION	INSERTION LOSS	PLATE SIZE	RESIS-TANCE
★ **AT10(-PA)**	10 Watts	3dB	33dB**	.4dB	1 gang	—
★ **AT35(-PA)**	35 Watts	3dB	27dB	.6dB	1 gang	—
★ **AT100(-PA)**	100 Watts	3dB	27dB	.6dB	1 gang	—
E408-100	100 Watts	1.5dB	15dB	.6dB	1 gang	—

* Continuous
** These units have two steps of 6dB before off position.
Note: Attenuation curve is steeper for a 25-volt line

★ UL US LISTED

Specifications subject to change without notice

Atlas Sound
1601 JACK MCKAY BLVD. / ENNIS, TEXAS 75119 U.S.A.
TELEPHONE: (800) 876-3333 / FAX (800) 765-3435
AtlasSound.com

© 2004 Atlas Sound LP Printed in U.S.A. ATS001063 RevB 7/04 00704 SL4-2000

ARCHITECT AND ENGINEER SPECIFICATIONS

AT Series Attenuator(s) shall be Atlas Sound AT Series Model ____ _____ auto transformer or approved equal. The power rating shall be _____ and
attenuation range shall be _____dB. Attenuation per step for ET-____ and AT-____ shall be 8 steps of 3dB and 6dB each for the last two positions. Attenuator shall be a step type control with a positive off position. There shall be no stop between the maximum and off positions (AT Series only). Switch shall have silver plated contacts to eliminate noise and contact loss. All terminations must be made via a removable terminal block. Unit(s) shall be supplied with one of the following single gang face plates to be noted by model number suffix: Standard stainless steel faceplate (with dial scale to indicate attenuator position), Decora style plastic face plate-Ivory color, Decora style plastic face plate-White color. All models are designed to mount in a standard E.O. box.

E408 UL Listed attenuator shall be Atlas Sound Model _____ auto transformer or approved equal. The power rating shall be ____ _____. The attenuation per step shall be 1.5dB. Unit shall be a step type control with a positive off position. There shall be no stop between the maximum and off positions. Switch shall have silver plated contacts to eliminate noise and contact loss. The attenuator shall be mounted to a standard gang stainless steel wall plate which mounts to a standard E.O. box.

RM Option Attenuator shall be Atlas Sound Model _____ [(AT, E408 (-RM)] or approved equal. Face plate shall be replaced by an adhesive matte black polycarbonate dial scale escutcheon for attachment to a rack mount panel. Escutcheon size shall be 2" SQ.

PA Option Specified AT Series attenuators include a priority relay. Relay shall be an SPDT, 24 VDC type securely mounted to the attenuator assembly wired at the factory. Relay shall include a protective cover.

WIRING - AT SERIES

Each terminal will hold up to 2-16AWG stranded wire.
For larger wires or home run situations, a small length of wire and a wire nut are recommended.

Attach wire according to label on terminal black as shown below (Non-PA Models will not have the “VDC+” and “VDC-” terminals).

* Install the unit with the terminal block on top. This will ensure that the off position is on the bottom.

AT and E408 Series

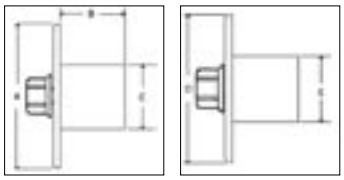

Side View **Top View**

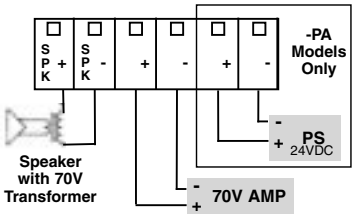

DIMENSIONAL SPECIFICATIONS - PLATE MOUNTED ATTENUATORS					
MODEL	A	B	C	D	E
NEW **AT10**	4 1/2"	2 1/8"	2 3/4"	2 3/4"	1 3/4"
NEW **AT10-PA**	4 1/2"	2 1/8"	2 3/4"	2 3/4"	1 3/4"
NEW **AT35**	4 1/2"	2 1/8"	2 3/4"	2 3/4"	1 3/4"
NEW **AT35-PA**	4 1/2"	2 1/8"	2 3/4"	2 3/4"	1 3/4"
NEW **AT100**	4 1/2"	2 1/2"	2 3/4"	2 3/4"	1 3/4"
NEW **AT100-PA**	4 1/2"	2 1/2"	2 3/4"	2 3/4"	1 3/4"
E408-100	4 1/2"	2 5/8"	2 1/16"	4 9/16"	2 5/16"

WIRING - (-PA) PRIORITY ATTENUATORS

POWER SWITCHING REQ. FOR - PA ATTENUATORS

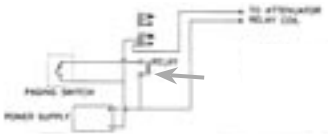

Use 2nd external relay when paging switch is part of a paging microphone.
This will reduce hum and noise pickup

RELAY SPECIFICATIONS

COIL VOLTAGE: 24VDC
COIL CURRENT: 10MA
CONTACTS: SPDT-2AMP Rating
Relay has a protective cover

SCHEMATICS FOR PRIORITY ATTENUATORS

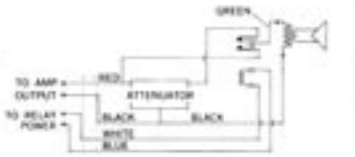

WIRING REQUIREMENTS: (1) PAIR FOR AUDIO, (1) PAIR FOR RELAY

For information on Atlas Sound Stereo Attenuators (DAT Series and SAT Series), refer to specification sheet #SL4-1523.

For information on Atlas Sound WhisperTouch Stereo Attenuators:

Original 8 Ohm #SL4-1570
Switched 8 Ohm #SL4-1571

Specifications subject to change without notice

Atlas Sound
1601 JACK MCKAY BLVD. / ENNIS, TEXAS 75119 U.S.A.
TELEPHONE: (800) 876-3333 / FAX (800) 765-3435
AtlasSound.com

© 2004 Atlas Sound LP Printed in U.S.A. ATS001063 RevB 7/04 00704 SL4-2000

ARCHITECTS AND ENGINEERS' SPECIFICATIONS

WD Series. The loudspeaker/transformer/baffle package shall be Atlas Sound WD Series Model WD417-72V. Loudspeaker shall be an 8"(203mm) dia. cone type with a 5-ounce (132g) ceramic magnet. Nominal frequency response shall be 50Hz-15kHz with a sensitivity of 96 dB at 1 watt, 1 meter. Voice coil diameter shall be 1" (25mm) with an 8-ohm impedance. Power handling capacity shall be 15 watts program. The transformer shall have a 1/2" x 5/8" core with primary taps of 1/2, 1,2, and 5 watts or 1/2,1,2, and 4 watts. The transformer voltage shall be 25/70.7 (25 or 25/70.7). Baffle (Atlas Sound Model 417-8WD) shall Slope 9.5° offset in the direction of radiation and be of particle board construction covered with a walnut laminate and black cloth grille. Baffle shall measure 9-1/2" (242mm) wide and 10-1/2"(267mm) high with a projection of 5-1/2" (140mm) at the top and 3-3/4" (95mm) at the bottom.

TRANSFORMER COLOR CODE DIAGRAMS

WD417-72(V)

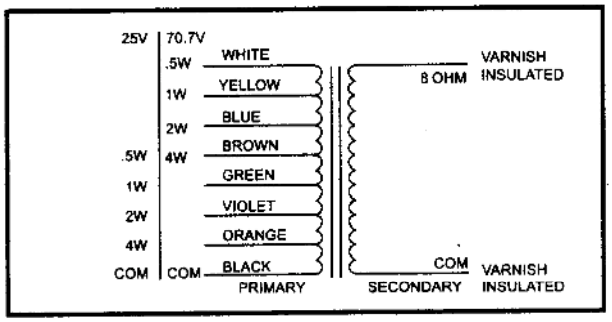

CONNECT THE 70V SPEAKER LINE TO THE BLACK AND THE BLUE LEADS (2 WATTS).

DO NOT SHORT THE UNUSED LEADS TO EACH OTHER.

Specifications subject to change without notice

1601 JACK MCKAY BLVD./ ENNIS, TEXAS 75119 U.S.A. / TELEPHONE:(800) 876-3333 / FAX (800) 765-3435

©2001 AtlasSound

Printed in China 00301 SL1-1341

PRE-ASSEMBLED 8" LOUDSPEAKER, TRANSFORMER, SURFACE BAFFLE

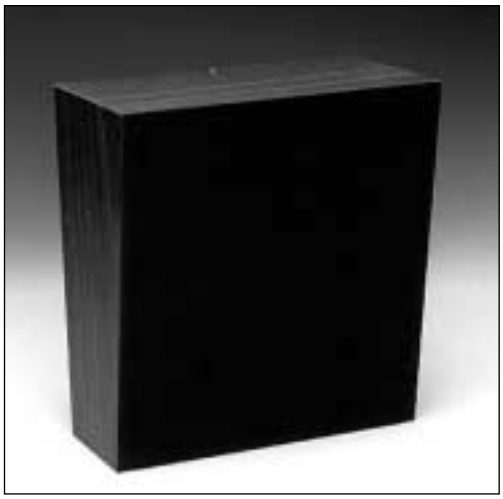

WD Series

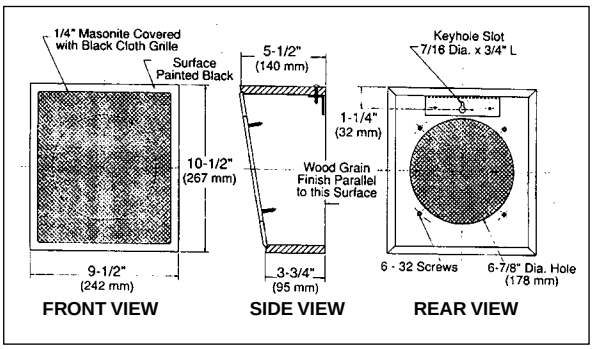

FEATURES

- Loudspeaker/Transformer/ Baffle Packages are Convenient and Cost Effective
- Attractive Design is Suitable for Use in a Variety of Surface-Mount Applications
- 9.5° Sloped Design Offers Directional Sound Projection
- Includes High-Quality 8" Loudspeaker with Line Transformer
- Available in 25, 70.7 and Dual-Voltage Models with Knob /Screwdriver-Adjust Volume Control Option

APPLICATIONS

Utilize Atlas Sound WD Series slope-front loudspeaker/baffle packages for a wide variety of surface-mount applications where aesthetics and high-quality sound reproduction are primary concerns.This attractive model series has been installed in offices, conference centers, reception areas, classrooms, lecture halls and retail outlets.

GENERAL DESCRIPTION

WD Series. These loudspeaker/baffle packages feature a walnut grain wall baffle/enclosure with an attractive black fabric grille (Atlas Sound Model 417-WD). Baffles are designed with a 9.5° slope to provide directional sound dispersion offset in the direction of radiation. Units are constructed of durable particle board and finished with a walnut grain vinyl covering.

Each package contains a high-quality 8" dia. loudspeaker with a 5-ounce ceramic magnet and exhibits a wide frequency response with low distortion. A pre-assembled transformer is available in 25 volt and dual-voltage (25/70.7) versions with four power taps (refer to model/package descriptions below). Each package is also available with a 50-ohm pot volume control for individual loudspeaker adjustment (specify models with “V” suffix). Knob may be removed and volume adjusted with a screwdriver to provide additional security if required.

MODEL / PACKAGE DESCRIPTION	
WD417-25	8" loudspeaker with 25-volt transformer
WD417-70	8" loudspeaker with 70.7-volt transformer
WD417-72	8" loudspeaker with 25/70.7-volt transformer
WD417-72V	Model WD417-72 Plus 50 Ohm Pos Volume Control

BAFFLE / ENCLOSURE SPECIFICATIONS					
ALL WD SERIES MODELS INCLUDE BAFFLE MODEL	**ENCLOSURE DIMENSIONS**				
	SLOPE	**WIDE**	**HIGH**	**PROJECTS, TOP**	**PROJECTS, BOTTOM**
417-8WD	9.5°	9½" (242 mm)	10½" (267 mm)	5½" (140 mm)	3¾" (95 mm)

LOUDSPEAKER SPECIFICATIONS	
SIZE	8" (203mm)
MAGNET	5.0 oz. (132g) Ceramic
V.C. DIAMETER	1" (25mm)
V.C. IMPEDANCE	8 ohms
FLUX DENSITY	9,200 gauss
SENSITIVITY	96dB at 1 watt, 1 meter
WATTS (PROGRAM)	15
FREQ. RESPONSE	50 Hz - 15 kHz

TRANSFORMER SPECIFICATIONS			
MODEL	**25 VOLT**	**70.7 VOLT**	**25/70.7 VOLT**
PRIMARY VOLTS	25	70.7	25/70.7
SECONDARY	8 ohms	8 ohms	8 ohms
CORE SIZE	½" x ⅝" (13 x16 mm)	½" x ⅝" (13 x 16 mm)	½ "x ⅝" (13 x 16 mm)
TAPS	C, ½, 1, 2, 5,	C, ½, 1, 2, 5	C, ½, 1, 2, 4
POWER	5 watts	5 watts	4 watts
LEADS	Color coded, stripped & tinned		

Specifications subject to change without notice

1601 JACK MCKAY BLVD. / ENNIS, TEXAS 75119 U.S.A. / TELEPHONE: (800) 876-3333 / FAX (800) 765-3435

© 2001 Atlas Sound LP Printed in U.S.A. 000501 SL1-1341

ARCHITECT AND ENGINEER SPECIFICATIONS

WD Series. The loudspeaker/transformer/baffle package shall be Atlas Sound WD Series Model _____. Loudspeaker shall be an 8" (203mm) dia. cone type with a 5-ounce (132g) ceramic magnet. Frequency response shall be 50Hz-15kHz with a sensitivity of 96dB at 1 watt, 1 meter. Voice coil diameter shall be 1" (25mm) with an 8-ohm impedance. Power handling capacity shall be 15 watts program. The transformer shall have a ½" x ⅝" core with primary taps of 1/2, 1, 2 and 5 watts or 1/2, 1, 2 and 4 watts. The transformer voltage shall be ___ (70.7, 25, or 25/70.7). Baffle (Atlas Sound Model 417-8WD) shall slope 9.5° offset in the direction of radiation and be of particle board construction covered with a walnut laminate and black cloth grille. Baffle shall measure 9½" (242 mm) wide and 10½" (267mm) high with a projection of 5½" (140mm) at the top and 3¾" (95mm) at the bottom.

Specifications subject to change without notice

1601 JACK MCKAY BLVD. / ENNIS, TEXAS 75119 U.S.A. / TELEPHONE: (800) 876-3333 / FAX (800) 765-3435

© 2001 Atlas Sound LP Printed in U.S.A. 000501 SL1-1341

M-8x² / M-8Lx / M-8Dx OWNER'S MANUAL

M-8x²

M-8Lx

M-8Dx

IDEAL FOR...

FURMAN® **MERIT SERIES POWER CONDITIONER**

CONDITIONNEUR D'ALIMENTATION MERIT / MERIT ACONDICIONADOR DE ENERGÍA

M-8x² FEATURES

- AC noise filtering to reduce radio frequency and electromagnetic interference (RFI/EMI)
- Spike & surge protection ensures equipment stays safe and your power stays clean
- “Protection OK” indicator
- 8 rear panel outlets and 1 front panel convenience outlet
- 15 amp rating, with circuit breaker
- Three year warranty

M-8Lx FEATURES

- AC noise filtering to reduce radio frequency and electromagnetic interference (RFI/EMI)
- Spike & surge protection ensures equipment stays safe and your power stays clean
- “Protection OK” indicator
- 8 rear panel outlets, with front panel convenience outlet
- 15 amp rating, with circuit breaker
- Two retractable incandescent light fixtures with dimmer control for convenient rack illumination
- Three year warranty

M-8Dx FEATURES

- AC noise filtering to reduce radio frequency and electromagnetic interference (RFI/EMI)
- Spike & surge protection ensures equipment stays safe and your power stays clean
- “Protection OK” indicator
- 8 rear panel outlets, with front panel convenience outlet
- 15 amp rating, with circuit breaker
- Two retractable incandescent light fixtures with dimmer control for convenient rack illumination
- Digital voltmeter displays incoming line voltage
- Three year warranty

INTRODUCTION

Thank you for purchasing a Furman Merit Series Power Conditioner, and congratulations on your choice. The Merit Series power conditioners feature excellent surge protection as well as RFI / EMI AC noise filtration.

SAFETY INFORMATION

To obtain best results from your Furman Merit Series unit, please read this manual carefully before using.

Warnings:

To reduce the risk of electrical shock, do not expose this equipment to rain or moisture. Dangerous high voltages are present inside the enclosure. Do not remove the covers. Refer servicing to qualified personnel only.

The lightning flash with an arrowhead symbol is intended to alert the user to the presence of uninsulated dangerous voltage within the product's enclosure that may be of sufficient magnitude to constitute a risk of electric shock.

CAUTION:

This equipment shall be connected to a 20 Ampere rated receptacle of the branch circuit. The total current drawn from the receptacles of this equipment is 15 Amperes maximum, and no individual receptacle shall draw more than 12 Amperes.

Important Safety Guidelines:

(Please read prior to installation)

1. Please read and observe all safety and operating instructions before installing your Merit Series unit. Retain these instructions for future reference.

2. Your Merit Series unit should not be used near water – for example, near a bathtub, washbowl, kitchen sink, laundry tub, in a wet basement, near a swimming pool, etc.

3. Do not place your Merit Series unit near heat sources such as radiators, heat registers, stoves, or other appliances that produce heat.

4. The Merit Series units should only be connected to a 120 VAC, 60Hz, 15 amp grounded electrical outlet. Do not defeat the ground or change polarization of the power plug.

5. Route the power cord and other cables so that they are not likely to be walked on, tripped over, or stressed. Pay particular attention to the condition of the cords and cables at the plugs, and the point where they exit your Merit Series unit. To prevent risk of fire or injury, damaged cords and cables should be replaced immediately.

6. Clean your Merit Series unit with a damp cloth only. Do not use solvents or abrasive cleaners. Never pour liquid on or into the unit.

7. If any of the following events occur, contact Furman Customer Service immediately at 1-707-763-1010.

Your unit might require service if:

- The power supply cord or the plug has been frayed, kinked, or cut.
- Objects have fallen or liquid has spilled into the unit.
- The unit has been exposed to rain or other moisture.
- The unit does not appear to operate normally.
- The unit has been dropped, or the enclosure has been damaged.

- The retractable lights have failed.
- Protection OK indicator is not lit.

8. Your Merit Series unit requires that a safety ground be present for proper operation. Any attempt to operate the unit without a safety ground is considered improper operation and could invalidate the warranty.

9. Do not attempt to service your Merit Series unit beyond what is described in this manual. All other servicing should be referred to qualified service personnel.

FEATURES

M-8x²

The M-8x² power conditioner provides 9 switched outlets for powering equipment. It not only protects anything plugged into it from spikes and surges, but also has a built in AC noise filter to rid the system of RFI / EMI interference. This allows equipment to function better and last longer.

M-8Lx

In addition to features of the M-8x², the M-8Lx features incandescent rack lights and increased AC filtering. A dimmer control for the rack lights allows the user to adjust the level of illumination.

M-8Dx

In addition to all the features of the M-8Lx, the M-8Dx offers a laboratory precision digital meter that displays incoming voltage in 1-volt steps. The voltmeter's accuracy is ±2 volts.

OPERATION

Retractable Rack Lights and Dimmer Control:

The M-8Lx and M-8Dx utilize a dimmer control for the two retractable front panel light tubes. The dimmer knob controls the brightness of both light fixtures. Turn it clockwise to increase brightness; turn it counter-clockwise to decrease brightness. When the lights are not in use, we recommend pushing the fixtures all the way into the chassis (engaging the off switches) to better maximize the life of the bulbs.

On/Off Rocker Switch:

The front panel on/off rocker switches power on and off to all outlets (including the front panel outlet) as well as the retractable lights. This 15 amp capacity power switch is specifically designed to stand up to the enormous high inrush current demands of many power amplifiers.

Circuit Breaker:

If you are not getting any power to the outlets even though the unit is switched on, the circuit breaker might have tripped. To reset the circuit breaker, push the round reset button located on the rear panel.

Protection OK Indicator:

Although Furman's Ground Contamination Free Surge Suppression rarely requires servicing, nature has a way of occasionally creating electrical forces that are beyond the capabilities of any transient voltage surge suppressor device to absorb without some degree of damage. In the instance that this occurs, the "Protection OK" LED indicator will turn off. If this happens, Furman's surge suppression circuit is compromised. The unit must be returned to Furman Sound for repair.

Digital Voltmeter (M-8Dx):
Furman's digital voltmeter continually displays incoming voltage within a typical tolerance of ±2VAC.

NOTE: The Merit Series units do not compensate for high or low line voltage. If you frequently move your rack to different locations, derive power from generators, use long extension cords, travel internationally, or are in an area prone to brownouts, you may benefit from the use of one of Furman's AC Line Voltage Regulators.

THREE YEAR LIMITED WARRANTY

SAVE YOUR SALES RECEIPT! The receipt is your proof of purchase and confirms the product was purchased at an authorized Furman dealer. It will need to be submitted to Furman in order to process any warranty claims.

Furman, a brand of Panamax Inc., warrants its **Merit x Series** (the "Product") as follows:
Furman warrants to the original purchaser of the product that the product sold hereunder will be free from defects in material and workmanship for a period of three years from the date of purchase. If the product does not conform to this Limited Warranty during the warranty period (as herein above specified), purchaser shall notify Furman of the claimed defects by calling 707-763-1010 or via email (info@furmansound.com). If the defects are of such type and nature as to be covered by this warranty, Furman shall authorize purchaser to return the product to Furman headquarters. Warranty claims MUST be accompanied by a copy of the original purchase invoice or receipt showing the purchase date. Shipping charges to Furman headquarters must be prepaid by the purchaser of the product. Furman shall, at its own expense, furnish a replacement product or, at Furman's option, repair the defective product. Return shipping charges back to purchaser will be paid by Furman.

THE FOREGOING IS IN LIEU OF ALL OTHER WARRANTIES, EXPRESS OR IMPLIED, INCLUDING BUT NOT LIMITED TO THE IMPLIED WARRANTIES OF MERCHANTABILITY AND FITNESS FOR A PARTICULAR PURPOSE.

Furman does not warrant against damages or defects arising out of improper use or abnormal handling of the product, or against defects or damages arising from improper installation. This warranty shall be cancelable by Furman at its sole discretion if the product is modified in any way without written authorization from Furman or Panamax Inc. This warranty also does not apply to products upon which repairs have been affected or attempted by persons other than pursuant to written authorization by Furman or Panamax Inc.

THIS WARRANTY IS EXCLUSIVE. The sole and exclusive obligation of Furman shall be to repair or replace the defective product in the manner and for the period provided above. Furman shall not have any other obligation with respect to the products or any part thereof, whether based on contract, tort, strict liability or otherwise. Under no circumstances, whether based on this Limited Warranty or otherwise, shall Furman be liable for incidental, special, or consequential damages. This Limited Warranty states the entire obligation of Furman with respect to the product. If any part of this Limited Warranty is determined to be void or illegal, the remainder shall remain in full force and effect.

SERVICE

Questions or issues with your Furman unit should be directed to the Furman Customer Service Department, available 8AM-4:30PM Pacific Time at (707) 763-1010 or via email at info@furmansound.com. If a unit requires service, it must have an RA number assigned from Furman's Customer Service Department.

Before returning any equipment for repair, please be sure that it is adequately packed and cushioned against damage in shipment, and that it is insured. We suggest that you save the original packaging and use it to ship the product for servicing. Also, please enclose a brief note giving your name, address, phone number and a description of the problem. Please display your RA number prominently on the front of all packages.

M-8x² FRONT PANEL FEATURES

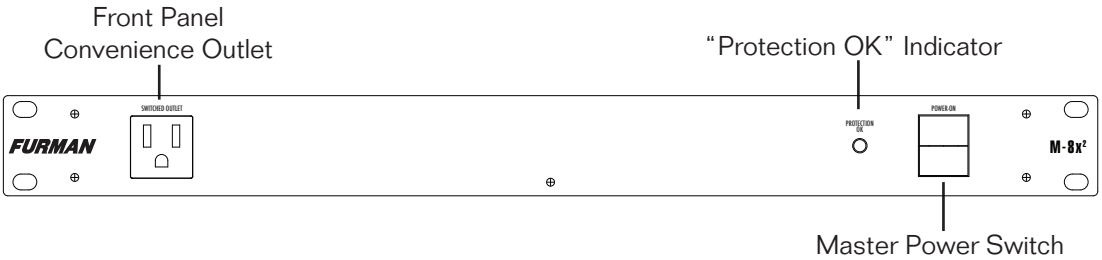

M-8Lx FRONT PANEL FEATURES

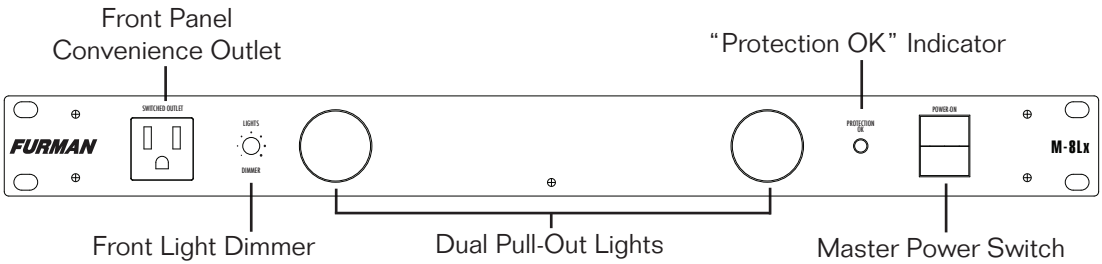

M-8Dx FRONT PANEL FEATURES

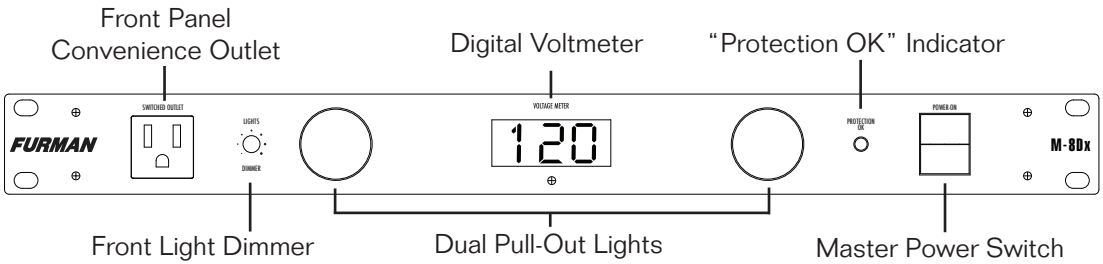

MERIT SERIES REAR PANEL FEATURES

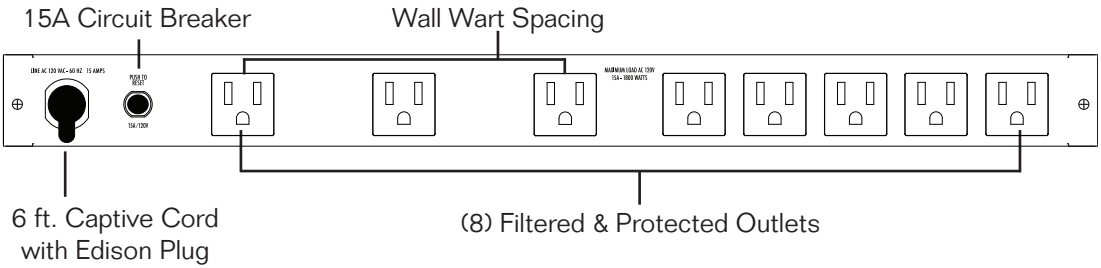

SPECIFICATIONS

Maximum Output Current:
15 amps

Line Cords:
Captive 6 foot cord, 3x14 AWG

Lamps (If present):
Two 120V incandescent bulbs, 4 watts each

Operating Voltage:
120VAC 60HZ

Spike Protection Modes:
Line to Neutral

Energy Dissipation:
150 joules

Peak Impulse Current:
12,000 amps

Maximum Continuous Operating Voltage:
130 VAC RMS

Noise Attenuation (Transverse Mode):
M-8x²: Greater than 23db, 200Khz to 10MHz
M-8Lx: Greater than 26db, 200Khz to 10MHz
M-8Dx: Greater than 26db, 200Khz to 10MHz

Dimensions:
M-8x²: 1.75" H x 19" W x 3.75" D
M-8Lx/M-8Dx: 1.75" H x 19" W x 7.5" D

Weight:
M-8x²: 4 lbs. (2 Kg.)
M-8Lx: 6 lbs. (2.7 Kg.)
M-8Dx: 6 lbs. (2.7 Kg.)

Construction:
Steel Chassis, Black Painted

CARACTÉRISTIQUES DU M-8x²

- Filtrage de l'alimentation CA permettant de réduire le brouillage radioélectrique et les perturbations électromagnétiques (RFI/EMI)
- Protection contre les transitoires et les surtensions assurant la sécurité de vos équipements et la propreté de votre alimentation
- Indicateur "Protection OK"
- 8 prises arrière et une prise pratique à l'avant
- Capacité électrique de 15 ampères, avec disjoncteur
- Garantie de trois ans

CARACTÉRISTIQUES DU M-8Lx

- Filtrage de l'alimentation CA permettant de réduire le brouillage radioélectrique et les perturbations électromagnétiques (RFI/EMI)
- Protection contre les transitoires et les surtensions assurant la sécurité de vos équipements et la propreté de votre alimentation
- Indicateur "Protection OK"
- 8 prises arrière et une prise pratique à l'avant
- Capacité électrique de 15 ampères, avec disjoncteur
- Deux lampes rétractables avec gradateur procurant un éclairage pratique du bâti
- Garantie de trois ans

CARACTÉRISTIQUES DU M-8Dx

- Filtrage de l'alimentation CA permettant de réduire le brouillage radioélectrique et les perturbations électromagnétiques (RFI/EMI)
- Protection contre les transitoires et les surtensions assurant la sécurité de vos équipements et la propreté de votre alimentation
- Indicateur "Protection OK"
- 8 prises arrière et une prise pratique à l'avant
- Capacité électrique de 15 ampères, avec disjoncteur
- Deux lampes rétractables avec gradateur procurant un éclairage pratique du bâti
- Voltmètre numérique affiche les tension de la ligne
- Garantie de trois ans

INTRODUCTION

Nous vous remercions d'avoir acheté un conditionneur d'alimentation de la série Merit de Furman et nous vous félicitions de votre choix. Les conditionneurs d'alimentation de la série Merit sont dotés d'une excellente protection contre les surtensions, ainsi que d'un filtre efficace contre les parasites causés par les interférences radioélectriques et électromagnétiques "RFI/EMI" de la tension CA.

RENSEIGNEMENTS RELATIFS À LA SÉCURITÉ

Afin de maximiser l'utilisation de votre dispositif de conditionnement de l'alimentation de la série Merit de Furman, veuillez lire attentivement ce guide avant de procéder à l'utilisation.

Avertissement :

Afin de réduire les risques d'électrocution, ne pas exposer ce dispositif à la pluie ni à toute source d'humidité. Le boîtier de ce dispositif contient une haute tension dangereuse. Ne pas retirer les couvercles. Consultez un technicien certifié pour tout appel de service.

Le symbole de l'éclair et de la tête de flèche au sein d'un triangle équilatéral sert à avertir l'utilisateur de la présence de haute tension non isolée au sein du boîtier du dispositif, pouvant être d'une force suffisante pour constituer un risque d'électrocution.

Cet appareil doit être branché à une prise appropriée sur un circuit protégé par un disjoncteur de 20 Ampères. La consommation totale de courant de tous les appareils branchés à cet appareil ne devrait pas dépasser 15 Ampères, et on ne devrait pas excéder un courant de 12 Ampères par prise de courant individuelle.

Directives importantes se rapportant à la sécurité :

(Veuillez lire ces directives avant de procéder à l'installation.)

1. Veuillez lire et observer toutes les mesures de sécurité et les instructions de fonctionnement avant d'installer votre dispositif de conditionnement de l'alimentation de la série Merit. Veuillez conserver ces instructions pour toute référence ultérieure.

2. Votre dispositif de conditionnement de l'alimentation de la série Merit ne doit pas être utilisé près de l'eau – par exemple, à proximité d'une baignoire, d'une cuvette de lavage, d'un évier de cuisine, dans un sous-sol humide, près d'une piscine, etc.

3. Ne positionnez pas votre dispositif de conditionnement de l'alimentation de la série Merit près d'une source de chaleur telle qu'un radiateur, une bouche de chauffage, un poêle ou tout autre appareil produisant de la chaleur.

4. Les dispositifs de conditionnement de l'alimentation de la série Merit ne doivent être raccordés qu'à une prise de courant de 120 volts CA, 60 Hz, 15 ampères prise de terre. Ne pas vaincre le sol ou changer la polarisation de la prise.

5. Acheminez les cordons d'alimentation et les autres câbles de manière à ce qu'on ne puisse pas les écraser ni trébucher sur ceux-ci. Portez une attention particulière à la condition des cordons et des câbles et aux points précis où ils sortent de votre dispositif de conditionnement de l'alimentation de la série Merit. Afin de prévenir les risques d'incendie ou de blessure,

remplacez immédiatement les cordons et câbles endommagés.

6. Nettoyez votre dispositif de conditionnement de l'alimentation de la série Merit uniquement à l'aide d'un chiffon humide. N'utilisez pas de dissolvant ni de nettoyant abrasif. Ne versez jamais de liquide sur le dispositif ni dans celui-ci.solvant ni de nettoyant abrasif. Ne versez jamais de liquide sur le dispositif ni dans celui-ci.

7. Si l'une des circonstances ci-dessous se produit, communiquez immédiatement avec le service à la clientèle de Furman.
Votre dispositif peut avoir besoin de service si :

- Des objets ou du liquide ont pénétré dans le boîtier du dispositif;
- Le dispositif a été exposé à la pluie ou à une source d'humidité;
- Le dispositif ne semble pas fonctionner normalement;
- Le dispositif a été échappé ou le boîtier, endommagé;
- Les lampes rétractables n'allument plus.

8. Ne tentez pas de réparer votre dispositif de conditionnement de l'alimentation de la série Merit au-delà de ce qui est décrit dans ce guide. Tout autre entretien doit être acheminé au centre de service certifié.

CARACTÉRISTIQUES

M-8x²

Le conditionneur d'alimentation M-8x² procure (9) prises de courant commutées permettant d'alimenter vos appareils. En plus de protéger tout ce qui y est branché contre les transitoires et les surtensions, le M-8x² possède un filtre antiparasite du courant alternatif protégeant le système contre les parasites causés par les interférences radioélectriques et électromagnétiques "RFI/EMI". Ceci permet aux appareils de fonctionner mieux et de durer plus longtemps.

M-8Lx

En plus des caractéristiques du M-8x², le M-8Lx comporte des lampes permettant d'éclairer le bâti. Un gradateur des lumières du bâti permet à l'utilisateur d'ajuster le niveau d'éclairage.

M-8Dx

En plus de toutes les caractéristiques de la M-8Lx, la M-8Dx offre une précision de laboratoire numérique compteur qui affiche les tension de 1 volt étapes. Le voltmètre de précision est de ± 2 Volts.

FONCTIONNEMENT

Lampes à rétractables du bâti et gradateur :

Le M-8Lx/M-8Dx utilise un gradateur pour les deux tubes lumineux rétractables situés sur le panneau avant. Le bouton du gradateur contrôle la luminosité des deux dispositifs d'éclairage. Tournez-le dans le sens horaire pour augmenter la luminosité et dans le sens antihoraire, pour diminuer celle-ci. Lorsque vous n'utilisez pas les voyants, nous recommandons d'enfoncer les tubes d'éclairage complètement à l'intérieur du M-8Lx/M-8Dx afin de prolonger la durée des ampoules.

Commutateur à bascule de la mise en marche/arrêt :

Le commutateur à bascule du panneau avant permet de permuter entre la mise en marche/arrêt de toutes les prises (y compris la prise du panneau avant) et les lampes rétractables. Cet interrupteur d'alimentation de 15 ampères a été conçu précisément pour supporter le courant

d'appel important de nombreux amplificateurs de puissance.

Disjoncteur :
Si les prises ne fournissent pas d'alimentation, même si le dispositif est branché, il se peut que le disjoncteur ait été déclenché. Pour réarmer le disjoncteur, appuyez sur le bouton de réinitialisation 'Reset', situé sur le panneau arrière.

Indicateur Protection OK :
Bien que le système de filtrage des surtensions avec contamination nulle par la terre de Furman nécessite rarement des réparations, la nature peut parfois créer des charges électriques qui dépassent les capacités de tout appareil avec filtrage des surtensions transitoires à les absorber sans entraîner certains dommages. Dans ce cas très rare, l'indicateur "Protection OK" s'éteindra. Le niveau de protection contre les surtensions sera compromis. L'unité doit être retournée chez Furman Sound pour la réparation.

Voltmètre numérique (M-8Dx) :
Furman voltmètre numérique continuellement les mesures de tensions au sein d'un typique tolérance de ±2VAC.

REMARQUE : Les dispositifs de la série Merit ne compensent pas pour les chutes ou les pointes de tension dans la tension secteur. Si vous déplacez souvent votre bâti à différents endroits, tirez l'alimentation d'une génératrice, utilisez des rallonges électriques, voyagez à l'étranger ou résidez dans un endroit propice aux baisses de tension, l'utilisation d'un régulateur de tension CA de Furman serait avantageuse.

GARANTIE LIMITÉE DE TROIS (3) ANS

CONSERVEZ VOS REÇUS D'ACHAT ! Le reçu constitue votre preuve d'achat et confirme que le produit a été acheté chez un distributeur Furman agréé. Vous devrez l'envoyer à Furman pour toute réclamation.

Furman, une marque de Panamax Inc., garantie son **Merit x Sèrie** (le "Produit") comme suit : Furman garantit à l'acheteur original du produit que le produit vendu aux termes des présentes ne possède aucun défaut matériel et de fabrication pour une période de cinq ans à partir de la date d'achat. Si le produit n'est pas conforme à cette garantie limitée durant la période de garantie (telle que spécifiée ci-dessus), l'acheteur avisera Furman des défauts en téléphonant au numéro suivant, 707-763-1010, ou par courriel (info@furmansound.com). Si les défauts correspondent à ceux qui sont couverts par cette garantie, Furman autorisera l'acheteur à retourner le produit à son siège social. Les réclamations sous garantie doivent être accompagnées d'une copie de la facture ou du reçu d'achat original indiquant la date d'achat. Les frais d'envoi doivent être payés à l'avance par l'acheteur du produit. Furman s'engage à remplacer le produit à ses frais ou, selon son jugement, à réparer le produit défectueux. Les frais d'envoi à l'acheteur seront payés par Furman.

LE SUSDIT SUPPLANTE TOUTE AUTRE GARANTIE, EXPRIMÉE OU IMPLICITE, Y COMPRIS, MAIS PAS LIMITÉ AUX GARANTIES IMPLICITES À L'ÉGARD DE LA QUALITÉ LOYALE ET MARCHANDE VISANT UN BUT PARTICULIER.

Furman ne garantit pas contre les dommages ou défauts issus d'une utilisation inappropriée ou

de la manutention anormale du produit, ou contre les dommages ou défauts issus d'une mauvaise installation. Furman annulera cette garantie à sa discrétion si le produit a été modifié sans l'autorisation écrite de Furman ou de Panamax Inc. Cette garantie ne s'applique également pas aux produits qui ont été réparés par des personnes autres que celles autorisées (par écrit) par Furman ou Panamax Inc.

CETTE GARANTIE EST EXCLUSIVE. L'obligation unique et exclusive de Furman sera de réparer ou de remplacer le produit défectueux de la manière et selon la période indiquée ci-dessus. Furman n'aura pas d'autre obligation en ce qui a trait aux produits ou à ses pièces, que ce soit sous forme de contrat, de faute professionnelle, de responsabilité stricte ou autre. Furman ne sera pas tenu responsable, en aucune circonstance, soit sur la base de cette garantie limitée ou autre, de dommages accidentels, spéciaux ou indirects. Cette garantie limitée exprime toute l'étendue des obligations de Furman quant au produit. Si une portion de cette garantie limitée devait être jugée nulle ou illégale, le reste demeurerait en vigueur.

SERVICE

Toute question ou tout problème concernant votre appareil Furman devrait être adressé au département du service à la clientèle de Furman au 707-763-1010, de 8h à 16h (heure normale du Pacifique), ou par courriel à info@furmansound.com. Si un appareil nécessite une réparation, assurez-vous d'obtenir un numéro d'autorisation auprès du Département du service à la clientèle de Furman.

Avant de nous faire parvenir un appareil, assurez-vous qu'il soit bien emballé et protégé contre les chocs lors du transport et faites assurer le colis. Nous suggérons que vous gardiez l'emballage original et que vous l'utilisiez pour envoyer l'appareil. Veuillez également inclure une note contenant votre nom, votre adresse, vos numéros de téléphone et une description du problème. Veuillez afficher clairement votre numéro de retour à l'avant des colis.

M-8x² FRONT PANEL FEATURES

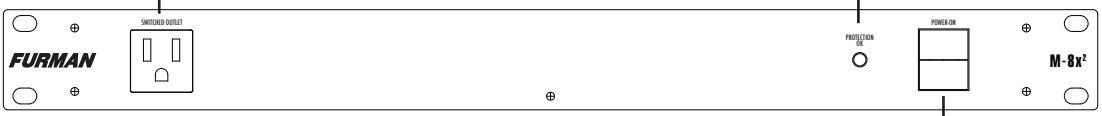

M-8Lx FRONT PANEL FEATURES

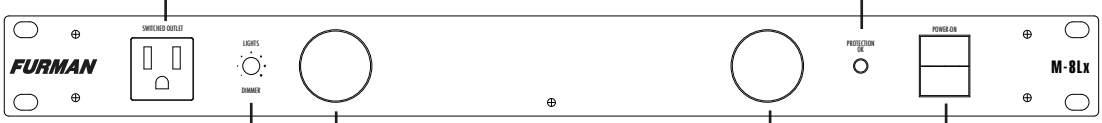

M-8Dx FRONT PANEL FEATURES

MERIT SERIES REAR PANEL FEATURES

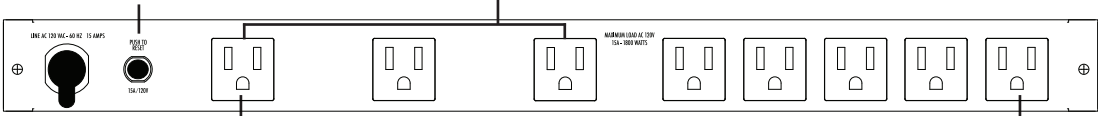

SPÉCIFICATIONS

Courant de sortie maximum :
15 ampères

Cordon d'alimentation:
La corde de 6 pieds captive, 3x14 AWG

Les lampes (si le présent) :
Deux 120V les bulbes incandescents, 4 watts chacun

Le fait de Faire marcher le Voltage :
120VAC 60 Hz

Protection de Mode de Pointe :
Ligne à Neutre

Dissipation d'Énergie :
150 Joules

Courant d'Impulsion maximal :
12,000 amps

Voltage Opérant Continu Maximum :
130 VAC RMS

Atténuation du bruit (mode transversal):
M-8x²: Plus grand que 23db, 200Khz to 10MHz
M-8Lx: Plus grand que 26db, 200Khz to 10MHz
M-8Dx: Plus grand que 26db, 200Khz to 10MHz

Dimensions:
M-8x² : 1,75 po H x 19 po L x 3,75 po P
M-8Lx/M-8Dx : 1,75 po H x 19 po L x 7,5 po P

Poids :
M-8x² : 2 Kg.
M-8Lx : 2,7 Kg.
M-8Dx : 2,7 Kg.

Construction:
Bâti en acier peint en noir

EL M-8x² CUENTA CON:

- Filtro de ruido de CA para reducir la interferencia electromagnética y radiofrecuencia (IFR/IME)
- Protección contra sobretensiones y corrientes de fuga, las cuales permiten que el equipamiento esté seguro y que su energía sea limpia
- Indicador de Protección OK
- 8 tomas de corrientes en el panel trasero, con toma de corriente de conveniencia en el panel frontal
- 15 amperios de valor nominal, con interruptor
- Tres años de garantía

EL M-8Lx CUENTA CON:

- Filtro de ruido de CA para reducir la interferencia electromagnética y radiofrecuencia (IFR/IME)
- Protección contra sobretensiones y corrientes de fuga, los cuales permiten que el equipamiento esté seguro y que su energía sea limpia
- Indicador de Protección OK
- Protección contra sobretensiones y corrientes de fuga, los cuales permiten que el equipamiento esté seguro y que su energía sea limpia
- 8 tomas de corrientes en el panel trasero, con toma de corriente de conveniencia en el panel frontal
- 15 amperios de valor nominal, con interruptor
- Luz con dos lámparas retractiles con control de graduación de luz para una iluminación práctica en el bastidor
- Tres años de garantía

EL M-8Dx CUENTA CON:

- Filtro de ruido de CA para reducir la interferencia electromagnética y radiofrecuencia (IFR/IME)
- Protección contra sobretensiones y corrientes de fuga, los cuales permiten que el equipamiento esté seguro y que su energía sea limpia
- Protección contra sobretensiones y corrientes de fuga, los cuales permiten que el equipamiento esté seguro y que su energía sea limpia
- Indicador de Protección OK
- 8 tomas de corrientes en el panel trasero, con toma de corriente de conveniencia en el panel frontal
- 15 amperios de valor nominal, con interruptor
- Luz con dos lámparas retractiles con control de graduación de luz para una iluminación práctica en el bastidor
- Medidor de voltaje
- Tres años de garantía

INTRODUCCIÓN

Gracias por comprar un Estabilizador de tensión Merit Series de Furman, y felicitaciones por su elección. Los estabilizadores de tensión Merit Series ofrecen excelente protección contra sobretensiones y además, actúan como filtro de ruido de CA para reducir la IFR/IME.

INFORMACIÓN DE SEGURIDAD

Para obtener mejores resultados de su unidad Merit Series de Furman, lea detalladamente este manual antes de usarlo.

Advertencia:

Para reducir el riesgo de descarga eléctrica, no exponga este equipamiento a la lluvia ni a la humedad. Hay altos voltajes peligrosos dentro de la caja. No quite las cubiertas. Solamente consulte a personal calificado en caso de que el equipo necesite reparación.

El flash de luz con un símbolo de punta de flecha tiene la intención de alertar al usuario sobre la presencia de voltaje peligroso no aislado dentro de la caja del producto que puede ser de una magnitud suficiente para constituir un riesgo de descarga eléctrica.

Este equipo solo deberá ser conectado con un tomacorriente especificado para 20 amperes y derivado del circuito principal. El total de corriente consumida en los tomacorrientes de este equipo no deberá exceder a 15 Amperes y ningún tomacorriente deberá proporcionar más de 12 Amperes en forma individual.

Normas importantes de seguridad:

(Lea antes de instalar)

1. Lea y observe todas las normas de seguridad y las instrucciones de operación antes de instalar su unidad Merit Series. Mantenga estas instrucciones para tenerlas como referencia en el futuro.

2. Su unidad Merit Series no debería utilizarse cerca del agua; por ejemplo, cerca de una tina, lavatorio, lavaplatos, lavadero, en una superficie húmeda, cerca de una piscina, etc.

3. No coloque su unidad Merit Series cerca de fuentes de calor, tales como radiadores, registradores de calor, hornallas, cocinas u otros dispositivos que irradian calor.

4. Las unidades Merit Series deberían estar conectadas solamente a una salida de 120VCA, 60Hz, 15A. No anule el terreno o cambiar la polarización de la energía enchufe.

5.Desvíe el cable de energía y otros cables para que no lo pisen, tropiecen o tensen. Preste especial atención a la condición en que se encuentran los cables en los enchufes, y en la parte que sale de su unidad Merit Series. Para evitar riesgo de incendio o lesión, deben reemplazarse los cables dañados inmediatamente.

6. Limpie su unidad Merit Series con un paño húmedo solamente. No utilice solventes ni limpiadores abrasivos. Nunca vierta líquido sobre ni dentro de la unidad.

7. SSi ocurre alguno de los siguientes eventos, comuníquese inmediatamente con el Servicio de atención al cliente de Furman. Su unidad podría necesitar reparación si:

- Se cayeron objetos o se derramó líquido dentro de la unidad;
- La unidad estuvo expuesta a la lluvia o hume-

dad;
- La unidad no parece estar funcionando normalmente;
- La unidad se cayó, o se dañó la caja;
- Las luces retractiles no funcionan (M-8Lx /M-8Dx).

8. No trate de reparar su unidad Merit Series de ninguna otra manera que no esté descrita en este manual. Para todos los otros servicios de reparación, se debe delegar a un personal de reparación calificado.

CARACTERÍSTICAS

M-8x²

El estabilizador de tensión M-8x² ofrece 9 salidas intercambiables para el equipamiento de energía eléctrica. No sólo protege todo lo que esté enchufado contra sobretensiones y corrientes de fuga, sino que además cuenta con un filtro de ruido de CA incorporado para evitar la interferencia IFR/IME del sistema. Esto permite que el equipamiento funcione mejor y dure mucho más tiempo.

M-8Lx

Además de las características del M-8x², el M-8Lx cuenta con luces en el bastidor. Un control de graduación de luz para las luces del bastidor, el cual permite que el usuario adapte el nivel de iluminación.

M-8Dx

Además de todas las características de la M-8Lx, la M-8Dx ofrece un laboratorio digital voltímetro de precisión que muestra los metros de tensión en 1 - voltios pasos. La precisión del voltímetro es ± 2 voltios.

FUNCIONAMIENTO

Luces retractiles en el bastidor y control de graduación de luz:

El M-8Lx y M-8Dx utiliza un control de graduación para los dos tubos de luz del panel frontal retractiles. La perilla de graduación controla el brillo de ambos artefactos de luz. Gire en el sentido de las agujas del reloj para incrementar el brillo; gire en el sentido contrario de las agujas del reloj para disminuir el brillo. Cuando las luces no se utilizan, recomendamos pulsar todos los dispositivos dentro del bastidor para maximizar la vida útil de las bombillas.

Interruptor oscilante de encendido/apagado:

Los interruptores oscilantes de encendido/apagado del panel frontal permiten encender y apagar todas las tomas de corrientes (incluso la toma de corriente del panel frontal), así como también las luces retractiles. Este interruptor de alimentación de capacidad de 15 amperios fue especialmente diseñado para tolerar las enormes demandas de corriente de entrada de muchos de los amplificadores de energía.

Interruptor:

Si no tiene energía en los toma corrientes aunque la unidad está enchufada, el interruptor puede haberse desconectado. Para reajustar el interruptor, pulse el botón redondo de reinicio ubicado en el panel trasero.

Indicador de protección:

Aunque los supresores de picos de voltaje con cero contaminación de tierra de Furman raramente requieren servicio, la naturaleza tiene una forma de crear ocasionalmente fuerzas eléctricas que están más allá de la capacidad de absorción y atenuación de cualquier dispositivo supresor de picos de voltaje, provocando un daño en ellos. En

caso de que esto llegue a suceder, el LED de protección ("Protection OK") se apagará. En este caso,el circuito de protección de Furman está siendo comprometido. Launidad deberá enviarse a servicio para su reparación.

Digital del voltímetro (M-8Dx):
Furman digital del voltímetro continuamente medidas de las tensiones dentro de una típica tolerancia de ±2VAC.

NOTA: Las unidades Merit Series no compensan el alto ni bajo voltaje de las líneas. Si mueve con frecuencia su bastidor a diferentes ubicaciones, deriva energía de los generadores, usa cables de extensión, viaja a otros países, o está en un área propensa a que ocurran oscurecimientos parciales, puede beneficiarse con el uso de uno de los reguladores de voltaje de línea CA de Furman.

TRES AÑOS DE GARANTÍA LIMITADA

¡CONSERVE SU RECIBO DE VENTA! El recibo es su prueba de compra y confirma que el producto se compró en un distribuidor autorizado por Furman. Será necesario enviarlo a Furman para procesar cualquier reclamo de garantía.

Furman, una marca de Panamax Inc., garantiza su producto **Merit x Serie** (el "Producto") de la siguiente manera: Furman garantiza al comprador original del producto que el producto vendido de acuerdo con este documento no poseerá ningún defecto de material ni mano de obra por un período de cinco años desde la fecha de compra. Si el producto no cumple con esta Garantía Limitada durante el período de garantía (como se especificó anteriormente en el presente), el comprador deberá notificar a Furman sobre los defectos reclamados a través de un llamado telefónico al 707-763-1010 o por correo electrónico a (info@furmansound.com). Si los defectos son de tal tipo o naturaleza que están cubiertos por esta garantía, Furman autorizará al comprador a devolver el producto a la oficina central de Furman. Los reclamos de garantía deben estar acompañados por una copia de la factura o recibo de compra originales que demuestren la fecha de compra. El comprador del producto deberá pagar por adelantado los gastos de envío hasta la oficina central de Furman. Furman deberá proveer, a su cargo, un producto de reemplazo o, si Furman lo decidiera, la reparación del producto defectuoso. Furman pagará los gastos de envío para devolverle el producto al comprador.

LO ANTERIOR SE CONSIDERA EN LUGAR DE TODAS LAS OTRAS GARANTÍAS, EXPRESAS O IMPLÍCITAS, ENTRE LAS QUE SE INCLUYEN, PERO NO SE LIMITAN A LAS GARANTÍAS IMPLÍCITAS DE COMERCIALIZACIÓN O DE APTITUD PARA UN FIN DETERMINADO.

Furman no ofrece garantía contra daños o defectos que surjan del uso inadecuado o de la manipulación anormal del producto, o contra defectos o daños que surjan de la instalación inadecuada. Esta garantía será cancelada por Furman a su entera discreción si el producto es modificado de alguna manera sin autorización previa de Furman o Panamax Inc. Esta garantía tampoco se aplica a productos que hayan sido reparados o hayan tenido un intento de reparación realizado por personas que no poseen autorización escrita de Furman o Panamax Inc.

ESTA GARANTÍA ES EXCLUSIVA. La única y exclusiva obligación de Furman será reparar o reemplazar el producto defectuoso de la manera y por el período mencionado anteriormente. Furman no tendrá ninguna otra obligación con respecto a los

productos ni a ninguna de sus piezas, ya sea que se base en el contrato, agravio, responsabilidad objetiva o de alguna otra forma. En ningún caso, ya sea que se basa en esta Garantía Limitada o de cualquier otra manera, Furman no será responsable por ningún daño accidental, especial o importante. Esta Garantía Limitada establece la entera obligación de Furman con respecto al producto. Si alguna parte de esta Garantía Limitada se determinara como inválida o ilegal, el resto continuará en plena vigencia y efecto.

REPARACIÓN

Si tiene preguntas o problemas con respecto a su unidad Furman, puede comunicarse con el Departamento de Atención al Cliente de Furman al (707) 763-1010 que está disponible de 8 A. M. a 4:30 P. M., Hora del Pacifico o por correo electrónico a info@furmansound.com. Si una unidad necesita servicio técnico, debe contar con un número de autorización de devolución asignado por el Departamento de Atención al Cliente de Furman.

Antes de devolver algún equipo para su reparación, asegúrese de que esté embalado correctamente y protegido de los daños que pudiera sufrir durante el envío, y que esté asegurado. Le sugerimos que conserve la caja de embalaje original y que la utilice cuando envíe el producto para el servicio técnico. Además, adjunte una nota breve en la que indique su nombre, dirección, número de teléfono y una descripción del problema. Coloque su número de autorización de devolución en tamaño grande para que se vea bien, en el frente de todos los embalajes.

M-8x² EL PANEL FRONTAL

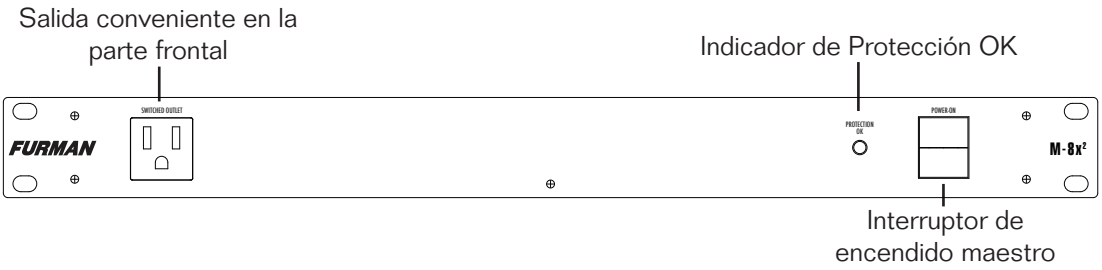

M-8Lx EL PANEL FRONTAL

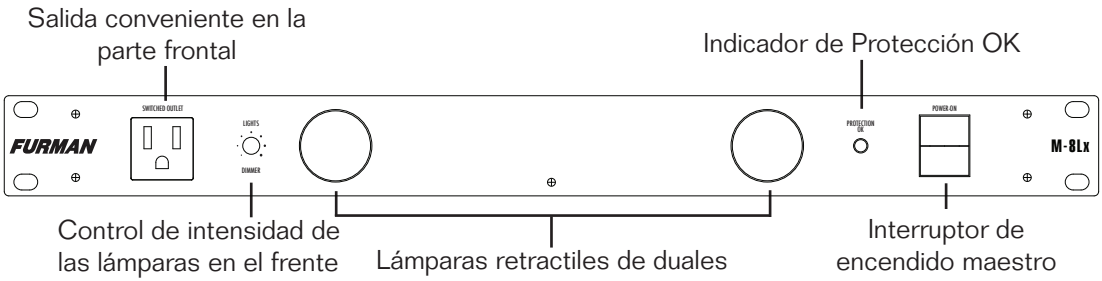

M-8Dx EL PANEL FRONTAL

MERIT SERIES LA PARTE POSTERIOR

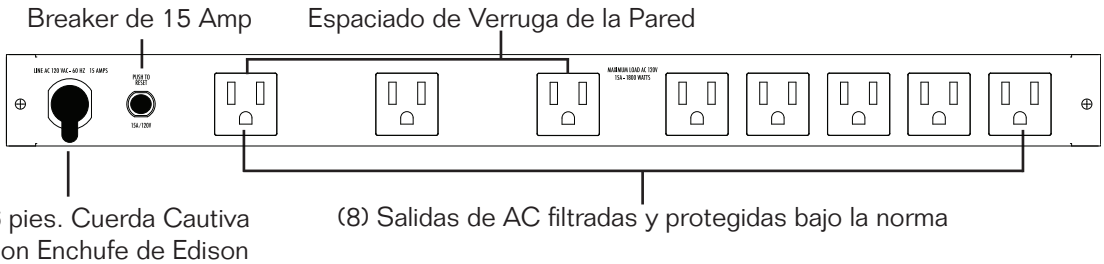

ESPECIFICACIONES

Corriente máxima de salida:
15 Amperios

Cable de línea:
Cuerda de 6 pies cautiva, 3x14 AWG

Lámparas (Si presente):
Dos 120V bulbos incandescentes, 4 watts cada uno

Voltaje de operación:
120VAC 60Hz

Modo de protección contra corriente de fuga:
Tensión de línea neutra

Disipación de energía:
150 Julios

Corriente de impulso máximo:
12.000 Amperios

Voltaje de operaciones continuo máximo:
130 VAC RMS

Atenuación de ruido (Modo transversal):
M-8x²: Mayor que 23db, 200Khz to 10MHz
M-8Lx: Mayor que 26db, 200Khz to 10MHz
M-8Dx: Mayor que 26db, 200Khz to 10MHz

Dimensiones:
M-8x²: 1.75" alto X 19" ancho X 3.75" diámetro

M-8Lx/M-8Dx: 1.75" alto X 19" ancho X 7.5" diámetro

Peso:
M-8x²: 2 Kg.
M-8Lx: 2.5 Kg.
M-8Dx: 2.6 Kg.

Construcción:
Bastidor de acero, pintado de negro

Furman
1690 Corporate Circle
Petaluma, California 94954-6919
US Phone: 707-763-1010
US Fax: 707-283-5901
Web: www.furmansound.com
E-mail: info@furmansound.com

Engineered in the USA • Manufactured in China
Conçu aux E.U.A • Fabriqué en Chine
Diseñados en los EE.UU. • Hecho en China

10/09-REV B

DWR Series Wall Mount Rack

Middle Atlantic Products, Inc.
middleatlantic.com

PATENT PENDING | EIA/TIA Compliant | c UL us LISTED

The DWR Series 19" wall mount rack is ideal when installing larger systems in both secured and non-secured areas. Broadest range of sizes available, with outstanding cable lacing features

Features

- Available in 17", 22" and 26" overall depths with 15", 20" and 24" of useable depth
- Tool-Free Quick-Mount™ system allows for easy, one-person mounting of the center section to the backpan on the jobsite
- Optional zero clearance latch allows side-by-side or corner mounting
- 16-gauge steel construction with 1/8" thick laser-cut corner braces
- Adjustable front rackrail, rear rackrail optional
- Center section hinges for left or right opening
- Cutouts for low-voltage Decora® devices in front and rear of center section, top and bottom
- Easily removable laser knockouts accommodate conduit, UHF/VHF antennas, Wiremold® 4000 series reaceways, Middle Atlantic Products universal connector panels, electrical pull-box and as many as four 4-1/2" fans
- Finished in a durable black or granite gray textured powder coat
- UL Listed in the US and Canada

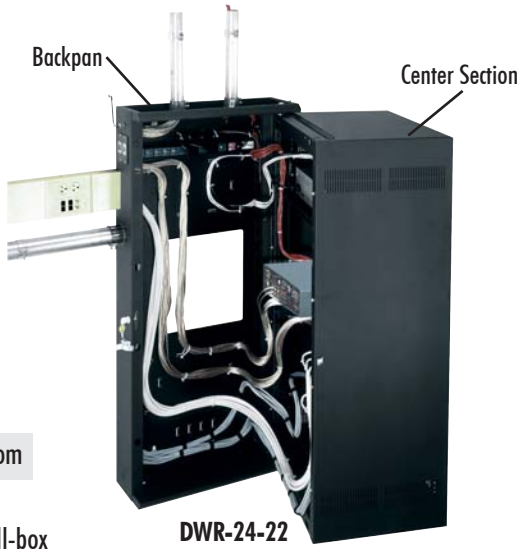

DWR-24-22

Important information regarding useable depths! SEE PAGE 3

Architects' and Engineers' Specifications

EIA compliant 19" wall mount rack shall be Middle Atlantic Products model # DWR-__-__ (refer to chart). Overall dimensions shall be 23.4" W x__" H x __" D (refer to chart). Weight capacity shall be __ lbs. (refer to chart). Tool-Free Quick-Mount™ system shall enable one-person installation. Useable depth shall be __ (refer to chart) and shall extend into the backpan 3.5". Center section and backpan shall be 16-gauge steel, finished in a black or granite gray textured powdercoat (black finish is standard, suffix part # with GY to indicate a granite gray finish) . Rackrail shall be constructed of 11-gauge steel with tapped 10-32 mounting holes in universal EIA spacing with black e-coat finish and marked rackspaces. Rack shall be constructed to swing open for component cabling access, center section shall pivot for either left or right opening. Backpan shall include raised mounting embosses to mount power products and other accessories. Rack shall have 3/4", 1", 1-1/2", 2" and 3" electrical knockouts, four Decora® cutouts, and BNC knockouts for UHF/VHF antennas knockouts top and bottom. Backpan shall have a 12-1/2" x 12-1/2" cutout for electrical pull-box. Fan knockouts on top and bottom shall allow for installation of up to four 4-1/2" fans. Rack shall include 2" and 4" knockouts for Wiremold® 4000 series raceways and knockouts for Middle Atlantic Products universal connector panels. Top, bottom and sides shall feature vertical vent pattern. Rack shall be UL Listed in the US and Canada. Rack shall be warrantied to be free from defects in materials or workmanship under normal use and conditions for the lifetime of the rack.

OPTIONS

- Front doors shall be reinforced 16-gauge steel, model # FD-XX (solid), VFD-XX (vented, 22% open area), LVFD-XX (vented, 68% open area), PFD-XX (plexi), (XX= # of rackspaces of DWR rack)
- Keyless Latch replaces keylock, fits front & rear doors, shall be models # LATCH
- Rear rail kit 11-gauge, 10-32 threaded, sold in pairs, hardware included, shall be model # DWR-RRXX
- Vent Blockers used to promote active thermal management, shall be model # VBK-D17 (fits DWR-XX-17), VBK-SD22 (fits DWR-XX-22), VBK-E20 (fits DWR-XX-26)
- Zero clearance latch shall allow side-by-side or corner mounting, shall be model # DWRSR-ZL

Engineered Mounting Solutions

US: New Jersey • California • Illinois • Voice: 973-839-1011 Fax: 973-839-1976 • middleatlantic.com
Canada: Ontario • British Columbia • Voice: 613-836-2501 Fax: 613-836-2690 • middleatlantic.ca

DWR Series basic dimensions

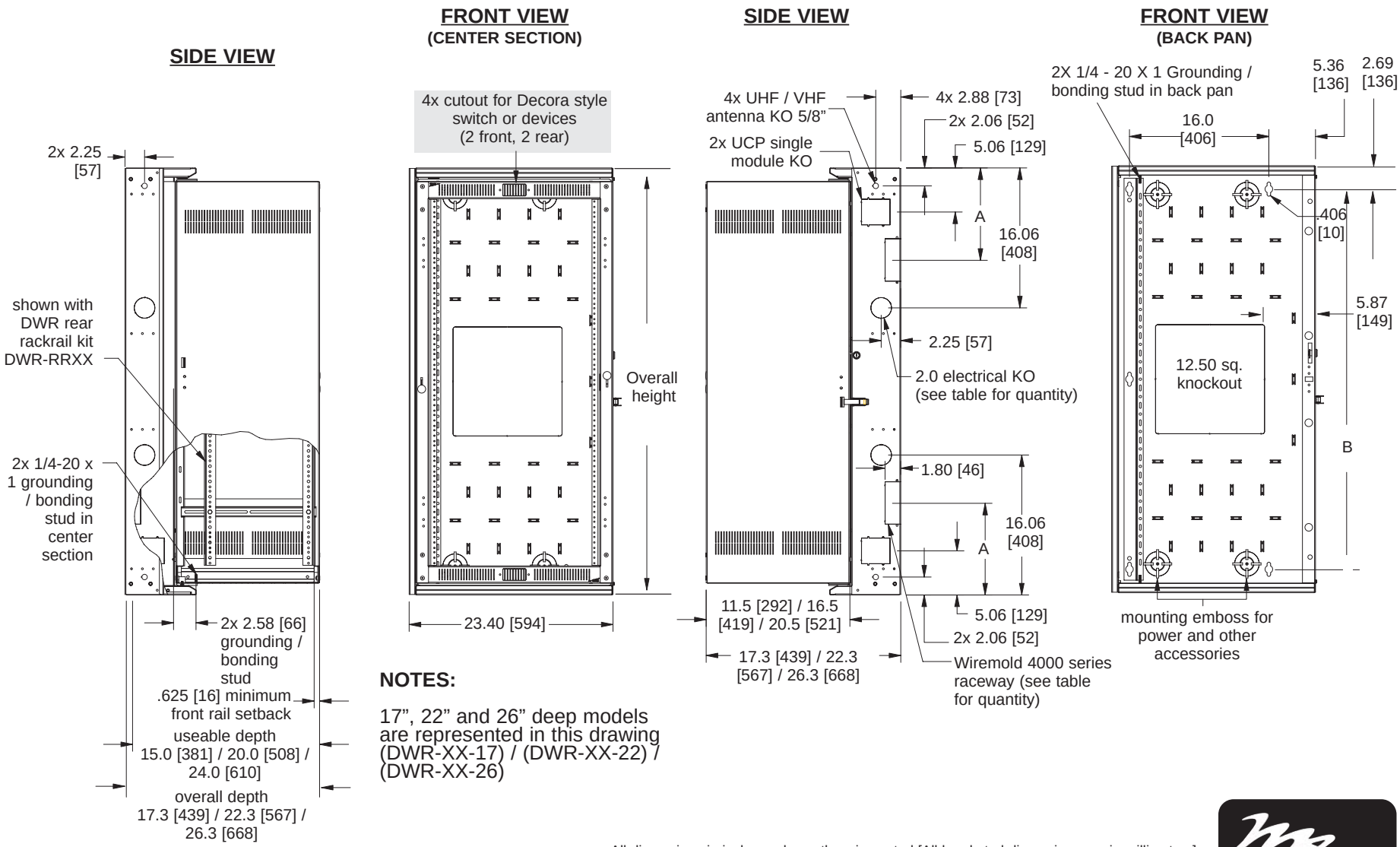

NOTES:

17", 22" and 26" deep models are represented in this drawing (DWR-XX-17) / (DWR-XX-22) / (DWR-XX-26)

All dimensions in inches unless otherwise noted [All bracketed dimensions are in millimeters]

Middle Atlantic Products, Inc.

US: New Jersey • California • Illinois • Voice: 973-839-1011 Fax: 973-839-1976 • middleatlantic.com
Canada: Ontario • British Columbia • Voice: 613-836-2501 Fax: 613-836-2690 • middleatlantic.ca

DWR Series basic dimensions

TOP VIEW

(knockouts pictured in top view are also on the bottom view)

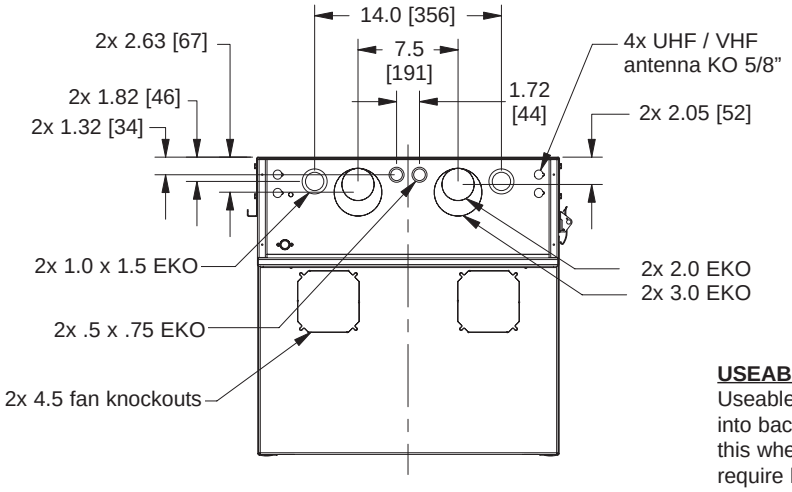

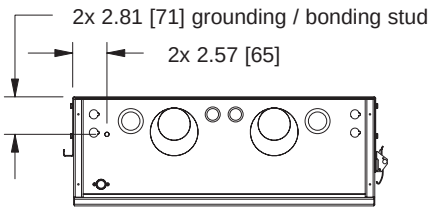

USEABLE DEPTH
Useable depth extends into backpan. Consider this when applications require large amounts of cables, connectors and/or conduit in the backpan.

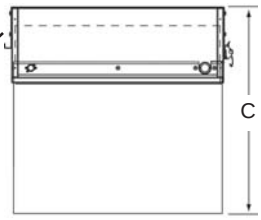

CENTER SECTION CLEARANCE

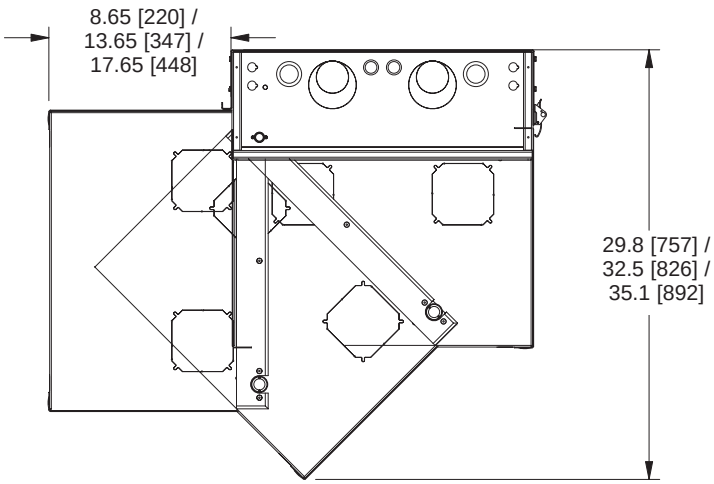

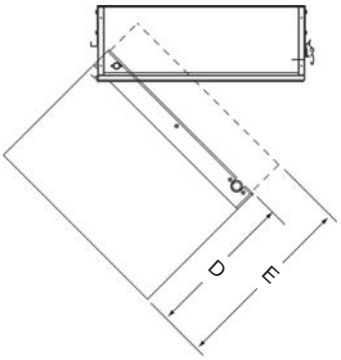

MODEL #	C OVERALL DEPTH	D CENTER SECTION DEPTH	E USEABLE DEPTH
DWR-XX-17	17.3 [439]	11.5 [292]	15.0 [381]
DWR-XX-22	22.3 [567]	16.5 [419]	20.0 [508]
DWR-XX-26	26.3 [668]	20.5 [521]	24.0 [610]

All dimensions in inches unless otherwise noted [All bracketed dimensions are in millimeters]

PART #	OVERALL HEIGHT	RACKING HEIGHT	USEABLE DEPTH	RACK SPACES	WEIGHT CAPACITY	2" EKO BACKPAN QUANTITY	WIREMOLD 4000 SERIES QUANTITY	A WIREMOLD 4000 SERIES SPACING	B MOUNTING HOLE SPACING	QTY OF MOUNTING HOLES
DWR-10-17	24.50 [622]	17.50 [445]	15	10 spaces	200 lbs.	-	1	12.25 [311]	19.13 [486]	4
DWR-10-22	24.50 [622]	17.50 [445]	20	10 spaces	200 lbs.	-	1	12.25 [311]	19.13 [486]	4
DWR-12-17	28.00 [711]	21.00 [533]	15	12 spaces	200 lbs.	-	1	14.00 [356]	22.63 [575]	4
DWR-12-22	28.00 [711]	21.00 [533]	20	12 spaces	200 lbs.	-	1	14.00 [356]	22.63 [575]	4
DWR-12-26	28.00 [711]	21.00 [533]	24	12 spaces	200 lbs.	-	1	14.00 [356]	22.63 [575]	4
DWR-16-17	35.00 [889]	28.00 [711]	15	16 spaces	200 lbs.	-	1	17.50 [445]	29.63 [752]	4
DWR-16-22	35.00 [889]	28.00 [711]	20	16 spaces	200 lbs.	-	1	17.50 [445]	29.63 [752]	4
DWR-18-17	38.50 [978]	31.50 [800]	15	18 spaces	250 lbs.	-	1	19.25 [489]	33.13 [841]	4
DWR-18-22	38.50 [978]	31.50 [800]	20	18 spaces	250 lbs.	-	1	19.25 [489]	33.13 [841]	4
DWR-18-26	38.50 [978]	31.50 [800]	24	18 spaces	250 lbs.	-	1	19.25 [489]	33.13 [841]	4
DWR-21-17	43.75 [1111]	36.75 [933]	15	21 spaces	250 lbs.	4	2	10.56 [268]	38.33 [975]	4
DWR-21-22	43.75 [1111]	36.75 [933]	20	21 spaces	250 lbs.	4	2	10.56 [268]	38.33 [975]	4
DWR-24-17	49.00 [1245]	42.00 [1067]	15	24 spaces	300 lbs.	4	2	10.56 [268]	43.63 [1108]	5
DWR-24-22	49.00 [1245]	42.00 [1067]	20	24 spaces	300 lbs.	4	2	10.56 [268]	43.63 [1108]	5
DWR-24-26	49.00 [1245]	42.00 [1067]	24	24 spaces	300 lbs.	4	2	10.56 [268]	43.63 [1108]	5
DWR-35-17	68.25 [1734]	61.25 [1558]	15	35 spaces	300 lbs.	4	2	10.56 [268]	62.83 [1597]	6
DWR-35-22	68.25 [1734]	61.25 [1558]	20	35 spaces	300 lbs.	4	2	10.56 [268]	62.83 [1597]	6
DWR-35-26	68.25 [1734]	61.25 [1558]	24	35 spaces	300 lbs.	4	2	10.56 [268]	62.83 [1597]	6

DWR Series basic dimensions with Zero Clearance Latch installed

TOP VIEW

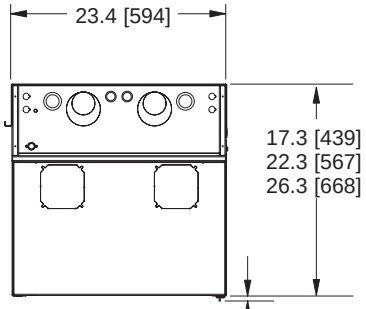

zero clearance latch adds an additional .52 [13] to front of rack

TOP VIEW
(2 DWR'S FULLY OPEN)

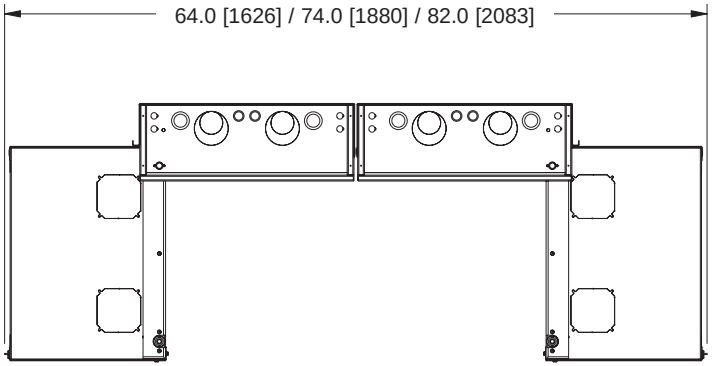

TOP VIEW
(2 DWR'S IN CLOSED POSITION)

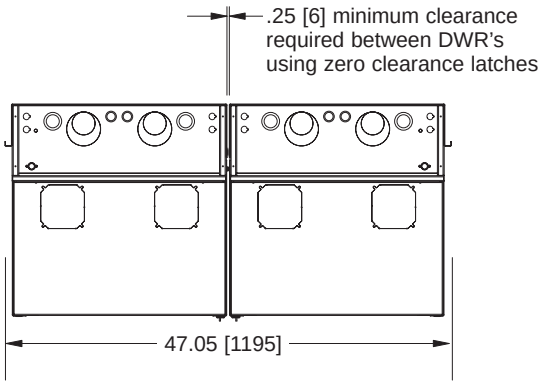

OPTIONAL DWRSR-ZL ZERO CLEARANCE LATCH OPERATION:

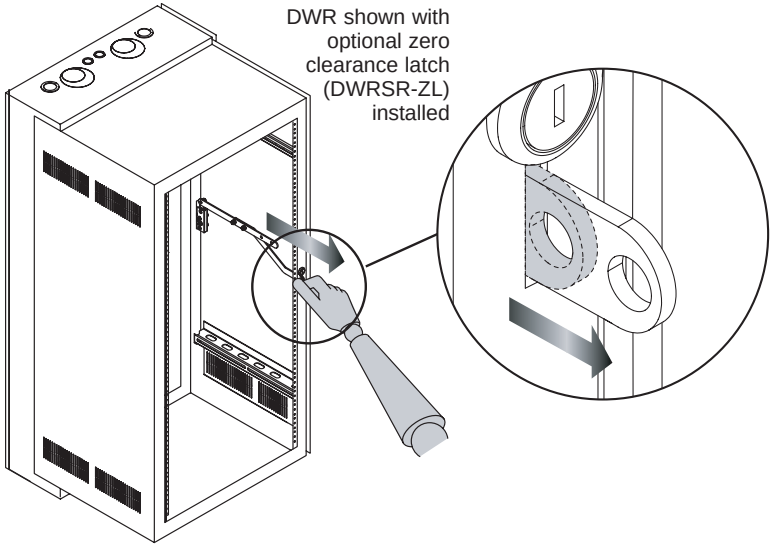

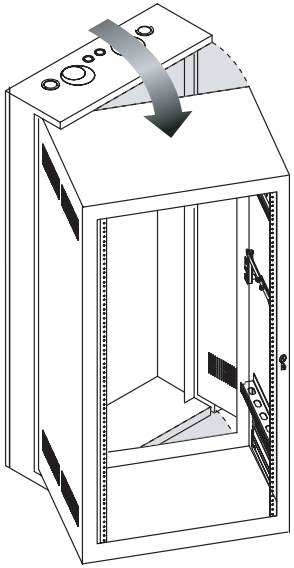

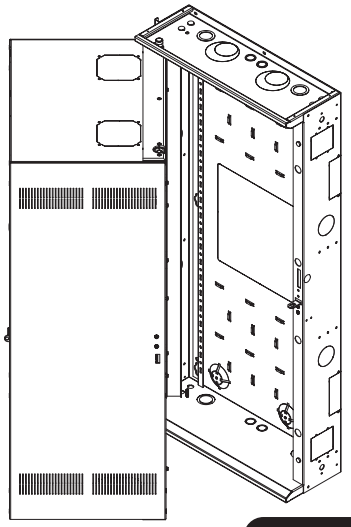

All dimensions in inches unless otherwise noted [All bracketed dimensions are in millimeters]

Middle Atlantic Products, Inc.

US: New Jersey • California • Illinois • Voice: 973-839-1011 Fax: 973-839-1976 • middleatlantic.com
Canada: Ontario • British Columbia • Voice: 613-836-2501 Fax: 613-836-2690 • middleatlantic.ca

Quote for single story pre-assembled and delivered to store sight
The parts list is a follows:

Quantity	Description			
1	**AEI 5070970 3.5 mm to Stereo RCA Cable 6'**			
3	**Atlas AT 100RM -70V Level Control**			
1	**Atlas ATPlate 19" Panel**			
2	**Quam ERD-U Back box**			
2	**AEI 8430642 8" BGM Speakers with Grilles, 70V**			
1	**Quam C10X/BU/WS/VC Speaker with Grill/70v transformer / VC**			
1	**MAP EWR-12-22SD space Wall mount rack**			
1	**Magnum 9111026 1 space blank panel**			
1	**Furman M8X2**			
1	**Magnum 9120203 2 space shelf**			
96	TOA CS-154 Speaker Horn			
1	TOA P912MKII Mixer Amp			
1	TOA A724 Power Amp			
2	TOA MB25B Rack handles			
1	**Assembly**			
1	**Rock Speaker Adapter Kit**			

C10X Series

0104.2 - Speaker, Transformer, Baffle and Universal Volume Control
0104.3 - Speaker, Transformer, Baffle
0104.4 - Speaker, Transformer

0104 - CEILING MOUNTED SPEAKER ASSEMBLIES

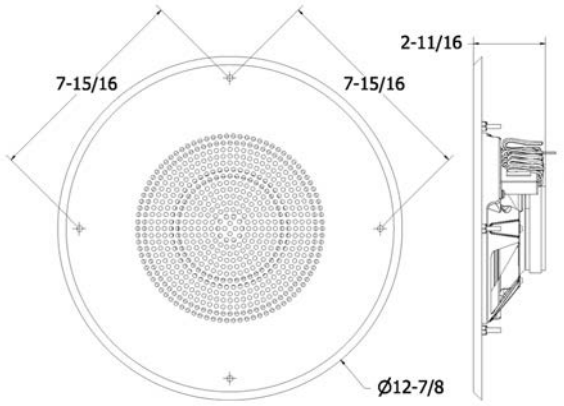

GENERAL DESCRIPTION

The Quam C10X/xx/ Wx/x is a complete loudspeaker assembly, with 8" frame, 20W dual-cone loudspeaker, steel baffle as specified; transformer and volume control as specified. Finish: Baffle, white baked epoxy hybrid, Loudspeaker, black baked epoxy hybrid.

Loudspeaker Mounting Options:
Screw mount or welded stud mount

Transformer Options: 25V, 70.7V or 25V/70.7V, pig-tail

Volume Control, Universal- If specified: Screw or knob

INTENDED USE

All variants: Downward facing, ceiling mounted, Interior environment.
Program Material: Signal tones, voice and music

SYSTEM COMPONENTS

Loudspeaker	8C10PAX
Transformer Options	5 taps at –3 dB levels
25V, 4W	Order as C10X/B25/Wx/xx
70.7V, 4W	Order as C10X/B70/Wx/xx
25V/70.7V, 5W	Order as C10X/BU/Wx/xx
Baffle Options	
Screw Mount	Order as C10X/xx/W/xx
Stud Mount	Order as C10X/xx/WS/xx
Volume Control Option	Order as C10X/xx/xx/VC

RECOMMENDED ADDITIONAL QUAM COMPONENTS:

0401.1- Backboxes, Round
0402-Loudspeaker mounting devices

ADDITIONAL COMPONENT SUBSTITUTIONS AVAILABLE

Contact Factory

AUDIO SPECIFICATIONS

Speaker Size:	8" frame
Average Sensitivity:	97 dB-SPL, 1W/ 1M
Loudspeaker Power Rating:	20W-RMS, EIA 426A Standard
Calculated Output:	104 dB-SPL, 4W/ 1M
Frequency Response: Nominal:	60Hz - 17kHz 90° Included Angle
Coverage Angle:	-6 dB / 2 kHz, Half space

Recommended construction sequences, installation instructions and A&E Specifications are available in various formats on the Quam Architects' and Engineers' Resources CD or on the web at: www.quamspeakers.com

Quam-Nichols Company
234 East Marquette Road, Chicago, IL 60637
Phone: (800) NEED NOW Fax: (888) NEED NOW
(800) 633 - 3669 (888) 633 - 3669
E-Mail: neednow@qnc.com www.quamspeakers.com

IBEW 1031
MADE IN CHICAGO

© 2006 Quam-Nichols Company Quam-Nichols reserves the right to make changes and/or improvements to its products at any time and without notice. Printed in USA TC10XSER-06N015

C10X Series

0104.2 - Speaker, Transformer, Baffle and Universal Volume Control
0104.3 - Speaker, Transformer, Baffle
0104.4 - Speaker, Transformer

0104 - CEILING MOUNTED SPEAKER ASSEMBLIES

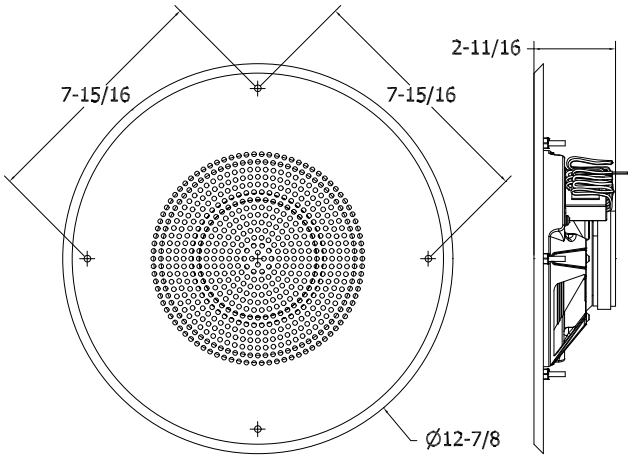

GENERAL DESCRIPTION

The Quam C10X/xx/ Wx/x is a complete loudspeaker assembly, with 8" frame, 20W dual-cone loudspeaker, steel baffle as specified; transformer and volume control as specified. Finish: Baffle, white baked epoxy hybrid, Loudspeaker, black baked epoxy hybrid.

Loudspeaker Mounting Options:
Screw mount or welded stud mount

Transformer Options: 25V, 70.7V or 25V/70.7V, pig-tail

Volume Control, Universal- If specified: Screw or knob

INTENDED USE

All variants: Downward facing, ceiling mounted, Interior environment.
Program Material: Signal tones, voice and music

SYSTEM COMPONENTS

Loudspeaker	8C10PAX
Transformer Options	5 taps at –3 dB levels
25V, 4W	Order as C10X/B25/Wx/xx
70.7V, 4W	Order as C10X/B70/Wx/xx
25V/70.7V, 5W	Order as C10X/BU/Wx/xx
Baffle Options	
Screw Mount	Order as C10X/xx/W/xx
Stud Mount	Order as C10X/xx/WS/xx
Volume Control Option	Order as C10X/xx/xx/VC

RECOMMENDED ADDITIONAL QUAM COMPONENTS:

0401.1- Backboxes, Round
0402-Loudspeaker mounting devices

ADDITIONAL COMPONENT SUBSTITUTIONS AVAILABLE

Contact Factory

AUDIO SPECIFICATIONS

Speaker Size	8" frame
Average Sensitivity	95 dB-SPL, 1W/ 1M
Loudspeaker Power Rating	20W-RMS, EIA 426A Standard
Calculated Maximum System Output	102 dB-SPL, 5W/ 1M 101 dB-SPL, 4W/ 1M
Magnet Type, Weight	BeFe Ceramic, 10 oz. Nominal
Frequency Response	60Hz - 17kHz
Nominal Coverage Angle	90° Included Angle -6 dB / 2 kHz, Half space
Audio Connection:	7" long, color-coded tinned wires, pre-cut

Recommended construction sequences, installation instructions and A&E Specifications are available in various formats on the Quam Architects' and Engineers' Resources CD or on the web at: www.quamspeakers.com

Quam-Nichols Company
234 East Marquette Road, Chicago, IL 60637
Phone: (800) NEED NOW Fax: (888) NEED NOW
(800) 633 - 3669 (888) 633 - 3669
E-Mail: neednow@qnc.com www.quamspeakers.com

RoHS Compliant
LU IBEW 1031
MADE IN CHICAGO Since 1930

© 2009 Quam-Nichols Company Quam-Nichols reserves the right to make changes and/or improvements to its products at any time and without notice. TC10XSER_09MR30

ERD-8
ERD8U

Back Box / Mounting Device
UL Listed

0401.1 - FLUSH MOUNTED, ROUND

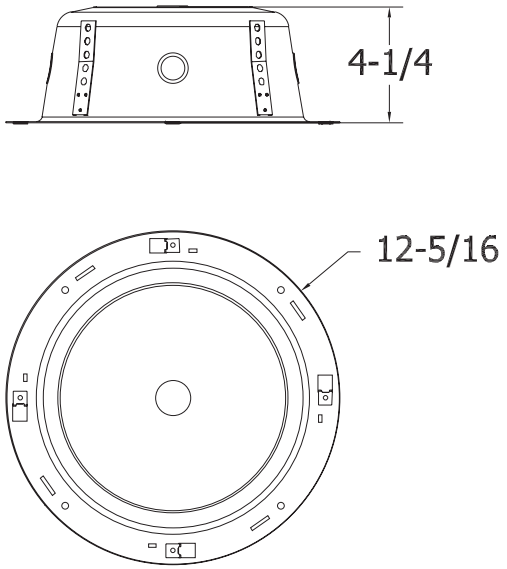

GENERAL DESCRIPTION
The Quam ERD-8 or ERD8U is a UL Listed (UUMW), round, steel loudspeaker back box. Finish: White baked epoxy hybrid.

INTENDED USE
Use with recommended additional Quam components to complete a loudspeaker assembly used in an indoor environment.

SYSTEM COMPONENTS
N/A

RECOMMENDED ADDITIONAL QUAM COMPONENTS
0402 - Loudspeaker Mounting Devices, SSB-2

0401.2 - Speaker, Transformer, Baffle & Volume Control

OR

0104.3 - Speaker, Transformer, Baffle & Universal Knob Control

MECHANICAL SPECIFICATIONS

Height	4-1/2"
Diameter (Flange Max)	12-5/16"
Bottom Diameter	9-3/4"
Top Diameter	8-1/2"
Internal Displacement	275 cu. in.

ATTACHMENT POINTS

	TOP	SIDE
ERD-8	--	4x welded
ERD8U	--	2x snap-in

ELECTRICAL ACCESS

	TOP	SIDE
ERD-8	1x	4x - 90° apart
ERD8U	1x	4x - 90° apart

All devices connect with twist-tabs to support bridge.

Recommended construction sequences, installation instructions and A&E Specifications are available in various formats on the Quam Architects' and Engineers' Resources CD or on the web at www.quamspeakers.com

Quam-Nichols Company
234 East Marquette Road, Chicago, IL 60637
Phone (800) NEED NOW Fax (888) NEED NOW
(800) 633-3669 (888) 633-3669
E-Mail: neednow@qnc.com www.quamspeakers.com

©2005 Quam-Nichols Company Quam-Nichols reserves the right to make changes and/or improvements to its products at any time and without notice. Printed in USA. TS-ERD-8/ERD8U-0605

TOA

900 SERIES

POWER AMPLIFIERS:

P-906MK2
P-912MK2
P-924MK2

THE TOA 900 SERIES are widely recognized as the industry standard in installed sound system amplification. When reliability and performance are critical – such as in paging and music distribution for airport, hospital, and industrial sound systems – you can count on the TOA 900 Series to perform consistently, day-in and day-out.

The **P-906MK2** (60 W), **P-912MK2** (120 W) and **P-924MK2** (240 W) **Single Channel Power Amplifiers** are engineered for high performance with wide frequency response, very low noise and distortion, and excellent output regulation. A single module slot allows you to easily configure custom configurations using TOA plug-in modules with an extensive array of features and connector types. Outputs include transformer-isolated 25 V, 70 V and 8 ohm plus a direct low-impedance mode if non-transformer operation is required.

Other features include a direct input, selectable input sensitivity, low-cut switch and protection circuitry.

The 900 Series Power Amplifiers are UL and cUL Listed and carry a five year warranty.

HIGHLIGHTS

- **Modular Single Channel Power Amplifiers** for paging, background/foreground music distribution and music/messaging-on-hold.
- **Proven TOA Quality and Reliability**
- **Engineered for High Performance** with wide frequency response, very low noise and distortion, and excellent output regulation.
- **Three Models:** **P-906MK2** (60 W), **P-912MK2** (120 W), **P-924MK2** (240 W)
- **Input Module Slot** accepts most TOA plug-in modules for custom system configurations.
- **25 V, 70 V and 8 Ohm Transformer-Isolated Speaker Outputs** with screw terminal connector and protective cover plate.
- **Direct Low-Impedance Output Mode** bypasses output transformer.
- **Direct Input** for connecting an external mixer or other source.
- **Selectable Input Sensitivity** to accommodate high or low input levels.
- **Master Volume Control**
- **Low Cut Switch** to limit low frequency response.
- **Normal, Clip, Power, Protect, and Signal Indicators** provide unit status.
- **Rear Panel AC Convenience Outlet** for powering external equipment
- **Turn-On Delay** disconnects output during power-up.
- **Over-current and Thermal Protection Circuitry** prevents potential damage from overload, short-circuit, or overheating.
- **Volume Control Security Knob Included**
- **Optional Rack-Mount Kits**
- **UL / cUL Listed**
- **Five Year Warranty**

OPTIONAL ACCESSORIES

Plug-in Modules (see individual module specifications)

MB-25B	Rack-mount Kit (2 RU): P-906MK2 / P-912MK2
MB-35B	Rack-mount Kit (3 RU): P-924MK2
PF-511	Perforated Rack Panel (2 RU)
YA-920	Volume Control Security Knob

900 Series Module Guide available from http://www.toaelectronics.com

SPECIFICATIONS

900 SERIES
POWER AMPLIFIERS

Tel: 800-733-7088
Fax: 800-733-9766
www.toaelectronics.com

TOA

Type	Power amplifier
Output Power	**P-906MK2**: 60 W RMS; **P-912MK2**: 120 W RMS **P-924MK2**: 240 W RMS
Power Bandwidth	(D) 20 - 20k Hz, 0.5% THD; (T) 50 - 20k Hz, 0.5% THD
Frequency Response	(D) 20 - 20k Hz, ±1 dB; (T) 20 - 15k Hz, ±1 dB (T) 20 - 20k Hz, +1 dB / -3 dB
Total Harmonic Distortion	0.01% at 1k Hz, rated output
Inputs	1 modular input port 1 direct input Use only one of direct input or modular input port.
Input Sensitivity & Impedance	Input port: 100 mV or 1000 mV (switchable)/10k Ω Direct input: 100 mV or 1000 mV (switchable)/10k Ω
Outputs (T)=Transformer, (D)=Direct	Main (T): 8 Ω, 25 V & 70 V, balanced Main (D): 4 Ω, unbalanced
Output Regulation (1k Hz)	(D): Less than 0.5 dB, no load to full load (T): Less than 1.0 dB, no load to full load
Dynamic Range (Band Pass: 20 - 20k Hz, with Tone Controls centered)	Input level switch in 0 dBV (1000 mV) position: 108 dB Input level switch in -20 dBV (100 mV) position: 90 dB
Indicators	Normal, Peak, Power, Protect, and Signal LEDs
Protection	**P-906/912MK2**: Self-protection, with internal AC fuse **P-924MK2**: Self-protection, with 2 AC fuses (1 internal) and 2 DC fuses.
Power Consumption	**P-906MK2**: 100 W; **P-912MK2**: 180 W; **P-924MK2**: 120V/3A
Temperature Range	12° F to 140° F (-10° C to +60° C)
Color	Black
Dimensions (W x H x D)	**P-906/912MK2**: 16.5" x 3.9" x 14.1" (420 x 99.1 x 358 mm) **P-924MK2**: 16.5" x 6.0" x 13.2" (420 x 151.3 x 334.2 mm)
Weight (without modules)	**P-906MK2**: 20.1 lbs (9.1 kg); **P-912MK2**: 24.0 lbs (10.9 kg) **P-924MK2**: 43.0 lbs (19.5 kg)
Other Features	Output connects approx. 5 seconds after switching power on.

APPLICATIONS

A/V Rentals
Airports
Audio/Visual
Auditoriums / Theatres
Banks
Bars / Lounges / Nightclubs
Boardrooms
Business Music
Conference Facilities
Convenience Stores
Educational Facilities
Fitness Clubs / Gymnasiums
Hotels / Hospitality
Houses of Worship
Industrial / Warehouses
Museums
Music Distribution
Offices
Public Address
Restaurants
Retail Stores
Theme Parks
Training Rooms

Visit www.toaelectronics.com to download:

900 Series Architect and Engineering Specifications
900 Series Installation Manual
900 Series CAD Files
900 Series Module Guide

900 SERIES
POWER AMPLIFIERS

Tel: 800-733-7088
Fax: 800-733-9766
www.toaelectronics.com

MODULE SELECTION

Model	Type	Description
M-01F	MIC	Microphone Input Module, Balanced, 200 Ω, Lo/Hi-Cut Filters, Female XLR
M-01M	MIC	Same as M-O1F with Male XLR
M-01P	MIC	Same as M-O1F with Phone Jack
M-01S	MIC	Same as M-O1F with Screw Terminals
M-03P	MIC	Microphone Input Module, HiZ, Unbalanced, 50k Ω, Lo/Hi-Cut Filters, Phone Jack
M-21S	MIC	Microphone Input Module, Balanced, 200 Ω, Lo/Hi-Cut Filters, Remote Vol. Control, Screw Terminals
M-51F	MIC	Microphone Input Module, Balanced, 200 Ω, Lo-Cut Filter, Voice Gate, Female XLR
M-51S	MIC	Same as M-51F with Screw Terminals
M-61F	MIC	Microphone Input Module, Balanced, 200 Ω, Lo/Hi-Cut Filters, Compressor, Female XLR
M-61S	MIC	Same as M-61F with Screw Terminals
B-01F	LINE	Balanced Line Input Module, 10k Ω Transformer, Female XLR
B-01S	LINE	Balanced Line Input Module, 10k Ω Transformer, Screw Terminals
B-21S	LINE	Balanced Line Input Module, 10k Ω Transformer, Remote Volume Control, Screw Terminals
L-01F	LINE	Line Matching Input Module, 600 Ω Transformer, Balanced, Female XLR
L-01S	LINE	Same as L-01F with Screw Terminals
U-01F	LINE	Line Input Module, Unbalanced, 220k Ω, Female XLR
U-01P	LINE	Same as U-01F with Phone Jack
U-01R	LINE	Same as U-01F with RCA Jack
U-01S	LINE	Same as U-01F with Screw Terminals
U-03R	LINE	Stereo Line Input Module, Lo/Hi-Cut Filters, Stereo Summing Dual RCA Jacks
U-03S	LINE	Line Input Module, Lo/Hi-Cut Filters, Screw Terminals
U-21S	LINE	Line Input Module, Unbalanced, 220k Ω, Remote Volume Control, Screw Terminals
U-61S	LINE	Line Input Module, Unbalanced, 220k Ω, Compressor, Screw Terminals
E-03R	SPECIAL FUNCTION	900 Series Processor Module for F-121C/CM Speakers, Dual RCA Jacks
E-04R	SPECIAL FUNCTION	900 Series Processor Module for H-1 Speakers, Dual RCA Jacks
E-05R	SPECIAL FUNCTION	900 Series Processor Module for H-2/H-2WP Speakers, Dual RCA Jacks
E-06R	SPECIAL FUNCTION	900 Series Processor Module for H-3/H-3WP Speakers, Dual RCA Jacks
S-01S	SPECIAL FUNCTION	Signal Generator Module, 1 kHz Sine Wave, Screw Terminals
S-02S	SPECIAL FUNCTION	Signal Generator Module, Buzzer/Yelp, Screw Terminals
S-04S	SPECIAL FUNCTION	Signal Generator Module, 8 Selectable Tones, Screw Terminals
T-02S	SPECIAL FUNCTION	Line Input Module for Music-on-Hold, Unbalanced, 220k Ω Input, 600 Ω Balanced Output, Screw Terminals

TOA ELECTRONICS, INC.
601 GATEWAY BLVD., SUITE 300
SOUTH SAN FRANCISCO, CA 94080
TEL: 800-733-7088
FAX: 800-733-9766
www.toaelectronics.com

900 SERIES
POWER AMPLIFIERS

900 SERIES MODULE CHART

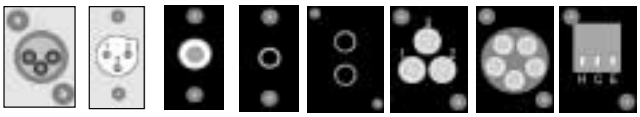

		Female XLR	Male XLR	1/4" Phone Jack	RCA Jack	Dual RCA Jacks	3 Screw Terminals	5 Screw Terminals	Removable Terminal Block
Microphone Input Modules	Standard with high/low cut filters	M-01F	M-01M	M-01P			M-01S		
	Voice Gate with low cut filters	M-51F					M-51S		
	Compressor with high/low cut filters	M-61F					M-61S		
	Remote Volume Control with high/low filters							M-21S	
	For high-Z mic. only w/ high/low cut filters			M-03P					
Line Input Modules*	Standard, no special features	L-01F B-01F U-01F		U-01P	U-01R		L-01S B-01S U-01S		
	Standard with high/low cut filters					U-03R			U-03S
	Remote Volume Control							B-21S U-21S	
	Compressor						U-61S		
Special Function Modules	Line output						T-01S		
	Line input with Music-On-Hold (MOH) output							T-02S	
	1 kHz Sine Wave test tone						S-01S		
	Buzzer/Yelp signal tone						S-02S		
	Switch-selectable tone						S-04S		
	Equalizer for F-121C/CM Speakers					E-03R			
	Equalizer for H-1 Speakers					E-04R			
	Equalizer for H-2/H-2WP Speakers					E-05R			
	Equalizer for H-3/H-3WP Speakers					E-06R			

**For Line Input Modules: Use "B" modules w/ transformer isolation for balanced/unbalanced sources. Use "L" modules only for 600 ohm impedance matching. Use "U" for unbalanced sources w/ short cables (≤ 15 feet).*

Literature Order #: L-P900SERIES
Specifications subject to change without notice.
© 2003, TOA Electronics, Inc.

TOA

OPERATING INSTRUCTIONS

700 SERIES AMPLIFIERS

A-706, A-712, A-724

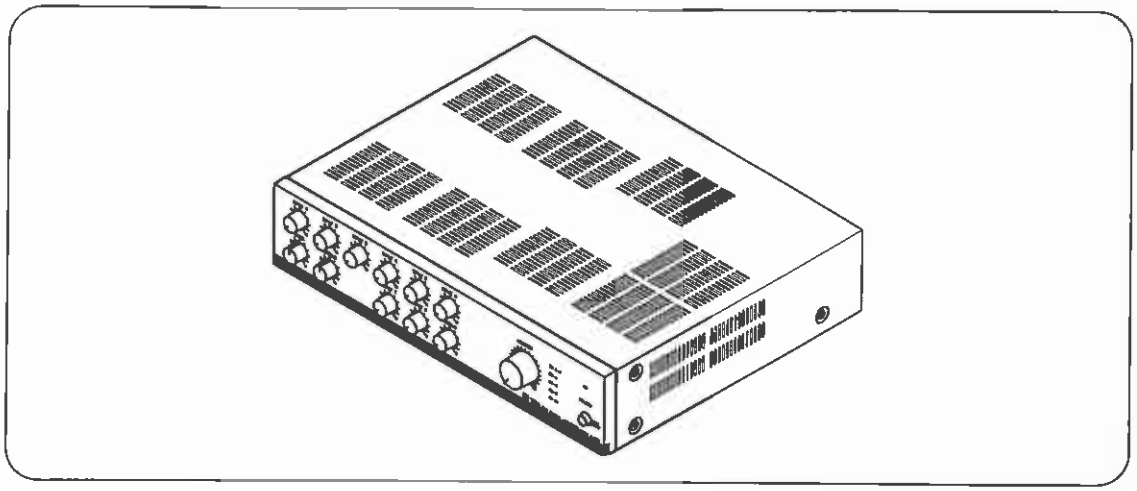

TABLE OF CONTENTS

1. IMPORTANT SAFETY INSTRUCTIONS 2
2. SAFETY PRECAUTIONS 2
3. GENERAL DESCRIPTION 4
4. FEATURES 4
5. NOMENCLATURE AND FUNCTIONS
   - Front 4
   - Rear 5
6. CONNECTIONS
   - 6.1. Speaker Connections 6
   - 6.2. Remote Volume Control Connection 6
   - 6.3. Remote Power ON/OFF Control Connection 7
   - 6.4. Mute Control Connection 7
   - 6.5. External Equipment Connection to the PRE AMP OUT and PWR AMP IN Terminals 7
7. INSTALLATION 7
8. RACK MOUNTING 8
9. CONTROL SETTINGS 8
10. DIMENSIONAL DIAGRAM 8
11. BLOCK DIAGRAM 9
12. SPECIFICATIONS 10
   - Accessories 10
   - Optional products 10

Thank you for purchasing TOA's 700 Series Amplifiers.
Please carefully follow the instructions in this manual to ensure long, trouble-free use of your equipment.

TOA Corporation

1. IMPORTANT SAFETY INSTRUCTIONS

- Read these instructions.
- Keep these instructions.
- Heed all warnings.
- Follow all instructions.
- Do not use this apparatus near water.
- Clean only with dry cloth.
- Do not block any ventilation openings. Install in accordance with the manufacture's instructions.
- Do not install near any heat sources such as radiators, heat registers, stoves, or other apparatus (including amplifiers) that produce heat.
- Do not defeat the safety purpose of the polarized or grounding-type plug. A polarized plug has two blades with one wider than the other. A grounding type plug has two blades and a third grounding prong. The wide blade or the third prong are provided for your safety. If the provided plug does not fit into your outlet, consult an electrician for replacement of the obsolete outlet.
- Protect the power cord from being walked on or pinched particularly at plugs, convenience receptacles, and the point where they exit from the apparatus.
- Only use attachments/accessories specified by the manufacturer.
- Use only with the bracket specified by the manufacturer, or sold with the apparatus.
- Unplug this apparatus during lightning storms or when unused for long periods of time.
- Refer all servicing to qualified service personnel. Servicing is required when the apparatus has been damaged in any way, such as power-supply cord or plug is damaged, liquid has been spilled or objects have fallen into the apparatus, the apparatus has been exposed to rain or moisture, does not operate normally, or has been dropped.

2. SAFETY PRECAUTIONS

The lightning flash with arrowhead symbol, within an equilateral triangle, is intended to alert the user to the presence of uninsulated "dangerous voltage" within the product's enclosure that may be of sufficient magnitude to constitute a risk of electric shock to persons.

The exclamation point within an equilateral triangle is intended to alert the user to the presence of important operating and maintenance (servicing) instructions in the literature accompanying the appliance.

- Before installation or use, be sure to carefully read all the instructions in this section for correct and safe operation.
- Be sure to follow all the precautionary instructions in this section, which contain important warnings and/or cautions regarding safety.
- After reading, keep this manual handy for future reference.

Safety Symbol and Message Conventions

Safety symbols and messages described below are used in this manual to prevent bodily injury and property damage which could result from mishandling. Before operating your product, read this manual first and understand the safety symbols and messages so you are thoroughly aware of the potential safety hazards.

⚠ WARNING

Indicates a potentially hazardous situation which, if mishandled, could result in death or serious personal injury.

When Installing the Unit

- The unit shall not be exposed to dripping or splashing. To reduce the risk of fire or electric shock, do not expose this unit to rain or moisture.
- Use the unit only with the voltage specified on the unit. Using a voltage higher than that which is specified may result in fire or electric shock.
- Do not cut, kink, otherwise damage nor modify the power supply cord. In addition, avoid using the power cord in close proximity to heaters, and never place heavy objects -- including the unit itself -- on the power cord, as doing so may result in fire or electric shock.
- Avoid installing or mounting the unit in unstable locations, such as on a rickety table or a slanted

surface. Doing so may result in the unit falling down, causing personal injury and/or property damage.

When the Unit is in Use

- Should the following irregularity be found during use, immediately switch off the power, disconnect the power supply plug from the AC outlet and contact your nearest TOA dealer. Make no further attempt to operate the unit in this condition as this may cause fire or electric shock.
  - If you detect smoke or a strange smell coming from the unit.
  - If water or any metallic object gets into the unit
  - If the unit falls, or the unit case breaks
  - If the power supply cord is damaged (exposure of the core, disconnection, etc.)
  - If it is malfunctioning (no tone sounds.)

- To prevent a fire or electric shock, never open nor remove the unit case as there are high voltage components inside the unit. Refer all servicing to your nearest TOA dealer.

- No objects filled with liquids, such as vases, shall be placed on the unit. If they accidentally spill into the unit, this may cause a fire or electric shock.

- Do not insert nor drop metallic objects or flammable materials in the ventilation slots of the unit's cover, as this may result in fire or electric shock.

⚠ CAUTION

Indicates a potentially hazardous situation which, if mishandled, could result in moderate or minor personal injury, and/or property damage.

When Installing the Unit

- Never plug in nor remove the power supply plug with wet hands, as doing so may cause electric shock.

- When unplugging the power supply cord, be sure to grasp the power supply plug; never pull on the cord itself. Operating the unit with a damaged power supply cord may cause a fire or electric shock.

- When moving the unit, be sure to remove its power supply cord from the wall outlet. Moving the unit with the power cord connected to the outlet may cause damage to the power cord, resulting in fire or electric shock. When removing the power cord, be sure to hold its plug to pull.

- Avoid installing the unit in humid or dusty locations, in locations exposed to the direct sunlight, near the heaters, or in locations generating sooty smoke or steam as doing otherwise may result in fire or electric shock.

When the Unit is in Use

- Do not place heavy objects on the unit as this may cause it to fall or break which may result in personal injury and/or property damage. In addition, the object itself may fall off and cause injury and/or damage.

- Make sure that the volume control is set to minimum position before power is switched on. Loud noise produced at high volume when power is switched on can impair hearing.

- Do not operate the unit for an extended period of time with the sound distorting. This is an indication of a malfunction, which in turn can cause heat to generate and result in a fire.

- Contact your TOA dealer as to the cleaning. If dust is allowed to accumulate in the unit over a long period of time, a fire or damage to the unit may result.

- If dust accumulates on the power supply plug or in the wall AC outlet, a fire may result. Clean it periodically. In addition, insert the plug in the wall outlet securely.

- Switch off the power, and unplug the power supply plug from the AC outlet for safety purposes when cleaning or leaving the unit unused for 10 days or more. Doing otherwise may cause a fire or electric shock.

An all-pole mains switch with a contact separation of at least 3 mm in each pole shall be incorporated in the electrical installation of the building.

⚠ ATTENTION

L'appareil ne doit pas être exposé aux éclaboussures ou écoulements et tous objets remplis de liquide, tels que vases, ne doivent pas être sur l'appareil.

3. GENERAL DESCRIPTION

Equipped with 6 LINE/MIC selectable inputs, 2 LINE inputs and 1 MODULE input, the A-706, A-712, and A-724 PA amplifiers are designed to suit PA system applications such as announcements, BGM and broadcasting in churches, large rooms and factories.

4. FEATURES

- Power output of 60 W (A-706), 120 W (A-712), and 240 W (A-724).
- Mute Receive function assignable to all inputs, and Mute Send function assignable to Inputs 1 – 3 and Mute input.
- An equalizer or other signal processor connectable between PWR AMP IN and PRE AMP OUT terminals to make fine adjustment of sound.
- Tone controls (bass and treble).
- Output level meter.
- Master volume control for adjusting overall input signal level.
- Microphone gain trims for adjusting MIC level on Inputs 1 – 6.

5. NOMENCLATURE AND FUNCTIONS

[Front]

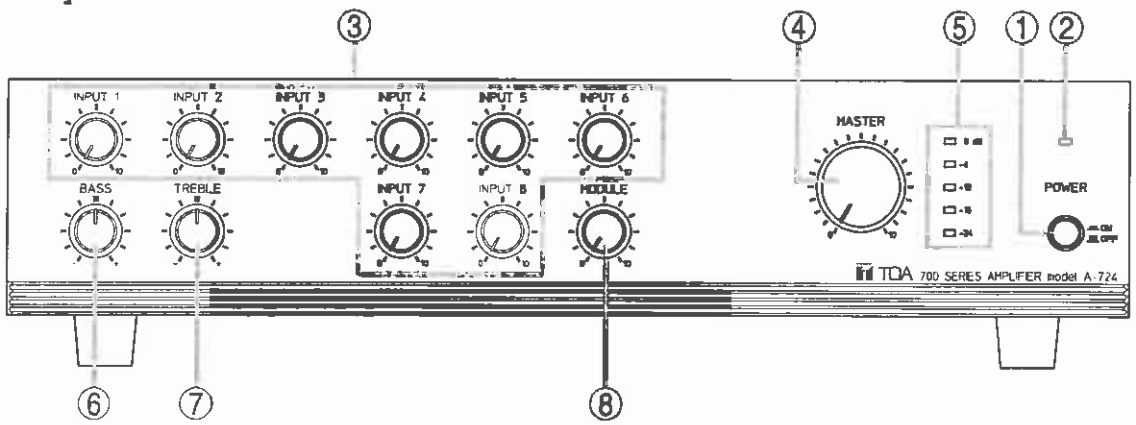

This figure represents the A-724.

1. **Power switch [POWER]**
   Press to turn ON the power.
   Press again to turn the power OFF.

2. **Power indicator**
   Lights green when the power is switched on.

3. **Input 1 – 8 volume controls [INPUT 1 – 8]**
   Adjust the corresponding input signal levels. Turn each control clockwise to increase and counterclockwise to decrease the level.

4. **Master volume control [MASTER]**
   Adjusts the overall signal level. Turn the control clockwise to increase and counterclockwise to decrease the level.

5. **LED level meter**
   Indicates an output level.

6. **Bass control [BASS]**
   Adjusts bass response. Turn clockwise to increase bass output, and counterclockwise to decrease it. The center position provides flat characteristics.

7. **Treble control [TREBLE]**
   Adjusts treble response. Turn clockwise to increase treble output, and counterclockwise to decrease it. The center position provides flat characteristics.

8. **Module input volume control [MODULE]**
   Adjusts the signal level of the module input on the rear panel. Turn the control clockwise to increase and counterclockwise to decrease the level.

[Rear]

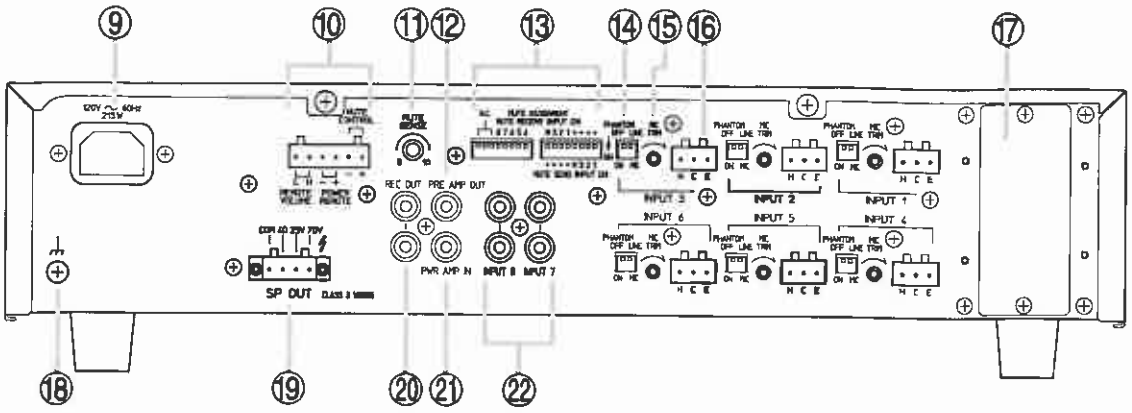

This figure represents the A-724.

9. AC inlet
Connect the supplied power cord.

10. Remote control connector
Removable terminal block.

(1) Remote volume control terminals
[REMOTE VOLUME]
Connecting a 10 kΩ linear taper volume control across these terminals will allow remote control of preamplifier output and speaker output levels.

(2) Power remote control terminals
[POWER REMOTE]
Allows remote control of the unit's power ON/OFF.
No-voltage make contact input.

(3) Mute control terminals [MUTE CONTROL]
Shorting these terminals mutes the Mute Receive inputs (the inputs set to be muted).
The mute control works regardless of whether or not there is a signal to a Mute Send input (the input set to activate muting).

11. Mute sensitivity control [MUTE SENSE]
Adjusts the threshold level in a range of 36 dB for the Mute Send inputs to activate the mute function. Turn clockwise to increase the threshold level (lower sensitivity), and counterclockwise to decrease the level (higher sensitivity).

12. Preamplifier output jack [PRE AMP OUT]
0 dB, 600 Ω, unbalanced RCA jack. Outputs all input signals. Connects to a signal processor such as a limiter or equalizer. (Refer to p. 7.)

13. Mute assignment switches
[MUTE ASSIGNMENT]
Assign the individual inputs to Mute Receive (inputs to be muted) or Mute Send (inputs to activate muting) function. When a signal enters a Mute Send input, Mute Receive inputs are all muted.

Note
Avoid assigning both functions to the same input.

(1) Mute Receive assignment switches
[MUTE RECEIVE (INPUT CH)]
Allow all inputs (INPUT 1 – 8 and Module) to be assigned to Mute Receive function.

(2) Mute Send assignment switches
[MUTE SEND (INPUT CH)]
Allow the inputs 1 – 3 and Module input to be assigned to Mute Send function.

14. Function switches

(1) Phantom power ON/OFF switch
[PHANTOM ON, OFF]
Turns on or off the phantom power for the corresponding input. This switch is valid only when the LINE/MIC selector switch is set to the MIC position.

(2) LINE/MIC selector switch [LINE, MIC]
Selects the input sensitivity of LINE or MIC as follows:
LINE: –10 dB
MIC: –70 to –50 dB, adjustable with the Microphone gain trimmer (15).

15. Microphone gain trims [MIC TRIM]
Adjust the microphone input gain for the inputs set to MIC.

16. Input 1 – 6 connectors [INPUT 1 – 6]
–10 dB (LINE) or –70 to –50 dB (MIC) selectable, 600 Ω, balanced, removable terminal blocks.
Either LINE or MIC level can be selected by the Function switch (14).
When MIC level is selected, the input sensitivity can be adjusted from –70 to –50 dB with the Microphone gain trim (15).
The inputs 2 and 3, which are electronically balanced, can be converted into transformer-balanced type by using optional transformers IT-455.

17. Module input slot
Accepts TOA's 900 series module.

18. Functional ground terminal
Hum noise may be generated when external equipment is connected to the unit. Connecting this terminal to the functional ground terminal of the external equipment may reduce the hum noise.

Note: This terminal is not for protective earth.

19. Speaker output terminals [SP OUT]
4 Ω, 25 V and 70 V outputs, removable terminal block. Connects to speakers.

20. Recording output jacks [REC OUT]
0 dB, 600 Ω, unbalanced RCA jacks. Output all input signals before they enter the master volume control. Connect a cassette deck, etc. when recording the broadcast contents.

21. Power amplifier input jack [PWR AMP IN]
0 dB, 600 Ω, unbalanced RCA jack. Accepts output signals from the signal processor connected to the Preamplifier output jack (12). (Refer to p. 7.)
Inserting an RCA plug disconnects the internal power amplifier section from the preamplifier section.

22. Input 7 and 8 jacks [INPUT 7, 8]
–10 dB, 10 kΩ, unbalanced RCA jacks. Accept output signals from external equipment.

6. CONNECTIONS

6.1. Speaker Connections

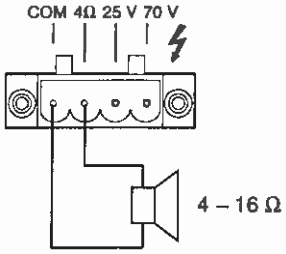

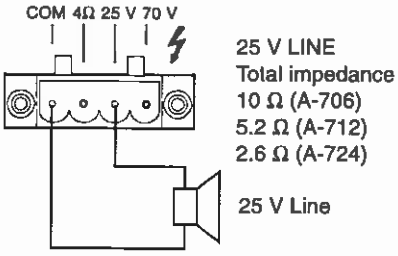

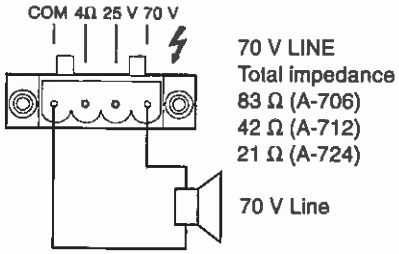

Notes
- Do not use both the 4 Ω, 25 V and 70 V terminals at the same time.
- Impedances indicated in the figures represent the total speaker system (load) impedances.

6.2. Remote Volume Control Connection

The external volume control can remotely adjust the signal level at post-master volume control.
When performing the remote volume control, adjust the master volume control in advance noting that its setting limits the maximum signal level adjustable with the volume control. Be sure to avoid turning fully down the master volume control.

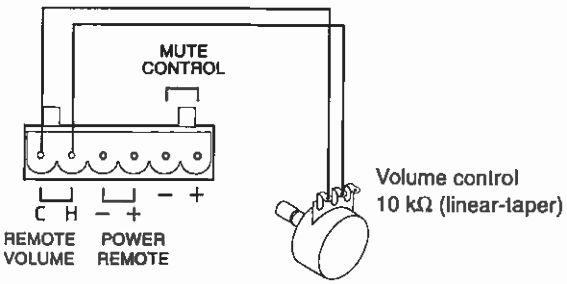

6.3. Remote Power ON/OFF Control Connection

To perform this control, be sure to turn the power switch OFF.
Shorting the power remote control terminals turns the power on, and opening them turns the power off.
With the power switch ON, the power on/off cannot be remotely controlled.

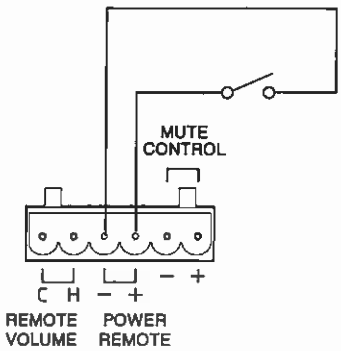

6.4. Mute Control Connection

Shorting the mute control terminals mutes the Mute Receive inputs (the inputs set to be muted).

Note
The mute control works regardless of whether or not there is a signal to a Mute Send input (the input set to activate muting).

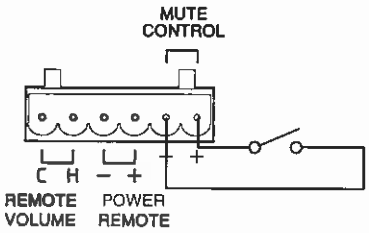

6.5. External Equipment Connection to the PRE AMP OUT and PWR AMP IN Terminals

By connecting a signal processor such as an equalizer or limiter between the preamplifier section (PRE AMP OUT) and the power amplifier section (PWR AMP IN) of the A-700 series, signals can be tailored for desired sound output.

Note
Inserting an RCA plug into the PWR AMP IN terminal disconnects the internal power amplifier section from the preamplifier section.

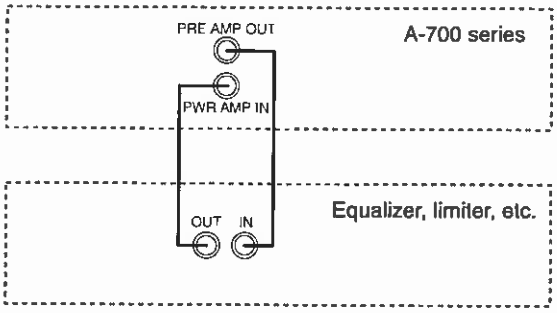

7. INSTALLATION

To prevent the internal temperature rise, keep the unit at least 10 cm away from objects that may obstruct air flow.

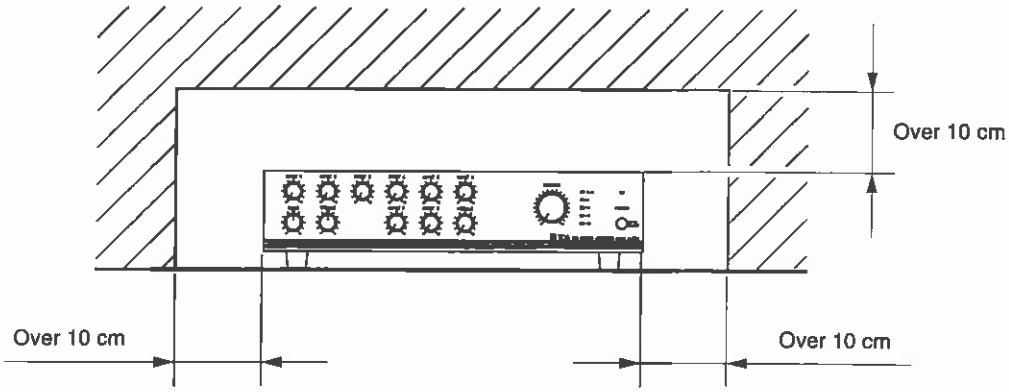

8. RACK MOUNTING

To mount the unit in a standard 19" equipment rack, use the optional MB-25B Rack Mounting Bracket. Attach the MB-25B to the unit using the supplied 4 screws. When using other screws, each screw must be shorter than 16 mm.

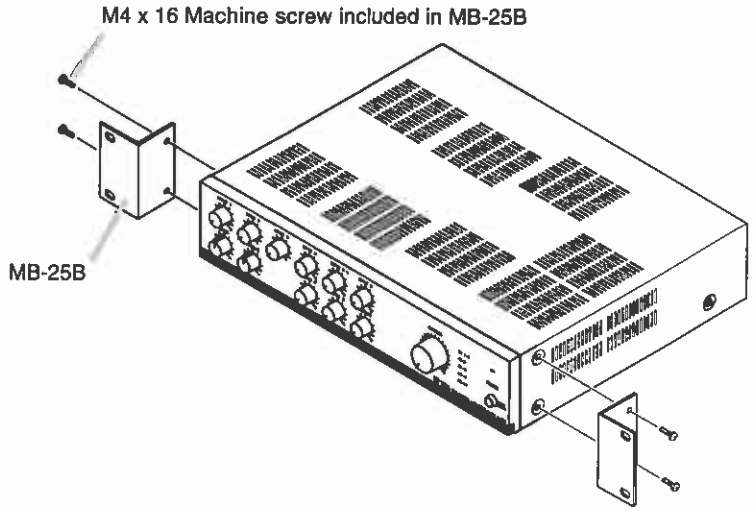

9. CONTROL SETTINGS

Output levels are adjustable with individual volume controls. For music play or announcements, adjust the corresponding volume control so that the red indicator doesn't light. Note that the sound quality is downgraded when the red indicator remains lit.
To prevent the accidental change of the settings of input volume and tone (Bass and Treble) controls, remove their knobs after setting them to the desired position and attach the supplied or optional YA-920 Volume Control Covers instead.

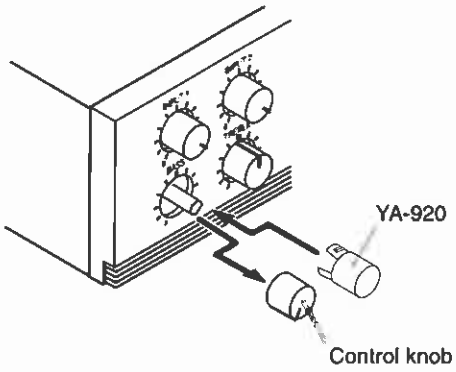

10. DIMENSIONAL DIAGRAM (Applicable to all models)

Unit: mm

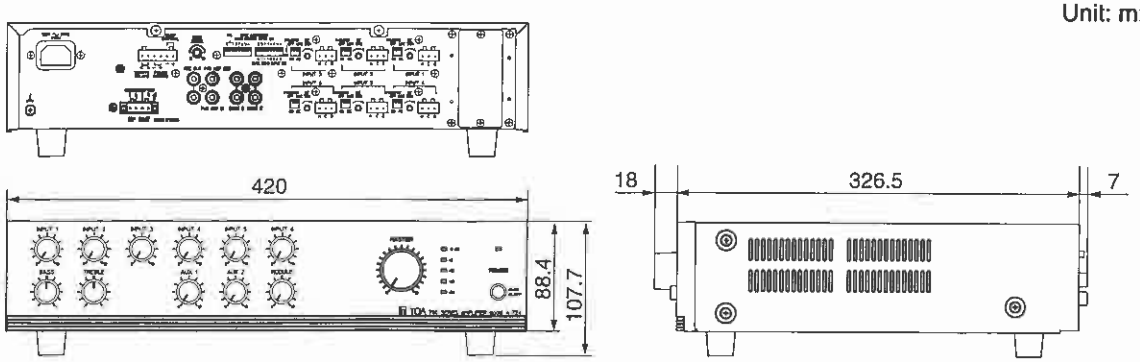

This figure represents the A-724.

11. BLOCK DIAGRAM

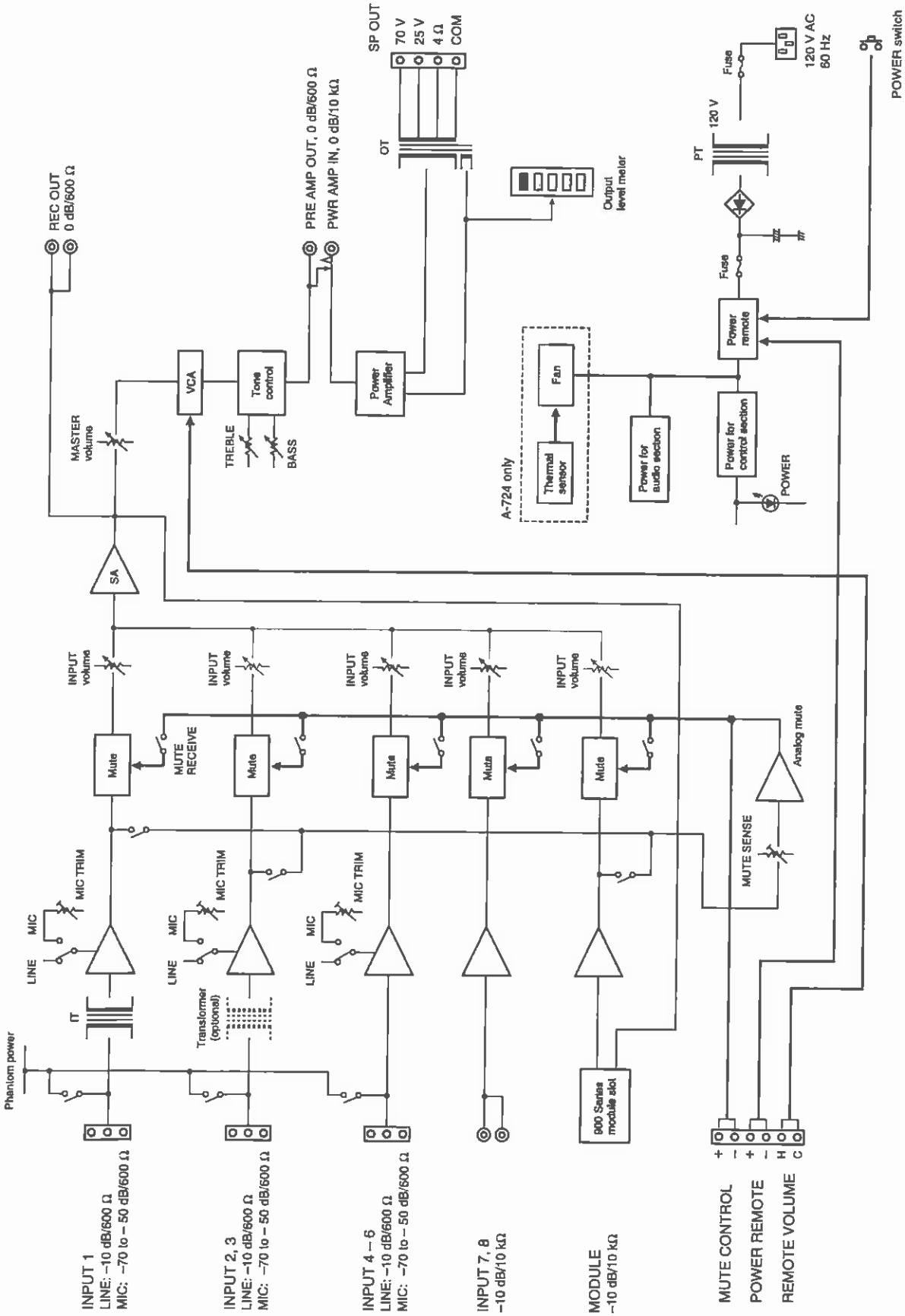

12. SPECIFICATIONS

[A-706]

Power Source	120 V AC, 60 Hz
Rated Output	60 W
Power/Current Consumption	155 W (rated output), 68 W (based on UL60065), under 250 mA (when power switch is OFF)
Frequency Response	50 – 20,000 Hz (±3 dB)
Distortion	Under 2% at 1 kHz, rated power
Input	INPUT 1 – 6: –70 to –50 dB*, 600 Ω (MIC)/–10 dB*, 600 Ω (LINE) INPUT 1: Transformer-balanced, removable terminal block (3 pins) INPUT 2 – 6: Electronically-balanced, removable terminal block (3 pins) **Note:** Each of INPUT 2 and 3 can be converted into transformer-balanced type by using an optional transformer IT-455. INPUT 7 – 8 (LINE): –10 dB*, 10 kΩ, unbalanced, RCA jack MODULE: –10 dB*, 10 kΩ PWR AMP IN: 0 dB*, 10 kΩ, unbalanced, RCA jack (An equalizer or other signal processor connectable between PRE AMP OUT and PWR AMP IN terminals)
Output	REC OUT: 0 dB*, 600 Ω, unbalanced, RCA jack PRE AMP OUT: 0 dB*, 600 Ω, unbalanced, RCA jack SPEAKER OUT: 70 V line (83 Ω), 25 V line (10 Ω), and 4 – 16 Ω, removable terminal block (4 pins)
Phantom Power (+23 V DC)	ON or OFF for each INPUT 1 – 6 (MIC input) with switch setting
S/N Ratio (Band pass: 20 – 20,000 Hz)	Over 55 dB (INPUT 1 – 6, mic trim volume: max., 600 Ω terminated) Over 70 dB (INPUT 1 – 6, mic trim volume: min., 600 Ω terminated) Over 76 dB (Master volume: max.) Over 90 dB (All input volume: min.)
Tone Control	Bass: ±10 dB at 100 Hz, Treble: ±10 dB at 10 kHz
Control Input	REMOTE VOLUME: Removable terminal block POWER REMOTE: No-voltage make contact input, removable terminal block, Open voltage: Under 14 V DC, Short-circuit: Under 0.5 mA MUTE CONTROL: No-voltage make contact input, removable terminal block, Open voltage: Under 17 V DC, Short-circuit: Under 1.5 mA
Indicator	5-point LED output level meter, Power indicator LED
Operating Temperature	–10°C to +40°C
Finish	Panel: ABS resin, black, hair line Case: Steel plate, black
Dimensions	420 (w) x 107.7 (h) x 351.5 (d) mm
Weight	9.5 kg

* 0 dB = 1 V

Note: The design and specifications are subject to change without notice for improvement.

• Accessories

AC power cord (2 m) 1
Removable terminal plug (4 pins) 1
Removable terminal plug (6 pins) 1
Removable terminal plug (3 pins) 6
Volume control cover YA-920 4

• Optional products

Input transformer: IT-455
Available as a service part with the order code 114-03-120-40.
Additionally needed is the insulating sheet also available as a service part with 131-27-700-90.

Rack mounting bracket: MB-25B
Volume control cover: YA-920
900 series module

[A-712]

Power Source	120 V AC, 60 Hz
Rated Output	120 W
Power/Current Consumption	285 W (rated output), 110 W (based on UL60065), under 400 mA (when power switch is OFF)
Frequency Response	50 – 20,000 Hz (±3 dB)
Distortion	Under 2% at 1 kHz, rated power
Input	INPUT 1 – 6: –70 to –50 dB*, 600 Ω (MIC)/–10 dB*, 600 Ω (LINE) INPUT 1: Transformer-balanced, removable terminal block (3 pins) INPUT 2 – 6: Electronically-balanced, removable terminal block (3 pins) **Note:** Each of INPUT 2 and 3 can be converted into transformer-balanced type by using an optional transformer IT-455. INPUT 7 – 8 (LINE): –10 dB*, 10 kΩ, unbalanced, RCA jack MODULE: –10 dB*, 10 kΩ PWR AMP IN: 0 dB*, 10 kΩ, unbalanced, RCA jack (An equalizer or other signal processor connectable between PRE AMP OUT and PWR AMP IN terminals)
Output	REC OUT: 0 dB*, 600 Ω, unbalanced, RCA jack PRE AMP OUT: 0 dB*, 600 Ω, unbalanced, RCA jack SPEAKER OUT: 70 V line (42 Ω), 25 V line (5.2 Ω), and 4 – 16 Ω, removable terminal block (4 pins)
Phantom Power (+23 V DC)	ON or OFF for each INPUT 1 – 6 (MIC input) with switch setting
S/N Ratio (Band pass: 20 – 20,000 Hz)	Over 55 dB (INPUT 1 – 6, mic trim volume: max., 600 Ω terminated) Over 70 dB (INPUT 1 – 6, mic trim volume: min., 600 Ω terminated) Over 76 dB (Master volume: max.) Over 90 dB (All input volume: min.)
Tone Control	Bass: ±10 dB at 100 Hz, Treble: ±10 dB at 10 kHz
Control Input	REMOTE VOLUME: Removable terminal block POWER REMOTE: No-voltage make contact input, removable terminal block, Open voltage: Under 14 V DC, Short-circuit: Under 0.5 mA MUTE CONTROL: No-voltage make contact input, removable terminal block, Open voltage: Under 17 V DC, Short-circuit: Under 1.5 mA
Indicator	5-point LED output level meter, Power indicator LED
Operating Temperature	–10°C to +40°C
Finish	Panel: ABS resin, black, hair line Case: Steel plate, black
Dimensions	420 (w) x 107.7 (h) x 351.5 (d) mm
Weight	12 kg

* 0 dB = 1 V

Note: The design and specifications are subject to change without notice for improvement.

• Accessories

AC power cord (2 m) 1
Removable terminal plug (4 pins) 1
Removable terminal plug (6 pins) 1
Removable terminal plug (3 pins) 6
Volume control cover YA-920 4

• Optional products

Input transformer: IT-455
Available as a service part with the order code 114-03-120-40.
Additionally needed is the insulating sheet also available as a service part with 131-27-700-90.

Rack mounting bracket: MB-25B
Volume control cover: YA-920
900 series module

[A-724]

Power Source	120 V AC, 60 Hz
Rated Output	240 W
Power/Current Consumption	565 W (rated output), 215 W (based on UL60065), under 60 mA (when power switch is OFF)
Frequency Response	50 – 20,000 Hz (±3 dB)
Distortion	Under 2% at 1 kHz, rated power
Input	INPUT 1 – 6: –70 to –50 dB*, 600 Ω (MIC)/–10 dB*, 600 Ω (LINE) INPUT 1: Transformer-balanced, removable terminal block (3 pins) INPUT 2 – 6: Electronically-balanced, removable terminal block (3 pins) **Note:** Each of INPUT 2 and 3 can be converted into transformer-balanced type by using an optional transformer IT-455. INPUT 7 – 8 (LINE): –10 dB*, 10 kΩ, unbalanced, RCA jack MODULE: –10 dB*, 10 kΩ PWR AMP IN: 0 dB*, 10 kΩ, unbalanced, RCA jack (An equalizer or other signal processor connectable between PRE AMP OUT and PWR AMP IN terminals)
Output	REC OUT: 0 dB*, 600 Ω, unbalanced, RCA jack PRE AMP OUT: 0 dB*, 600 Ω, unbalanced, RCA jack SPEAKER OUT: 70 V line (21 Ω), 25 V line (2.6 Ω), and 4 – 16 Ω, removable terminal block (4 pins)
Phantom Power (+23 V DC)	ON or OFF for each INPUT 1 – 6 (MIC input) with switch setting
S/N Ratio (Band pass: 20 – 20,000 Hz)	Over 55 dB (INPUT 1 – 6, mic trim volume: max., 600 Ω terminated) Over 70 dB (INPUT 1 – 6, mic trim volume: min., 600 Ω terminated) Over 76 dB (Master volume: max.) Over 90 dB (All input volume: min.)
Tone Control	Bass: ±10 dB at 100 Hz, Treble: ±10 dB at 10 kHz
Control Input	REMOTE VOLUME: Removable terminal block POWER REMOTE: No-voltage make contact input, removable terminal block, Open voltage: Under 14 V DC, Short-circuit: Under 0.5 mA MUTE CONTROL: No-voltage make contact input, removable terminal block, Open voltage: Under 17 V DC, Short-circuit: Under 1.5 mA
Indicator	5-point LED output level meter, Power indicator LED
Operating Temperature	–10°C to +40°C
Finish	Panel: ABS resin, black, hair line Case: Steel plate, black
Dimensions	420 (w) x 107.7 (h) x 351.5 (d) mm
Weight	13.5 kg

* 0 dB = 1 V

Note: The design and specifications are subject to change without notice for improvement.

• Accessories

AC power cord (2 m) 1
Removable terminal plug (4 pins) 1
Removable terminal plug (6 pins) 1
Removable terminal plug (3 pins) 6
Volume control cover YA-920 4

• Optional products

Input transformer: IT-455
Available as a service part with the order code 114-03-120-40.
Additionally needed is the insulating sheet also available as a service part with 131-27-700-90.

Rack mounting bracket: MB-25B
Volume control cover: YA-920
900 series module

TOA

700 SERIES

MIXER/ AMPLIFIERS:

A-706
A-712
A-724

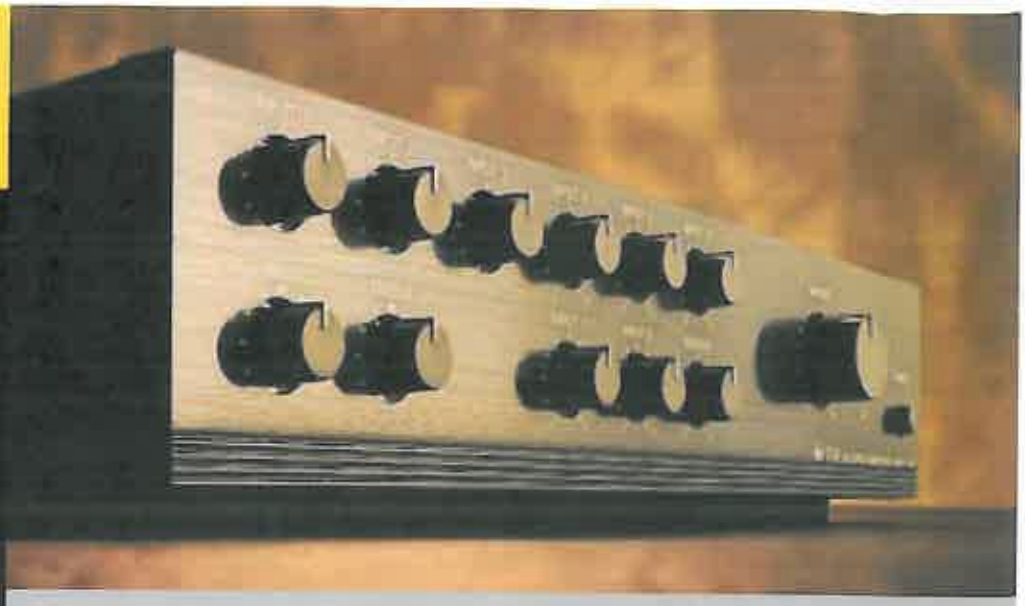

TOA 700 SERIES MIXER/AMPLIFIERS offer versatile features and outstanding value for installed sound applications such as boardrooms, educational facilities, houses of worship and many others.

The 700 Series model lineup includes the **A-706** (60 W), **A-712** (120 W), and **A-724** (240 W); all manufactured with proven TOA quality and reliability. Features include six mic/line inputs, two auxiliary line inputs and a 900 Series module port. Each mic/line input includes a mic trim control and 23 VDC phantom power. Speaker outputs consist of 70.7 V, 25 V and 4 ohm. An auxiliary line output can be used for recording or connection to an external booster amplifier.

An Auto-Mute function provides voice-activated priority override. You can assign inputs to activate or respond to the muting function with rear panel DIP switches. Muting can also be activated with an external switch-closure.

Other features include channel and master volume controls, bass/treble, processor insert jacks and output level meter. Master volume and power on/off can also be controlled remotely. Short-circuit and thermal protection circuitry ensures extended operation. Optional accessories include the MB-25B rack-mount kit and YA-920 volume control security knob.

The 700 Series is UL and cUL listed with competitive pricing and a five-year warranty.

HIGHLIGHTS

- **Nine Channel Integrated Mixer/Amplifiers** for paging and background/foreground music distribution
- **Proven TOA Quality and Reliability** with wide frequency response, very low noise and distortion, and excellent output regulation
- **Three Models:**
  A-706 (60 W)
  A-712 (120 W)
  A-724 (240 W)
- **Six Mic/Line Inputs**, balanced, with mic trim, 23 VDC phantom power and removable terminal block connector
- **Two Auxiliary Inputs**, unbalanced, with dual-RCA jacks for convenient connection of stereo sources
- **Module Slot** accepts 900 Series plug-in modules with additional features
- **Transformer-Isolation for Telephone Paging Applications** (Input #1)
- **25 V, 70.7 V and 4 Ohm Speaker Outputs** with removable terminal block connector
- **Auto-Mute Priority Function** assignable via external switches
  - Channels 1-3 and Module configurable as Mute Send
  - Channels 1-8 and Module configurable as Mute Receive
- **Auto-Mute SENSE Control** for adjusting mute activation threshold
- **External Mute Terminals** for activating mute function with external switch-closure
- **Individual Channel and Master Volume Controls**
- **Bass/Treble Tone Controls**
- **Output Level Meter and Power Indicator**
- **Remote Master Volume** controlled with an external 10k ohm linear-taper potentiometer
- **Auxiliary Output** for connecting an external amplifier or recording device
- **Pre-amp. Out / Power Amp. In Insert Jacks** for connecting external signal processors
- **Remote AC Turn-On** for activating power with an external switch-closure
- **Turn-On Delay** disconnects output during power-up
- **Over-current and Thermal Protection Circuitry** prevents potential damage from overloads, short-circuit and overheating
- **Detachable IEC-type AC Power Cord**
- **Volume Control Security Knobs Included (4)**
- **Optional Rack-Mount Kit**, model **MB-25B** (2 RU)
- **UL / cUL Listed**
- **Five Year Warranty**

OPTIONAL ACCESSORIES

Plug-in Modules (see back page)

MB-25B	Rack-mount Kit (2 RU)
PF-511	Perforated Rack Panel (1 RU)
YA-920	Volume Control Security Knob
IT-455	Input Transformer (channels 2 and 3)

SPECIFICATIONS

700 SERIES
MIXER/AMPLIFIERS

Tel: 800-733-7088
Fax: 800-733-9766
www.toaelectronics.com

TOA

Type	Nine channel mixer/amplifier
Output Power	A-706: 60 W RMS, A-712: 120 W RMS, A-724: 240 W RMS
Frequency Response	50 - 20k Hz (±3 dB)
Total Harmonic Distortion	0.5% at 1k Hz, rated output
Inputs	Input 1 - 6: Mic -70 to -50 dBV, 600 Ω/Line -10 dBV, 600 Ω Input 1: transformer-balanced, Phoenix 3P terminal Input 2-6: electronically-balanced, Phoenix 3P terminal Input 7 - 8: Line -20 dBV, 10k Ω, unbalanced RCA pin jack (stereo-sum) Module: Specifications dependent on module type Power IN: 0 dBV, 10k Ω, unbalanced, RCA pin jack
Outputs	Speaker OUT: 70.7 V line, 25 V line, and 4 - 16 Ω, Phoenix 4P terminal Minimum Impedance: 70.7 V line: 83 Ω (A-706), 42 Ω (A-712), 21 Ω (A-724) 25 V line: 10 Ω (A-706), 5.2 Ω (A-712), 2.6 Ω (A-724) Preamp OUT: 0 dBV, 600 Ω, unbalanced, RCA pin jack Rec OUT: 0 dBV, 600 Ω, unbalanced, RCA pin jack
Output Regulation	Less than 2 dB, no load to full load
Phantom Power	23 VDC, switchable, Inputs 1 - 6
Module Slot	Card edge connector connects to audio input and output points of TOA 900 Series modules. Use of Mute-type modules is not required in 700 Series models.
Dynamic Range	Input 1 - 6: >70 dB Input 7 - 8, Module: >80 dB (Band Pass: 20 Hz - 20k Hz, with Tone Controls centered)
Tone Control	Bass: ±10 dB at 100 Hz, Treble: ±10 dB at 10k Hz
Control Input	Remote Volume: 10k Ω linear-taper potentiometer, Phoenix terminal Power Remote: No-voltage make contact input Open voltage: 28 VDC (when unit power is OFF) Short-circuit: Under 10 mA, Phoenix terminal Mute Control: No-voltage make contact input Open voltage: 28 VDC (when unit power is OFF) Short-circuit: Under 10 mA, Phoenix terminal
Indicator	5-point LED output level meter. Power Indicator LED
Power Source	120 VAC, 60 Hz
Power Consumption (Based on UL/CSA standard)	A-706: 68 W, A-712: 110 W, A-724: 215 W
Operating Temperature	14° F to 104° F (-10° C to + 40° C)
Finish	Panel: ABS resin, black, hair line Case: Steel plate, black
Dimensions (W x H x D)	16.8" x 4.3" x 14.68" (420 x 107.7 x 367 mm)
Weight	A-706: 20.55 lbs (9.3 kg), A-712: 27.85 lbs (12.6 kg), A-724: 29.84 lbs (13.5 kg)
Accessories (included)	4 x Volume Control Security Knobs: YA-920

APPLICATIONS

Airports
Audio/Visual
Auditoriums / Theatres
Banks
Bars / Lounges / Nightclubs
Boardrooms
Business Music
Conference Facilities
Convenience Stores
Educational Facilities
Fitness Clubs / Gymnasiums
Hotels / Hospitality
Houses of Worship
Industrial / Warehouses
Museums
Music Distribution
Offices
Public Address
Restaurants
Retail Stores
Theme Parks
Training Rooms

700 SERIES
MIXER/AMPLIFIERS

Tel: 800-733-7088
Fax: 800-733-9766
www.toaelectronics.com

SPECIFICATIONS

DIMENSIONAL DRAWING

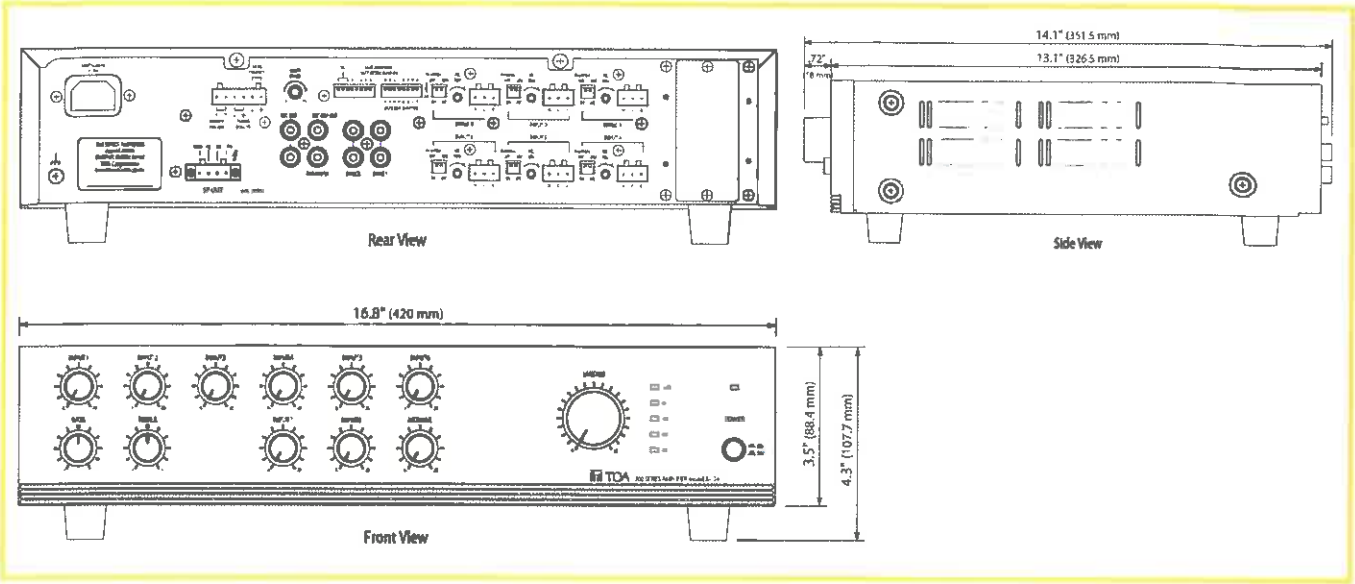

BLOCK DIAGRAM

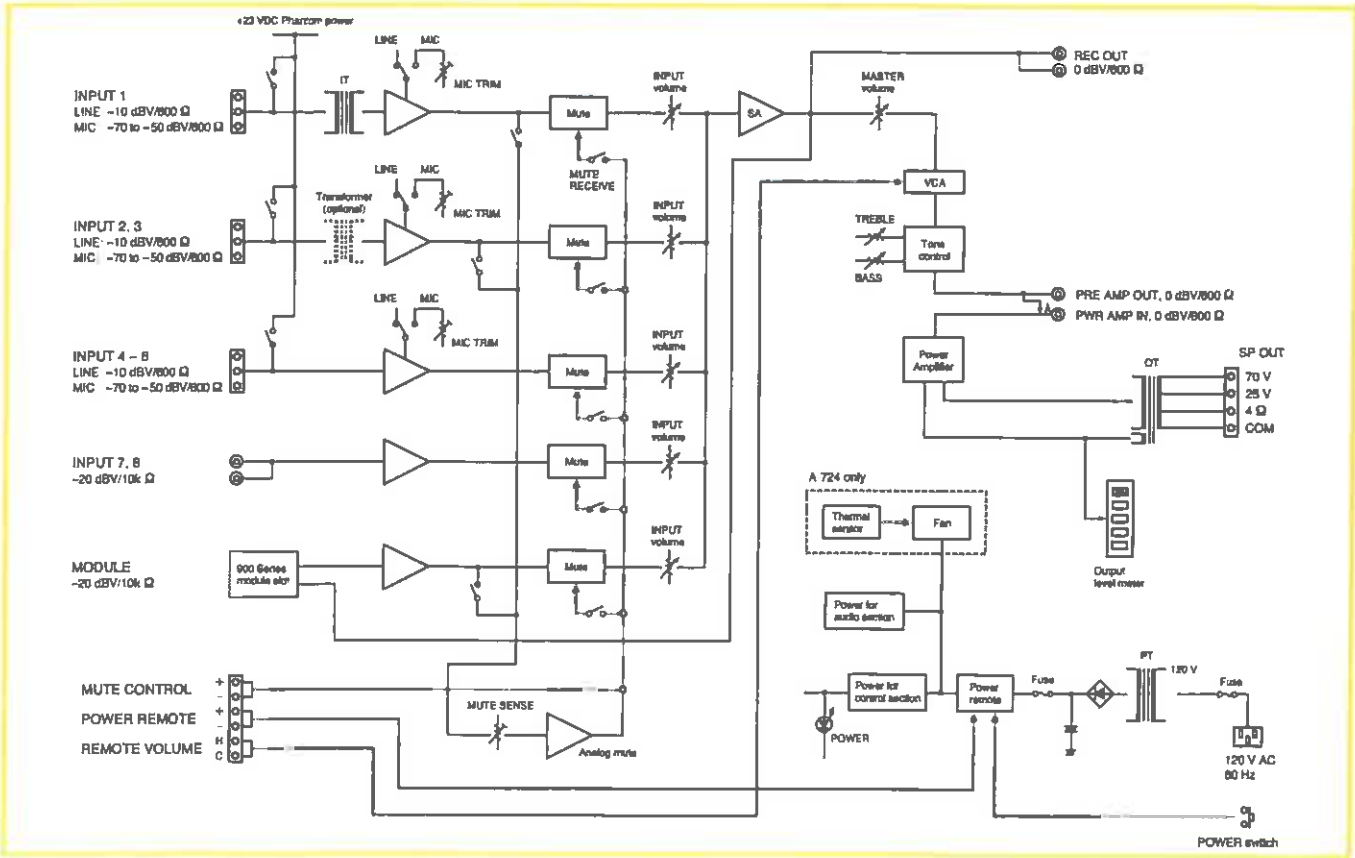

TOA ELECTRONICS, INC.
601 GATEWAY BLVD., SUITE 300
SOUTH SAN FRANCISCO, CA 94080
TEL: 800-733-7088
FAX: 800-733-9766
www.toaelectronics.com

700 SERIES

MIXER/AMPLIFIERS

MODULE SELECTION CHART

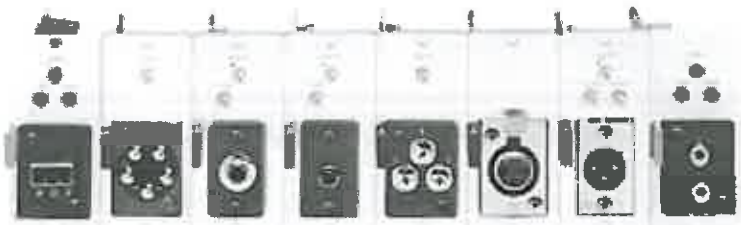

	Model	Description
Microphone Input Modules	M-01F	Microphone Input Module, Balanced, 200 Ω, Lo/Hi-Cut Filters, Female XLR
	M-01M	Same as M-01F with Male XLR
	M-01P	Same as M-01F with Phone Jack
	M-01S	Same as M-01F with Removable Terminal Block
	M-03P	Microphone Input Module, HiZ, Unbalanced, 50k Ω, Lo/Hi-Cut Filters, Phone Jack
	M-21S	Microphone Input Module, Balanced, 200 Ω, Lo/Hi-Cut Filters, Remote Vol. Control, Screw Terminals
	M-51F	Microphone Input Module, Balanced, 200 Ω, Lo-Cut Filter, Voice Gate, Female XLR
	M-51S	Same as M-51F with Removable Terminal Block
	M-61F	Microphone Input Module, Balanced, 200 Ω, Lo/Hi-Cut Filters, Compressor, Female XLR
	M-61S	Same as M-61F with Removable Terminal Block
Line Input Modules*	B-01F	Balanced Line Input Module, 10k Ω Transformer, Female XLR
	B-01S	Balanced Line Input Module, 10k Ω Transformer, Removable Terminal Block
	B-21S	Balanced Line Input Module, 10k Ω Transformer, Remote Volume Control, Screw Terminals
	L-01F	Line Matching Input Module, 600 Ω Transformer, Balanced, Female XLR
	L-01S	Same as L-01F with Removable Terminal Block
	U-01F	Line Input Module, Unbalanced, 220k Ω, Female XLR
	U-01P	Same as U-01F with Phone Jack
	U-01R	Same as U-01F with RCA Jack
	U-01S	Same as U-01F with Removable Terminal Block
	U-03R	Stereo Line Input Module, Lo/Hi-Cut Filters, Stereo Summing Dual RCA Jacks
	U-03S	Line Input Module, Lo/Hi-Cut Filters, Removable Terminal Block
	U-14R	Dual Input Priority Module w/ AGC, Stereo Summing Dual RCA Jacks ***NEW!***
	U-21S	Line Input Module, Unbalanced, 220k Ω, Remote Volume Control, Screw Terminals
	U-61S	Line Input Module, Unbalanced, 220k Ω, Compressor, Removable Terminal Block
Special Function Modules	E-03R	900 Series Processor Module for F-121C/CM Speakers, Dual RCA Jacks
	E-04R	900 Series Processor Module for H-1 Speakers, Dual RCA Jacks
	E-05R	900 Series Processor Module for H-2/H-2WP Speakers, Dual RCA Jacks
	E-06R	900 Series Processor Module for H-3/H-3WP Speakers, Dual RCA Jacks
	E-07S	900 Series Low Pass Filter Output Module for FB-100 and HB-1, Removable Terminal Block
	S-01S	Signal Generator Module, 1 kHz Sine Wave, Removable Terminal Block
	S-02S	Signal Generator Module, Buzzer/Yelp, Removable Terminal Block
	S-04S	Signal Generator Module, 8 Selectable Tones, Removable Terminal Block
	S-20S	Digital Message/Tone Module w/ USB, Removable Terminal Block ***NEW!***
	T-01S	Line Output Module, Balanced, 600 Ω, Removable Terminal Block
	T-02S	Line Input Module for Music-on-Hold, Unbalanced, 220k Ω Input, 600 Ω Balanced Output, Screw Terminals
	V-01S	Remote Master Volume Control (VCA) Module, Removable Terminal Block ***NEW!***

** For Line Input Modules: Use "B" modules w/ transformer isolation for balanced/unbalanced sources. Use "L" modules only for 600 ohm impedance matching. Use "U" for unbalanced sources w/ short cables (≤ 15 feet).*

Visit www.toaelectronics.com to download:

Specification Sheets
Architect and Engineering Specifications
900 Series Module Guide
Installation Manual
CAD Files
High-resolution Images

Literature Order #: L-700SERIES
Specifications subject to change without notice.
© 2004, TOA Electronics, Inc.

CS Series

Wide-Range Paging Speakers

UL LISTED

TOA CS SERIES WIDE-RANGE PAGING SPEAKERS are ideal for indoor and outdoor commercial sound system applications for voice paging, background music and tone signaling distribution. Compared to traditional metal paging horns, CS Series speakers offer wider frequency range and superior sound quality.

CS Series models include standard and UL listed models: CS-64/U (6 W), CS-154/U (15 W) and CS-304/U (30 W). Each includes a built-in 70.7V/100 V transformer with screwdriver-adjustable power taps. All CS models are fully weather-resistant to withstand demanding environmental conditions with a sealed enclosure, full-range moisture-resistant cone speaker, stainless-steel mounting hardware and a protective mesh grille. The enclosure is also coated with polyurethane resin paint to resist the fading effects of prolonged exposure to ultraviolet light.

The CS Series Wide-Range Paging Speakers are backed with a five year warranty.

TOA

Highlights

- **Wide-Range Paging Speakers** for voice paging, background music and tone signaling distribution
- **Weather-Resistant** to withstand demanding environmental conditions
- **UL Listed Models** UL 1480 (UEAY, outdoor use)
- **Choose from Six Models:**
  CS-64 (6 W)
  CS-64U (6 W) UL Listed
  CS-154 (15 W)
  CS-154U (15 W) UL Listed
  CS-304 (30 W)
  CS-304U (30 W) UL Listed
- **Constant Directivity Coverage** (CS-154/U and CS-304/U)
- **High Sensitivity:** up to 98 dB (1 W/1 m)
- **Moisture-Resistant Speaker Component (4.72")**
- **Built-In 70.7 V/100 V Transformer** with screwdriver-adjustable power taps
- **Lightweight, Sealed Enclosure** prevents moisture damage
- **Cable Strain-Relief**
- **Polyurethane Resin Paint** resists the fading effects of ultraviolet light
- **IEC IP-64 Standards Compliant** for dust and moisture-resistance
- **Wide Temperature Range** -4° F to 131° F
- **Stainless-Steel Mounting Bracket** for easy installation and aiming in wall, pole or ceiling-mount applications
- **Protective Stainless-Steel Mesh Grille** prevents speaker damage
- **Five Year Warranty**

Applications

- **Boats**
- **Churches**
- **Industrial**
- **Mobile Vehicles**
- **Parking Facilities**
- **Parks**
- **Schools**
- **Security**
- **Sporting Facilities**
- **Swimming Pools**

SPECIFICATIONS

Tel: 800-733-7088
Fax: 800-733-9766
www.toaelectronics.com

TOA

Enclosure Type	Wide-Range Paging Speaker
Dispersion	**CS-64/U:** Exponential **CS-154/U/304/U:** Constant Directivity
Speaker Component	Cone-Type Dynamic Speaker, 4.72" (12 cm) (Treated For Weather-Resistance)
Power Handling	**CS-64/U:** 6 W **CS-154/U:** 15 W **CS-304/U:** 30 W
Transformer Taps / Rated Impedance	**CS-64/U: 70.7 V:** 6 W (830 Ω), 3 W (1.7 kΩ), 1.5 W (3.3 kΩ), 0.5 W (10 kΩ) **100 V:** 6 W (1.7 kΩ), 3 W (3.3 kΩ), 1 W (10 kΩ) **CS-154/U: 70.7 V:** 15 W (330 Ω), 7.5 W (670 Ω), 2.5 W (2 kΩ) **100 V:** 15 W (670 Ω), 10 W (1 kΩ), 5 W (2 kΩ) **CS-304/U: 70.7 V:** 30 W (170 Ω), 15 W (330 Ω), 10 W (500 Ω), 5 W (1 kΩ) **100 V:** 30 W (330 Ω), 20 W (500 Ω), 10 W (1 kΩ)
Sensitivity (Sound Pressure Level) (1 W / 1 m)	**CS-64/U:** 96 dB **CS-154/U:** 97 dB **CS-304/U:** 98 dB
Frequency Response	**CS-64/U:** 130 Hz - 13 kHz **CS-154/U:** 150 Hz - 15 kHz **CS-304/U:** 120 Hz - 15 kHz
Dispersion (-6 dB, 2 kHz)	**CS-64/U:** 100° H x 100° V **CS-154/U:** 110° H x 85° V **CS-304/U:** 100° H x 85° V
UL Listed Category	UL 1480 (UEAY, outdoor use)
IEC IP Code	IP-64
Temperature Range	-4° F to +131° F (-20° C to +55° C)
Material/Finish	**Enclosure:** Fire-Resistant ABS Resin, Polyurethane Resin Paint, Off-White **CS-64/U Net:** Punched, Surface Treated Steel Plate, Dark Gray Powder Coating **CS-154/U/304/U Net:** Aluminum, Gray Paint **Bracket/Screws:** Stainless Steel
Dimensions (W x H x D)	**CS-64/U:** 9.17" x 8.82" x 8.19" (233 mm x 224 mm x 208 mm) **CS-154/U/304/U:** 14.40" x 9.06" x 10.71" (366 mm x 230 mm x 272 mm)
Weight	**CS-64/U:** 3.31 lbs. (1.5 kg) **CS-154/U:** 6.17 lbs. (2.8 kg) **CS-304/U:** 6.83 lbs. (3.1 kg)

DIMENSIONAL DRAWINGS

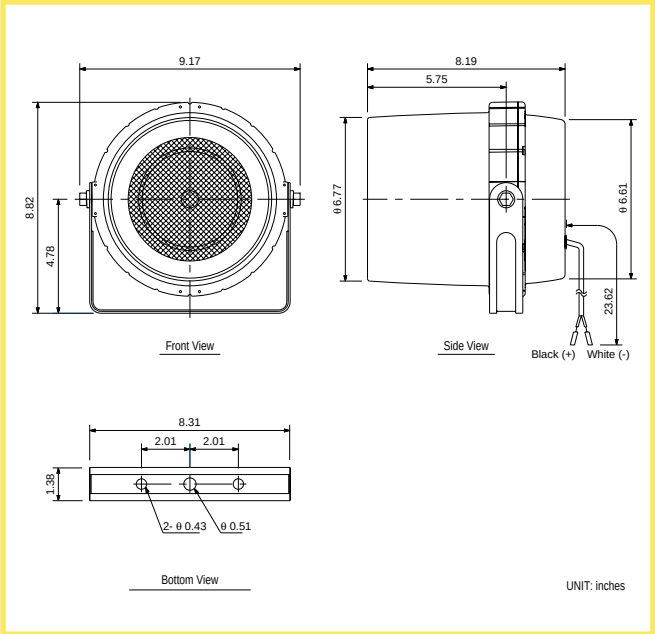

CS-64/U

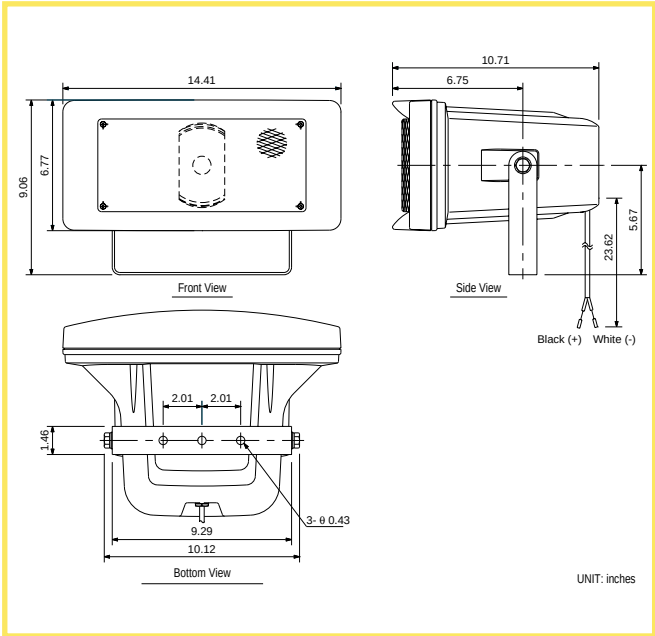

CS-154/ U/CS-304/U

SPECIFICATIONS

Tel: 800-733-7088
Fax: 800-733-9766
www.toaelectronics.com

TOA

CS-64/U

Frequency Response

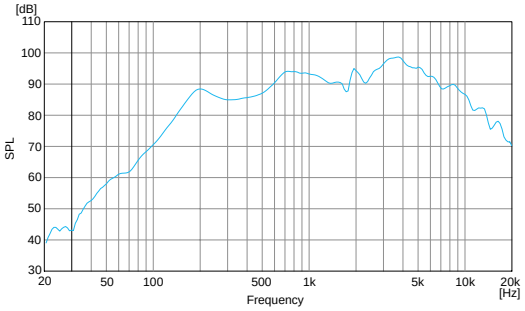

Beamwidth

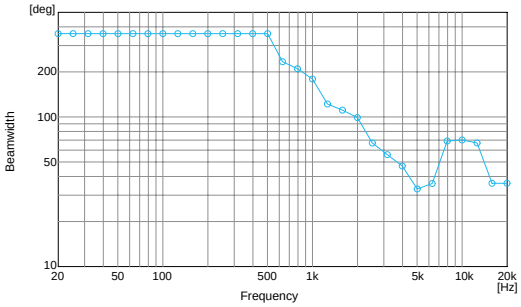

Directivity Factor

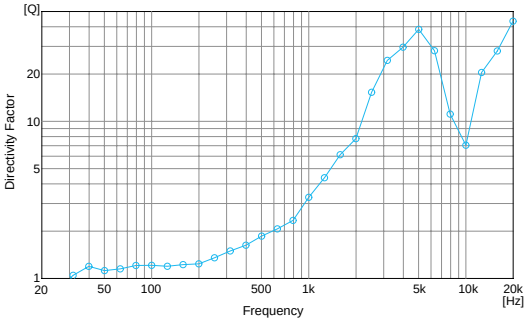

Polar Response

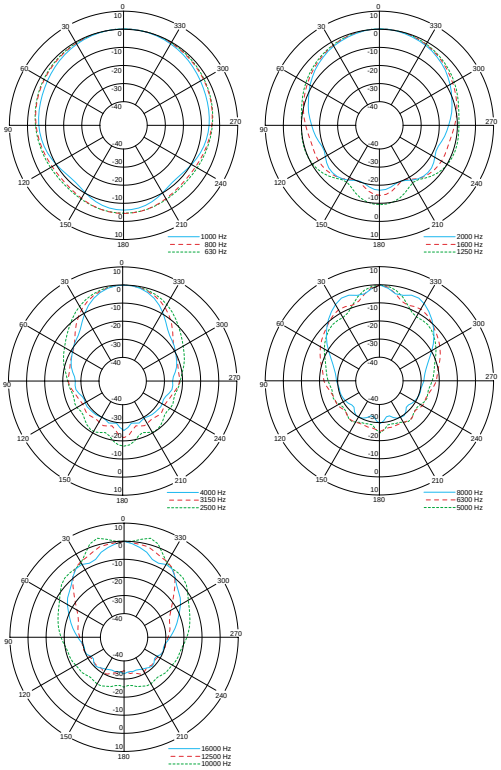

SPECIFICATIONS

Tel: 800-733-7088
Fax: 800-733-9766
www.toaelectronics.com

TOA

CS-154/U

Frequency Response

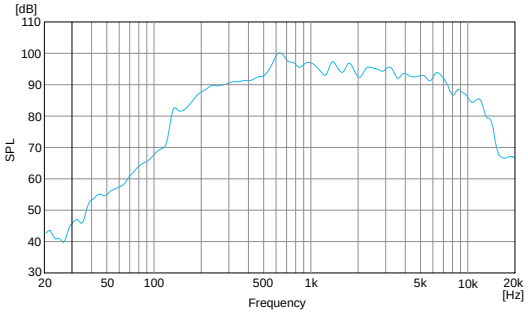

Beamwidth

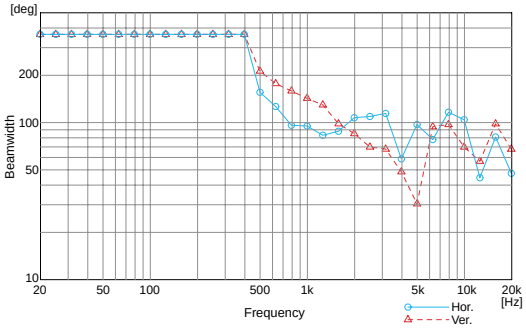

Directivity Factor

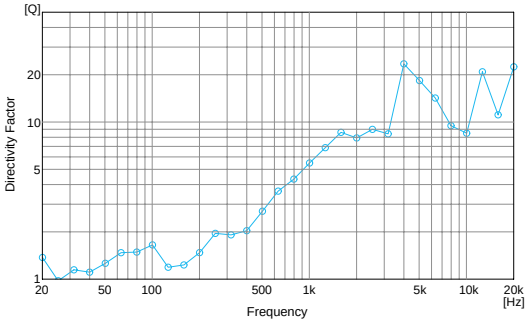

Polar Response

Horizontal

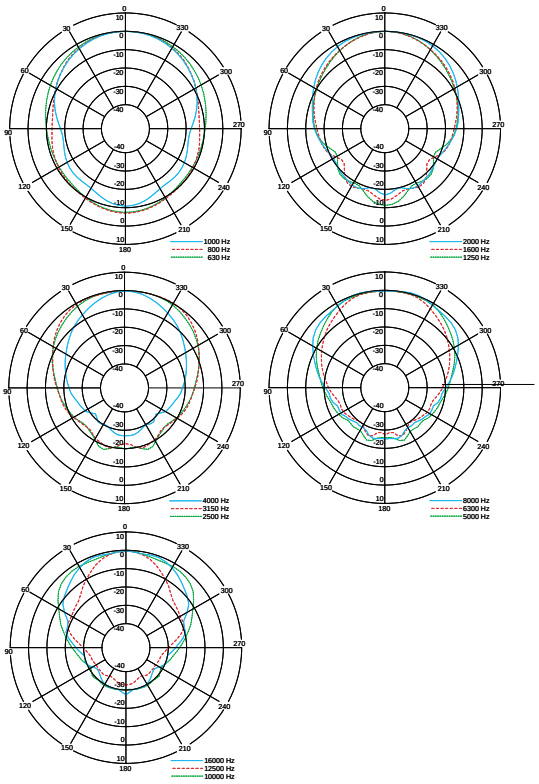

Vertical

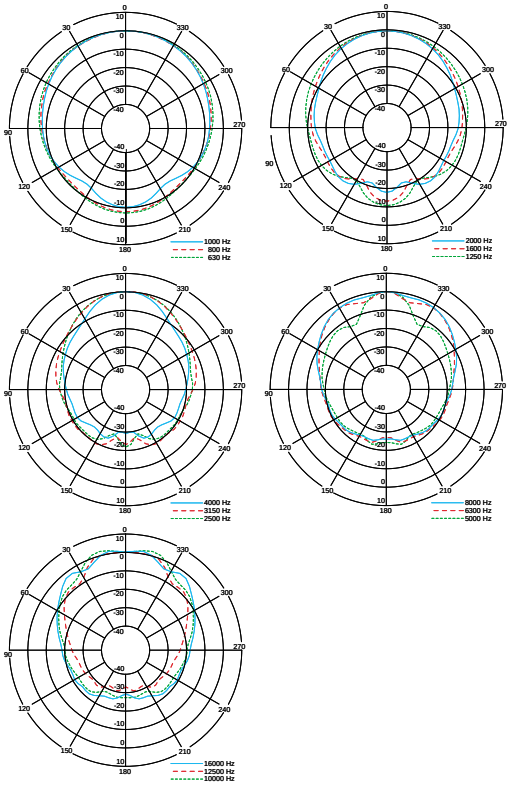

SPECIFICATIONS

Tel: 800-733-7088
Fax: 800-733-9766
www.toaelectronics.com

TOA

CS-304/U

Frequency Response

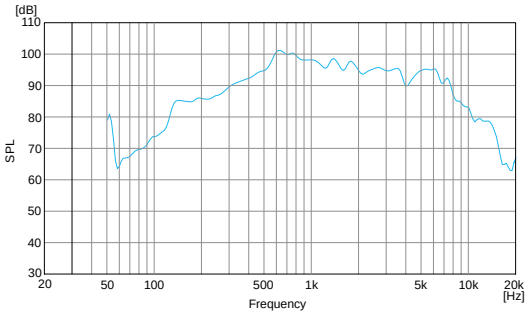

Beamwidth

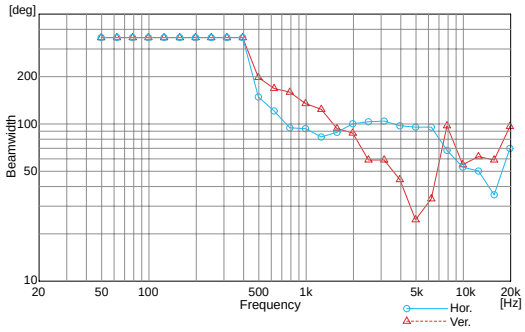

Directivity Factor

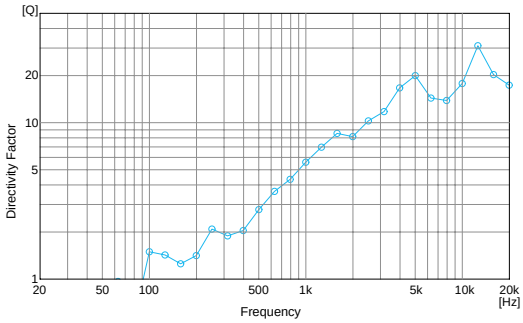

Polar Response

Horizontal

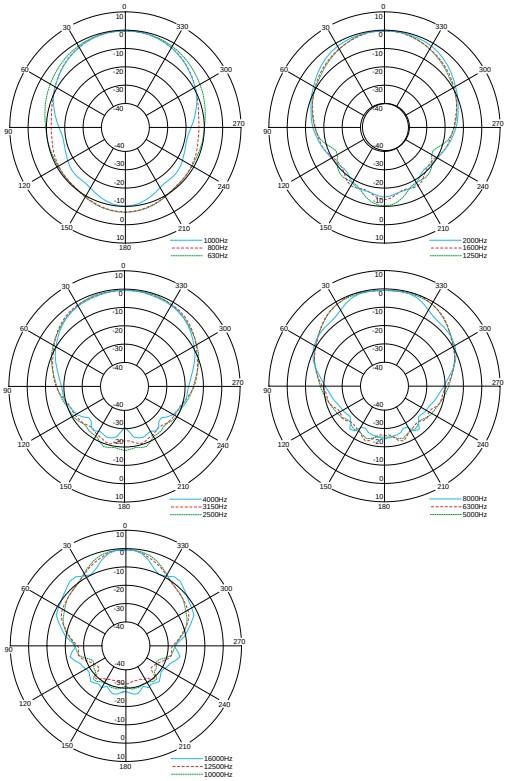

Vertical

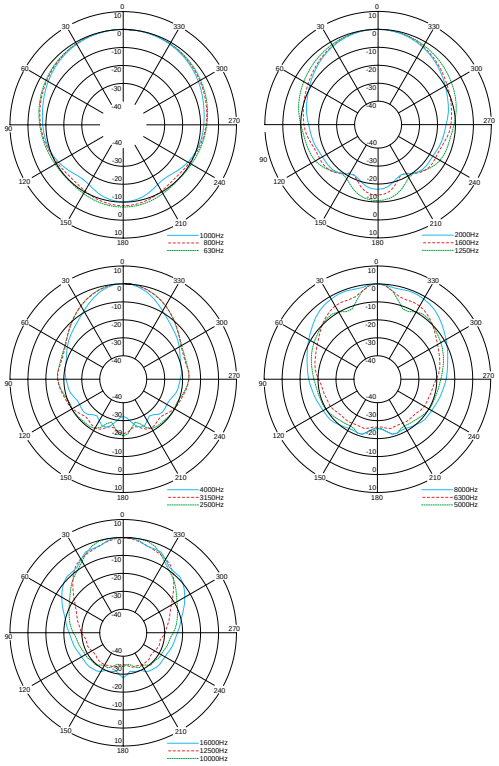

SPECIFICATIONS

Tel: 800-733-7088
Fax: 800-733-9766
www.toaelectronics.com

TOA

ARCHITECT'S & ENGINEER'S SPECIFICATIONS

The wide-range paging speaker shall be CS-154/U/304/U: constant directivity; CS-64/U: exponential, direct radiator design suitable for paging, background music and tone signaling distribution. The speaker component shall be a 4.72" (12 cm) cone-type dynamic speaker, treated for weather-resistance. Power handling shall be CS-64/U: 6 W; CS-154/U: 15 W; CS-304/U: 30 W. The paging speaker shall include a matching transformer to accommodate 70.7 V and 100 V lines. Transformer wattage taps shall include CS-64/U: 70.7 V: 6 W (830 ohms), 3 W (1.7 kohms), 1.5 W (3.3 kohms), 0.5 W (10 kohms), 100 V: 6 W (1.7 kohms), 3 W (3.3 kohms), 1 W (10 kohms); CS-154/U: 70.7 V: 15 W (330 ohms), 7.5 W (670 ohms), 2.5 W (2 kohms), 100 V: 15 W (670 ohms), 10 W (1 kohms), 5 W (2 kohms); CS-304/U: 70.7 V: 30 W (170 ohms), 15 W (330 ohms), 10 W (500 ohms), 5 W (1 kohms), 100 V: 30 W (330 ohms), 20 W (500 ohms), 10 W (1 kohms). Sound pressure level measured at one meter with one watt of power applied shall be CS-64/U: 96 dB SPL; CS-154/U: 97 dB SPL; CS-304/U: 98 dB SPL. Frequency response shall be CS-64/U: 130 Hz - 13 kHz; CS-154/U: 150 Hz - 15 kHz; CS-304/U: 120 Hz - 15 kHz. Horizontal and vertical dispersion at -6 dB below the on-axis reference at 2 kHz shall be CS-64/U: 100° H x 100° V; CS-154/U: 110° H x 85° V; CS-304/U: 100° H x 85° V.

The paging speaker shall be UL Listed under category UL 1480 and include external "UL Listed" labeling. The paging speaker shall comply with the IEC IP-64 standard for dust and moisture-resistance and operate within a temperature range from -4° F to 131° F (-20° C to +55° C) . The material and finish of the horn/cover shall be fire-resistant ABS resin and coated with polyurethane resin paint, off-white in color, to resist long-term exposure to ultraviolet light. The speaker shall include a protective net/grille to prevent damage and the material and finish shall be CS-154/U/304/U: punched, surface treated steel plate, dark gray powder coating and CS-64/U: aluminum, gray paint. All mounting hardware, including screws and bolts, shall be stainless steel. The paging horn shall include an integral speaker cable, insulated polyvinyl chloride type, with strain-relief, 0.24" (6 mm) diameter and 24" (600 mm) length. Dimensions shall be CS-64/U: 9.17" W x 8.82" H x 8.19" D (233 mm x 224 mm x 208 mm); CS-154/U/304/U: 14.40" W x 9.06" H x 10.71" D (366 mm x 230 mm x 272 mm). Weight shall be CS-64/U: 3.31 lbs. (1.5 kg); CS-154/U: 6.17 lbs. (2.8 kg); CS-304/U: 6.83 lbs. (3.1 kg).

The wide-range paging speaker shall be the TOA CS-64/CS-64U/CS-154/CS-154U/CS-304/CS-304U.

TOA Electronics, Inc.

601 Gateway Boulevard
Suite 300
South San Francisco, CA 94080

Tel: 800-733-7088 Fax: 800-733-9766

www.toaelectronics.com

TOA Canada Corp.

Tel: 905-564-3570 Fax: 905-564-3569

Literature Order #: L-CS
Specifications subject to change without notice.
© 2004 TOA Electronics, Inc.

TOA

INSTRUCTION MANUAL

WIDE RANGE SPEAKER CS-154U

Thank you for purchasing TOA's Wide Range Speaker.
Please carefully follow the instructions in this manual in order to ensure long, trouble-free use of your equipment.

1. SAFETY PRECAUTIONS

- Before installation or use, be sure to carefully read all the instructions in this section for correct and safe operation.
- Be sure to follow all the precautionary instructions in this section, which contain important warnings and/or cautions regarding safety.
- After reading, keep this manual handy for future reference.

⚠ WARNING Indicates a potentially hazardous situation which, if mishandled, could result in death or serious personal injury.

- Install the speaker only in a location that can structurally support the weight of the speaker and the mounting bracket. Doing otherwise may result in the speaker falling down and causing personal injury and/or property damage.
- Do not stand or sit on, nor hang down from the speaker as this may cause it to drop, resulting in personal injury and/or property damage.

⚠ CAUTION Indicates a potentially hazardous situation which, if mishandled, could result in moderate or minor personal injury, and/or property damage.

- Do not operate the speaker for an extended period of time with the sound distorting. This is an indication of a malfunction, which in turn can cause heat to generate and result in a fire.

2. GENERAL DESCRIPTION AND FEATURES

TOA's CS-154U outdoor speaker features a resin enclosure and stainless steel hardware for all-weather durability. It is designed to offer the weather resistance and high efficiency of horn speakers combined with the high sound quality of cone speakers. The CS-154U also employs a constant directivity horn for clear sound output over the limited horizontal range of dispersion.

3. APPEARANCE AND DIMENSIONS

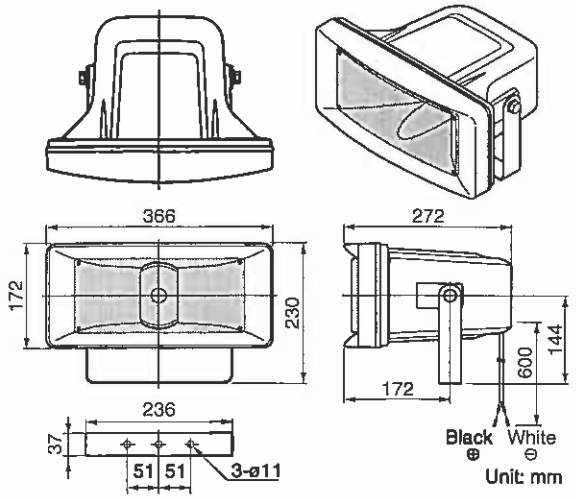

4. WIRING DIAGRAM

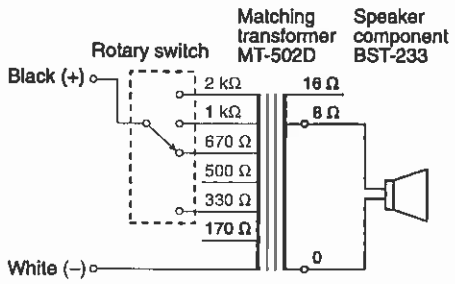

Note
The rotary switch is factory-preset to 670 Ω.

TOA Corporation

5. IMPEDANCE CHANGE

The input impedance is factory-preset to 670 Ω. To change the impedance, change the rear panel-mounted rotary switch position to the desired impedance (wattage) using a standard screwdriver.

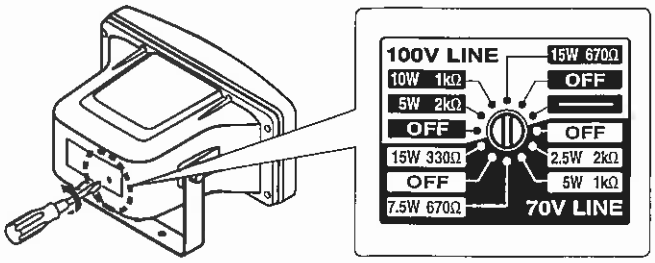

Notes

- This speaker is designed to operate on a 70 V or 100 V line. Do not connect it to the amplifier's low impedance line.
- No sound is output when the switch is set to the OFF position.

Caution

Never set the switch to "—" position for 100 V line operation, as doing so may result in damage to the speaker.

Line Voltage		Imp.
70 V	100 V	
15 W	–	330 Ω
7.5 W	15 W	670 Ω
5 W	10 W	1 kΩ
2.5 W	5 W	2 kΩ

← Factory-preset values

6. CONNECTION

Make the connections using marrets (wire nuts) inside a UL Listed junction box.

Note

This product shall be installed in accordance with the National Electrical Code, ANSI/NFPA 70.

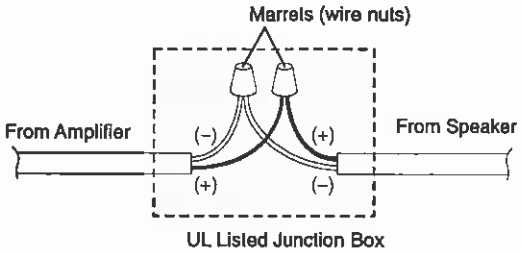

7. INSTALLATION

[Mounting under the eaves or on the ceiling]

[Mounting on the wall]

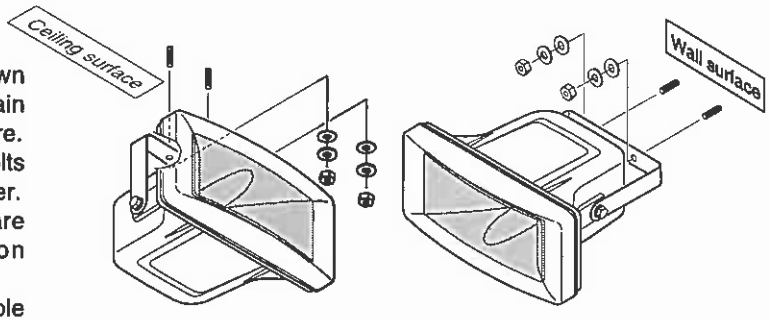

- Be sure to direct the speaker down towards the ground. Otherwise, rain floods the speaker, causing its failure.
- No mounting hardware such as bolts and nuts is supplied with the speaker. Use commercial mounting hardware appropriate for the installation environment.
- Please install only with either flexible conduit or flexible wiring.

8. SPECIFICATIONS

Speaker Component		12 cm cone speaker
Rated Input		15 W
Impedance		(330 Ω)*, 670 Ω, 1 kΩ, 2 kΩ
Frequency Response		150 – 15,000 Hz
Sensitivity		97 dB (1 W, 1 m)
Finish	Body	ABS resin, off-white, paint
	Bracket	Stainless steel
	Net	Aluminum, gray, paint
Dimensions		366 (w) x 230 (h) x 272 (d) mm
Weight		2.8 kg

* Impedance for 70 V line

Note

The design and specifications are subject to change without notice for improvement.

TOA Corporation

Printed in Indonesia
533-06-111-60

TOA

Operating Instructions

TOA 900 SERIES II
POWER AMPLIFIER

P-906MK2
P-912MK2
P-924MK2

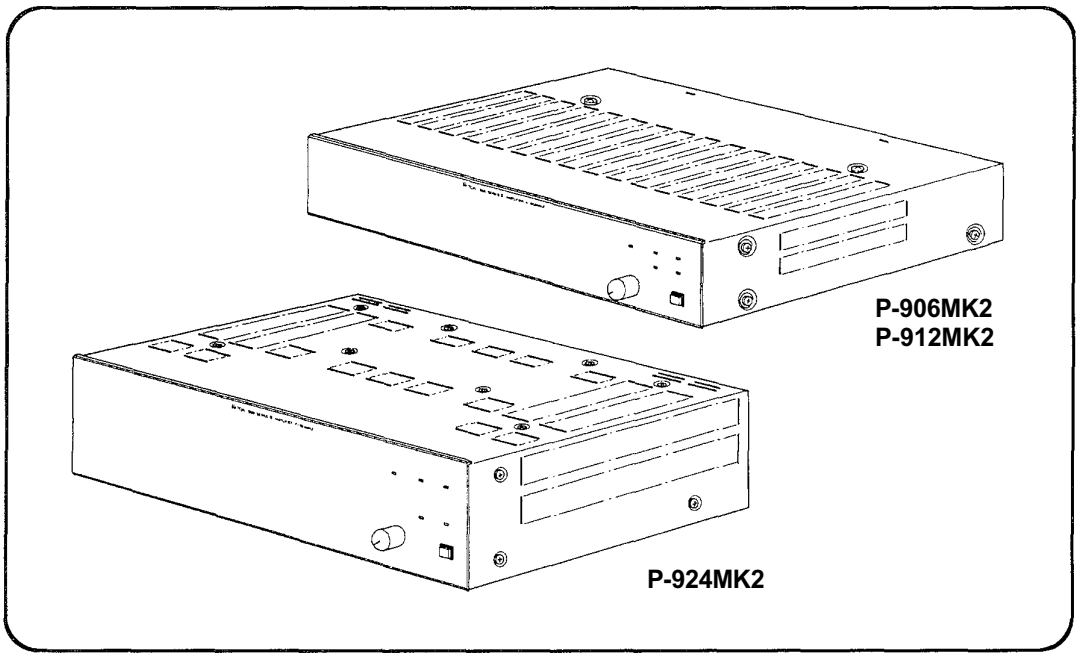

CAUTION

RISK OF ELECTRIC SHOCK
DO NOT OPEN

TO REDUCE THE RISK OF ELECTRICAL SHOCK, DO NOT REMOVE COVER.
NO USER SERVICEABLE PARTS INSIDE.
REFER SERVICING TO QUALIFIED SERVICE PERSONNEL.

THE LIGHTNING FLASH WITH ARROWHEAD WITHIN A TRIANGLE IS INTENDED TO TELL THE USER THAT PARTS INSIDE THE PRODUCT ARE A RISK OF ELECTRIC SHOCK TO PERSONS.

THE EXCLAMATION POINT WITHIN A TRIANGLE IS INTENDED TO TELL THE USER THAT IMPORTANT OPERATING AND SERVICING INSTRUCTIONS ARE IN THE PAPERS WITH THE APPLIANCE.

Please follow the instructions in this manual to obtain the optimum results from this unit.
We also recommend that you keep this manual handy for future reference.

TOA Corporation

■ Contents

General description 2
Features 2
Nomenclature
  Front panel 3
  Rear panel 4
Input connections 5
Output connections 6
Rack mounting 7
Operation 8
Volume adjustment 8
Installation 8
Servicing 8
Specifications 9
Appearance (P-906MK2/P-912MK2) 10
Appearance (P-924MK2) 11

■ General Description

The TOA P-906MK2, P-912MK2 and P-924MK2 Power Amplifiers deliver up to 60 watts, 120 watts and 240 watts of power respectively at less than 0.5% total harmonic distortion (THD) from 20 to 20,000 Hz (transformerless 4-ohm output). The power amplifiers have a high-impedance direct input and an input port (edge connector) to accept one plug-in module. Module selection is determined by application among the TOA plug-in modules.

The power amplifiers have a low-cut switch for a cutoff frequency of 60 Hz, and an input-level switch for input sensitivity of 1V (0 dBV) or 100mV (–20 dBV). Output terminals provide connections for 4-ohm and 8-ohm speakers, plus 25-volt and 70-volt speaker distribution outlets. With plug-in modules, the power amplifiers may be used as a PA amplifier.

The power amplifiers can be rack mounted by using optional rack mounting bracket MB-25B(P-906MK2, P-912MK2) and MB-35B(P-924MK2). The optional perforated panel PF-511 provides suitable ventilation, finished in color to match the power amplifiers.

■ Features

1. Wide frequency response : 20 ~ 20,000 Hz ± 1 dB
2. Low distortion and noise level
3. Excellent output regulation
4. A full range of plug-in modules
5. Self-protecting circuitry design
6. Varied output impedances : 4 ohms, 8 ohms, 25 and 70 volts
7. Input level switch (selectable 1000 mV/100 mV)
8. Portable or rack mounting type

■ Nomenclature

< Front Panel >

P-906MK2, P-912MK2

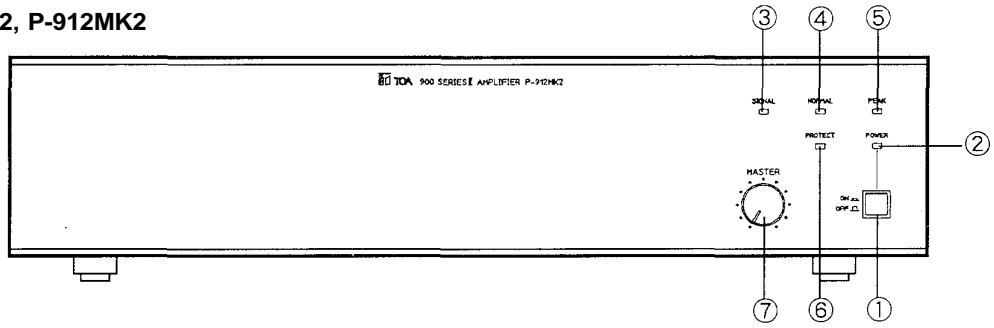

P-924MK2

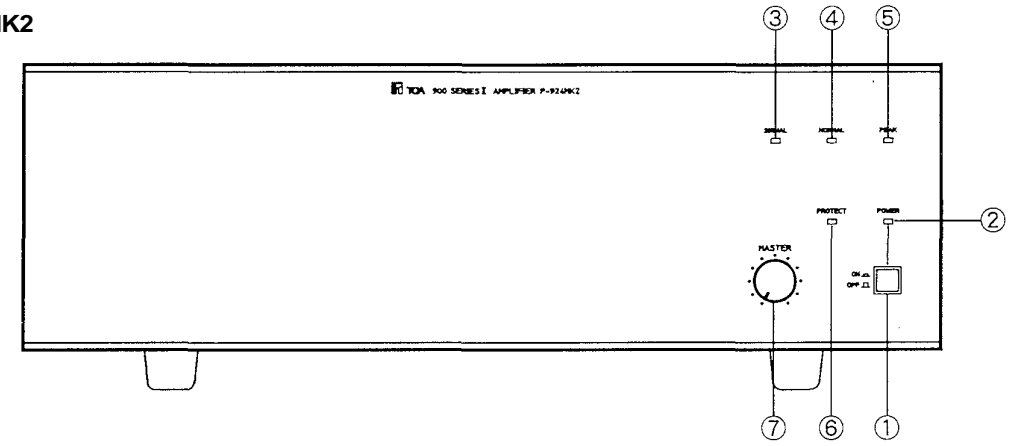

① **Power Switch**
Applies line power. Two-position push button switch for on/off modes.

② **Power Indicator LED**
Green LED lights when the power is switched "ON".

③ **Signal Indicator LED**
Green LED lights when more than -30 dB signal level is fed to the inputs by means of the master volume control.

④ **Normal Indicator LED**
Yellow LED lights when fed to the proper signal level.

⑤ **Peak Indicator LED**
Red LED lights when amplifier approaches clipping level. If steady lit, the input level control should be turned down until the LED flashes.

⑥ **Protection Indicator LED**
Remains lit for about 5 seconds after power switch is turned ON.

⑦ **Master Volume Control**
Adjust gain of input.

< Rear Panel >

P-906MK2, P-912MK2

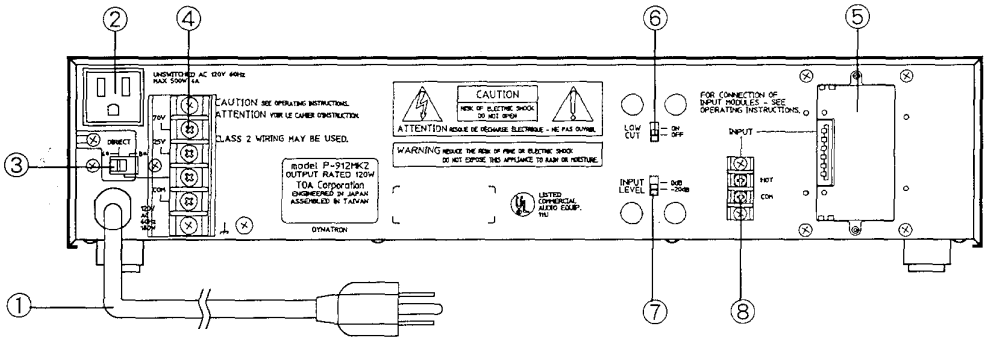

P-924MK2

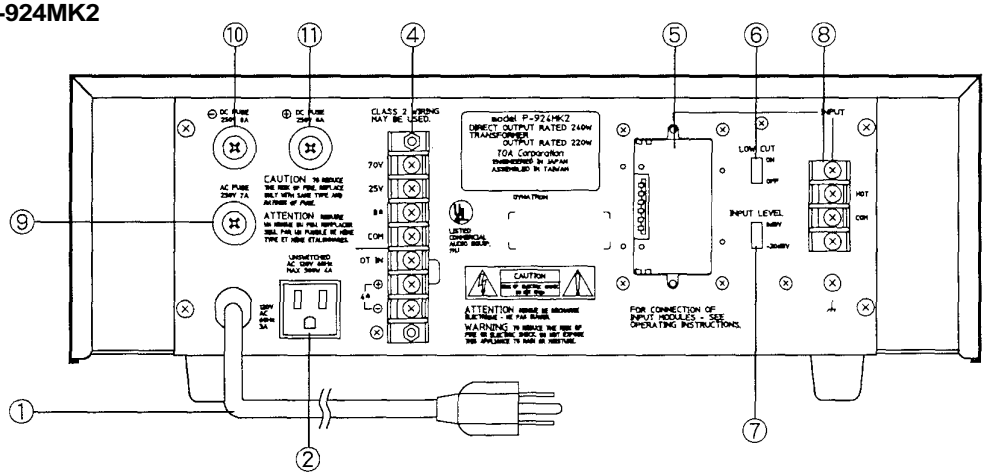

① **AC Power Cord**

Connects to power source.

② **AC Outlet (Unswitched)**

Provides AC power for auxiliary equipment with power consumption of up to 500W.

③ **Impedance Select Switch**

Selects the desired impedance.

Enables unbalanced output of low impedance when this switch is set to "DIRECT".

④ **Output terminals**

Connect to speakers.

⑤ **Module Input Port**

Accepts optional PLUG-IN MODULES.

Application determines type of module.

For details, refer to Plug-in Module Instruction Manual.

⑥ **Low-Cut Switch**

Cut off unnecessary low frequency.

⑦ **Input Level Switch**

Selects input sensitivity. Place in "1V" (0 dBV) position when normally used as a power amplifier.

Note: The position of INPUT-LEVEL SWITCH should be changed according to modules used or equipment connected to DIRECT INPUT TERMINAL.

⑧ **Direct Input Terminal**

Connects directly to external equipment without using modules.

Unbalanced 10k ohms.

⑨ **AC Fuse** (250V, 7A)

⑩ **DC Fuse** ⊖ (250V, 8A)

⑪ **DC Fuse** ⊕ (250V, 8A)

Protects amplifier from excessive current drain. Replace only with same type fuse.

Refer to qualified service personnel if fuse blows repeatedly.

■ Input Connections

- Two types of input terminals are provided on the rear for input connections.

  (1) 2P terminal (marked HOT, COM)
  It is provided for direct input (unbalanced, 10k ohms) without using plug-in module. This terminal is directly connected with a potentiometer inside.

  (2) Plug-in module input
  Select the desired module according to application.
  DIRECT INPUT TERMINAL and MODULE INPUT are not usable simultaneously.

- Plug the modules into the INPUT PORT, sliding it between the guide rails and secure with two screws.

- When INPUT PORT is not occupied, cover the PORT with the blank panel and secure it with screws.

- Be sure that INPUT-LEVEL SWITCH is in the proper position for the module used or the equipment connected to DIRECT INPUT TERMINAL.

- When the P-906MK2, P-912MK2 or P-924MK2 is used in combination with a mixer preamplifier or serves as an incremental power amplifier, normally place INPUT-LEVEL SWITCH in "1V (0 dBV) position.

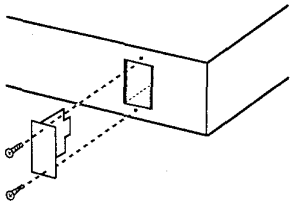

CAUTION: Modules should not be inserted or removed while the amplifier is turned on.

■ Output Connections

The speaker outputs of the amplifier are 4 ohms, 8 ohms, 25V and 70V.
Connect speakers to any one of these outputs.
Class 2 wiring may be used.

There are two types of output ;

- 8 ohms, 25V and 70V via output (matching) transformer
- 4-ohm direct output.

The connecting method differs in each case. Refer to the following diagrams.

Note : Impedances indicated below imply total speaker system (load) impedances.

● To connect speakers to outputs of : 8 ohms, 25V or 70V (BALANCED OUTPUT)

(P-906MK2/P-912MK2)

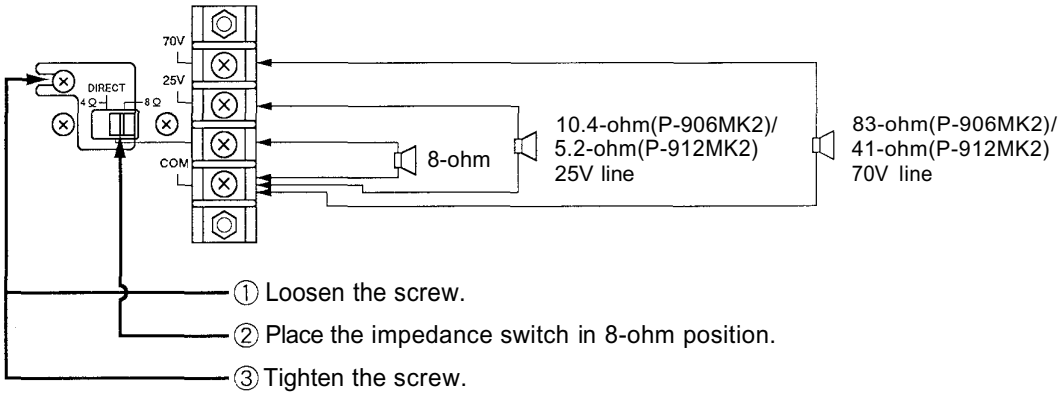

(P-924MK2)

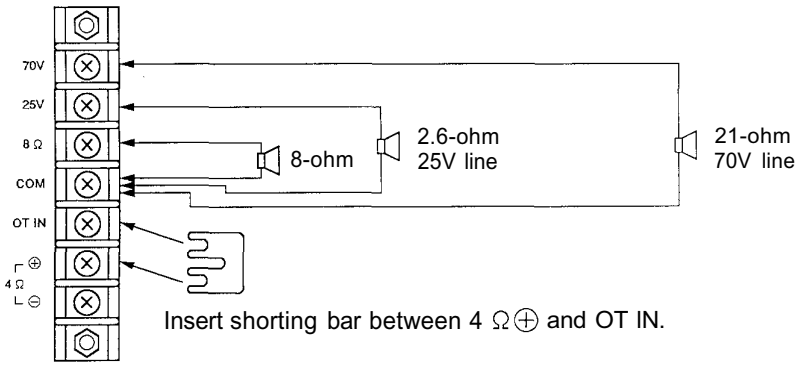

Note : Low-cut switch should be in "CUT" position.
Cut off unnecessary low frequency in TRANS OUTPUT to obtain best acoustic condition. The 900MK2 series amplifiers are characteristically flat even in the low frequency range. Thus, in TRANS OUTPUT the acoustic effect and frequency-response characteristics may be altered.

● To connect speakers to 4-ohm output (UNBALANCED DIRECT OUTPUT)

(P-906MK2/P-912MK2)

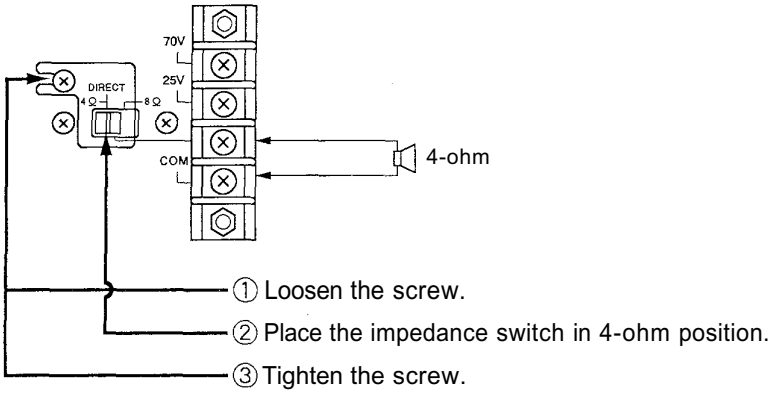

(P-924MK2)

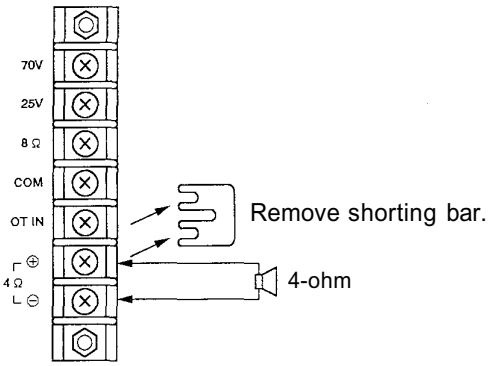

■ Rack Mounting

To mount the amplifier in a standard 19" equipment rack, use the optional MB-25B, MB-35B rack mounting bracket.

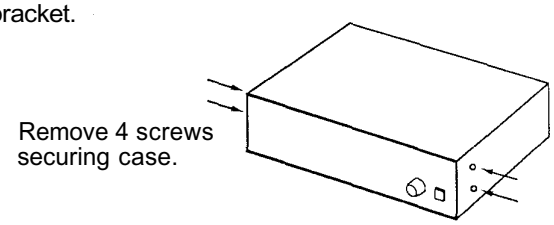

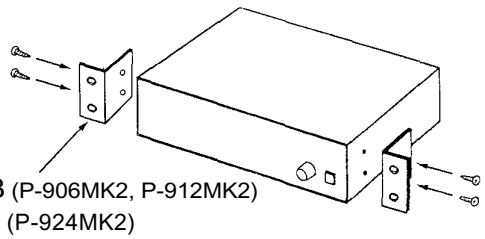

Fix the brackets with attached 4 screws. The length of screws should not exceed 12mm (1/2").

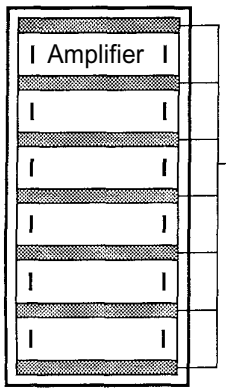

PF-511 perforated panel (1-unit size)

Use the perforated panel PF-511 to provide space for ventilation, when two or more units are mounted in an equipment rack.
Contact your local TOA dealer for the perforated panel PF-511.

■ Operation

After all connections are made, turn power switch ON, illuminating the Power Indicator LED. The amplifier comes into operation approximately 5 seconds after the power is turned on.

■ Volume Adjustment

Obtain desired output level by adjusting the master volume control. For normal music playing or announcement, adjust the master volume control until the normal LED intermittently lights. Sound quality is deteriorated when the peak LED remains lit.
When the power amplifier is used in combination with a mixer preamplifier, adjust total gain at the mixer preamplifier with the gain setting of power amplifier at maximum.

■ Installation

Never block ventilation holes.
The amplifier should never be placed in areas

- exposed to direct sunlight.
- with high humidity or dust levels.
- with high ambient temperatures.
- susceptible to vibration.
- with poor ventilation.
- adjacent to heat-generating equipment.

CAUTION : Do not remove the case or you may encounter an electric shock.

Note : When the temperature of heat sink exceeds 105 °C the protection circuit is activated and the output is disconnected from the circuit. Output is automatically restored when the temperature return to normal operating parameter.

■ Servicing

● Unpacking

Upon receipt of the amplifier shipment, please inspect for any damage incurred in transit. If damage is found, please notify your local TOA representative and the transportation company immediately.
State date, nature of damage, whether any damage was noticed on the shipping container, prior to unpacking. Please give waybill number of shipping order.

● Failure

Should amplifier fail, contact your nearest TOA authorized contractor or service center.

■ Specifications

	P-906MK2	P-912MK2	P-924MK2
Type	Power amplifier		
Output Power	60W RMS	120W RMS	(D) 240W RMS, (T) 220W RMS
Power Band Width	(D) 20 ~20,000 Hz, 0.5% THD (T) 50 ~20,000 Hz, 0.5% THD		
Frequency Response	(D) 20 ~20,000 Hz, ± 1 dB (T) 20 ~15,000 Hz, ± 1 dB, (T) 20 ~20,000 Hz, +1 dB, -3 dB		
Total Hamonic Distortion	0.01% at 1 kHz, rated output		
Inputs	One Input Ports : Port accepts any input module except T-01. One Direct Input **Note** : Use of direct input prohibits use of modular input port.		
Input Sensitivity/Impedance	Input Port : 100 mV or 1000 mV (switchable)/10k ohms Direct Input : 100 mV or 1000 mV (switchable)/10k ohms		
Outputs (T)=Transformer (D)=Direct	Main (T) : 8 ohms, 25 & 70 volts, balanced Main (D) : 4 ohms, unbalanced		
Output Regulation (1 kHz)	(D) Less than 0.5 dB, no load to full load (T) Less than 1.0 dB, no load to full load		
Signal to Noise Ratio (Band Pass 20 -20,000 Hz)	Input level switch in 0 dBV (1000 mV) position : 108 dB Input level switch in -20 dBV (100 mV) position : 90 dB		
Controls	1 Input gain control 1 Input level switch 1 Power ON/OFF switch 1 Low-Cut switch		
Indicators	1 Power LED, 1 Protect LED, 1 Signal LED, 1 Normal LED, 1 Peak LED		
Protection	Self-protection, with AC fuse (inside)		Self-protection, with 2AC fuses (1 inside) and 2DC fuses
Connectors	Input ..... Card-edge connector and screw-terminal strip Output ..... Screw-terminal strip AC outlet ..... 3-pin grounding type AC power cord/plug ... SJT, 3-prong type		
Power Consumption	100W	180W	120V/3A
Temperature Range	-10°C~+60°C [12°F~140°F]		
Dimensions (W) x (H) x (D)	420 x 99.1 x 358 mm [16.5 x 3.9 x 14.1 in.]		420 x 151.3 x 334.2 mm [16.5 x 6.0 x 13.2 in.]
Weight	9.1 kg [20.1 lb.]	10.9kg [24.0 lb.]	19.5kg [43 lb.]
Color	Black		
Standard Accessories	1 Volume control cover (YA-920)		
Other Features	Output disconnected for approx. 5 seconds after switching power on.		

* Specifications are subject to change without notice.

■ Appearance (P-906MK2/P-912MK2)

< Front View>

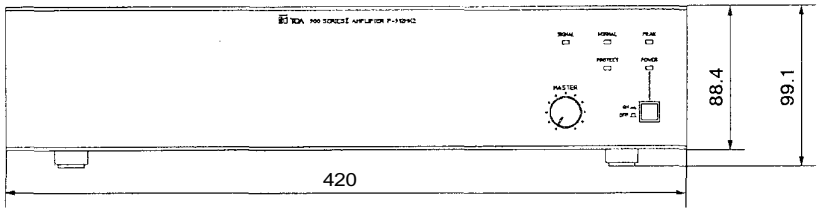

< Rear View>

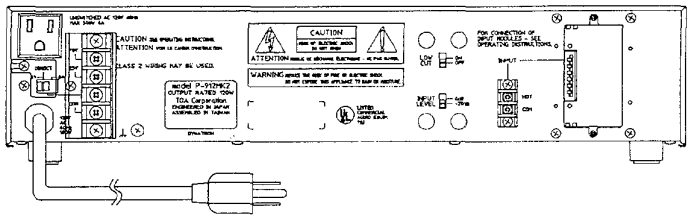

< Top View>

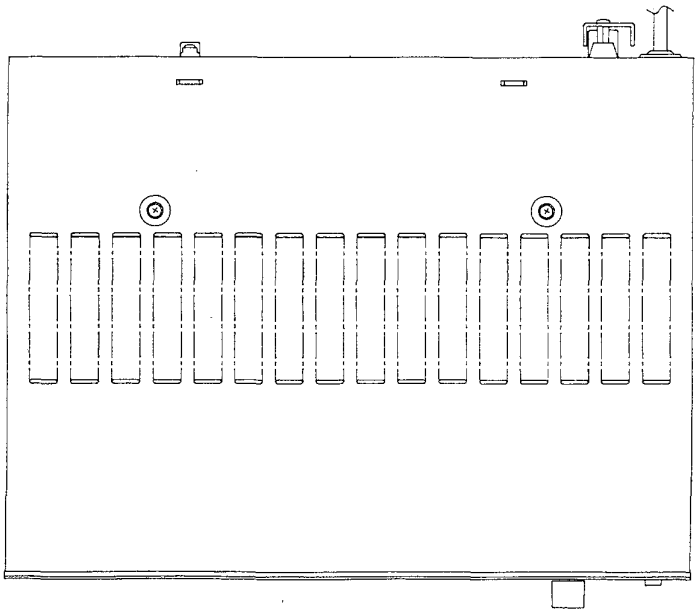

< Side View >

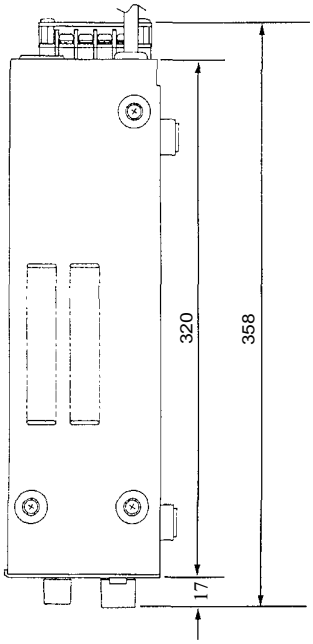

■ Appearance (P-924MK2)

< Front View>

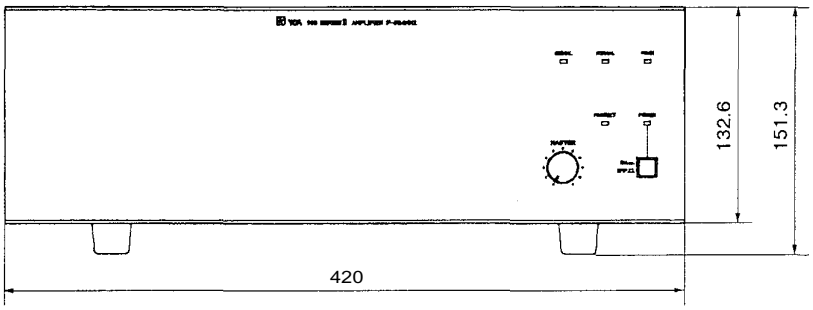

< Rear View >

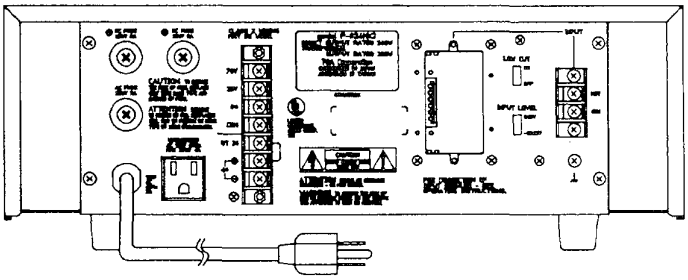

< Top View>

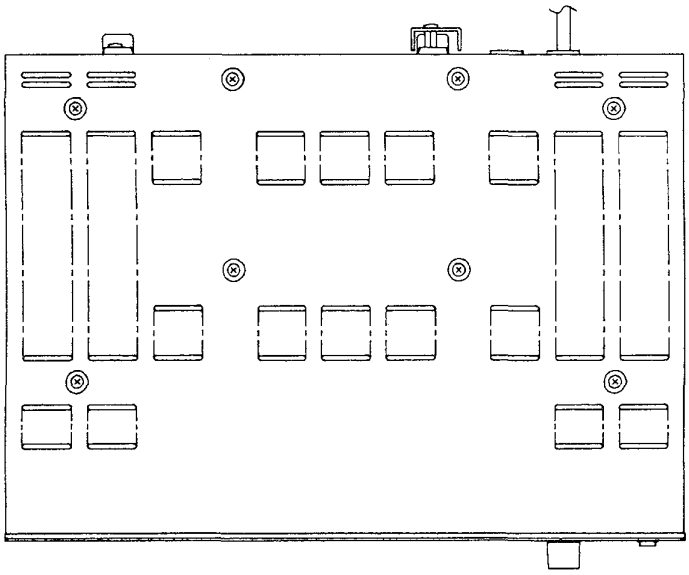

< Side View>

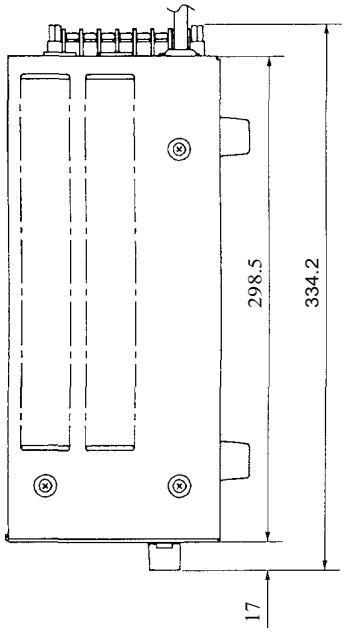

TOA Corporation
KOBE, JAPAN

PRINTED IN TAIWAN
133-12-116-60

TOA

900 SERIES

POWER AMPLIFIERS:

P-906MK2
P-912MK2
P-924MK2

THE TOA 900 SERIES are widely recognized as the industry standard in installed sound system amplification. When reliability and performance are critical – such as in paging and music distribution for airport, hospital, and industrial sound systems – you can count on the TOA 900 Series to perform consistently, day-in and day-out.

The **P-906MK2** (60 W), **P-912MK2** (120 W) and **P-924MK2** (240 W) **Single Channel Power Amplifiers** are engineered for high performance with wide frequency response, very low noise and distortion, and excellent output regulation. A single module slot allows you to easily configure custom configurations using TOA plug-in modules with an extensive array of features and connector types. Outputs include transformer-isolated 25 V, 70 V and 8 ohm plus a direct low-impedance mode if non-transformer operation is required.

Other features include a direct input, selectable input sensitivity, low-cut switch and protection circuitry.

The 900 Series Power Amplifiers are UL and cUL Listed and carry a five year warranty.

HIGHLIGHTS

- **Modular Single Channel Power Amplifiers** for paging, background/foreground music distribution and music/messaging-on-hold.
- **Proven TOA Quality and Reliability**
- **Engineered for High Performance** with wide frequency response, very low noise and distortion, and excellent output regulation.
- **Three Models:** **P-906MK2** (60 W), **P-912MK2** (120 W), **P-924MK2** (240 W)
- **Input Module Slot** accepts most TOA plug-in modules for custom system configurations.
- **25 V, 70 V and 8 Ohm Transformer-Isolated Speaker Outputs** with screw terminal connector and protective cover plate.
- **Direct Low-Impedance Output Mode** bypasses output transformer.
- **Direct Input** for connecting an external mixer or other source.
- **Selectable Input Sensitivity** to accommodate high or low input levels.
- **Master Volume Control**
- **Low Cut Switch** to limit low frequency response.
- **Normal, Clip, Power, Protect, and Signal Indicators** provide unit status.
- **Rear Panel AC Convenience Outlet** for powering external equipment
- **Turn-On Delay** disconnects output during power-up.
- **Over-current and Thermal Protection Circuitry** prevents potential damage from overload, short-circuit, or overheating.
- **Volume Control Security Knob Included**
- **Optional Rack-Mount Kits**
- **UL / cUL Listed**
- **Five Year Warranty**

OPTIONAL ACCESSORIES

Plug-in Modules (see individual module specifications)

MB-25B	Rack-mount Kit (2 RU): P-906MK2 / P-912MK2
MB-35B	Rack-mount Kit (3 RU): P-924MK2
PF-511	Perforated Rack Panel (2 RU)
YA-920	Volume Control Security Knob

900 Series Module Guide available from http://www.toaelectronics.com

SPECIFICATIONS

900 SERIES
POWER AMPLIFIERS

Tel: 800-733-7088
Fax: 800-733-9766
www.toaelectronics.com

TOA

Type	Power amplifier
Output Power	**P-906MK2**: 60 W RMS; **P-912MK2**: 120 W RMS **P-924MK2**: 240 W RMS
Power Bandwidth	(D) 20 - 20k Hz, 0.5% THD; (T) 50 - 20k Hz, 0.5% THD
Frequency Response	(D) 20 - 20k Hz, ±1 dB; (T) 20 - 15k Hz, ±1 dB (T) 20 - 20k Hz, +1 dB / -3 dB
Total Harmonic Distortion	0.01% at 1k Hz, rated output
Inputs	1 modular input port 1 direct input Use only one of direct input or modular input port.
Input Sensitivity & Impedance	Input port: 100 mV or 1000 mV (switchable)/10k Ω Direct input: 100 mV or 1000 mV (switchable)/10k Ω
Outputs (T)=Transformer, (D)=Direct	Main (T): 8 Ω, 25 V & 70 V, balanced Main (D): 4 Ω, unbalanced
Output Regulation (1k Hz)	(D): Less than 0.5 dB, no load to full load (T): Less than 1.0 dB, no load to full load
Dynamic Range (Band Pass: 20 - 20k Hz, with Tone Controls centered)	Input level switch in 0 dBV (1000 mV) position: 108 dB Input level switch in -20 dBV (100 mV) position: 90 dB
Indicators	Normal, Peak, Power, Protect, and Signal LEDs
Protection	**P-906/912MK2**: Self-protection, with internal AC fuse **P-924MK2**: Self-protection, with 2 AC fuses (1 internal) and 2 DC fuses.
Power Consumption	**P-906MK2**: 100 W; **P-912MK2**: 180 W; **P-924MK2**: 120V/3A
Temperature Range	12° F to 140° F (-10° C to +60° C)
Color	Black
Dimensions (W x H x D)	**P-906/912MK2**: 16.5" x 3.9" x 14.1" (420 x 99.1 x 358 mm) **P-924MK2**: 16.5" x 6.0" x 13.2" (420 x 151.3 x 334.2 mm)
Weight (without modules)	**P-906MK2**: 20.1 lbs (9.1 kg); **P-912MK2**: 24.0 lbs (10.9 kg) **P-924MK2**: 43.0 lbs (19.5 kg)
Other Features	Output connects approx. 5 seconds after switching power on.

Visit www.toaelectronics.com to download:

900 Series Architect and Engineering Specifications
900 Series Installation Manual
900 Series CAD Files
900 Series Module Guide

APPLICATIONS

A/V Rentals
Airports
Audio/Visual
Auditoriums / Theatres
Banks
Bars / Lounges / Nightclubs
Boardrooms
Business Music
Conference Facilities
Convenience Stores
Educational Facilities
Fitness Clubs / Gymnasiums
Hotels / Hospitality
Houses of Worship
Industrial / Warehouses
Museums
Music Distribution
Offices
Public Address
Restaurants
Retail Stores
Theme Parks
Training Rooms

TOA

900 SERIES
POWER AMPLIFIERS

Tel: 800-733-7088
Fax: 800-733-9766
www.toaelectronics.com

MODULE SELECTION

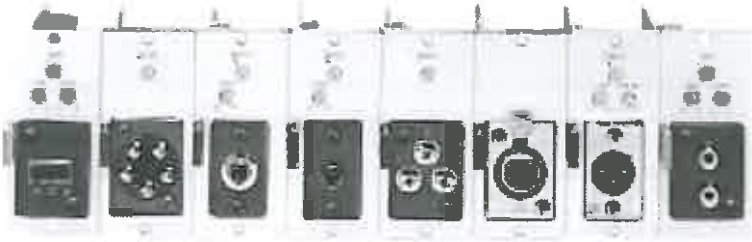

Model	Type	Description
M-01F	MIC	Microphone Input Module, Balanced, 200 Ω, Lo/Hi-Cut Filters, Female XLR
M-01M	MIC	Same as M-01F with Male XLR
M-01P	MIC	Same as M-01F with Phone Jack
M-01S	MIC	Same as M-01F with Screw Terminals
M-03P	MIC	Microphone Input Module, HiZ, Unbalanced, 50k Ω, Lo/Hi-Cut Filters, Phone Jack
M-21S	MIC	Microphone Input Module, Balanced, 200 Ω, Lo/Hi-Cut Filters, Remote Vol. Control, Screw Terminals
M-51F	MIC	Microphone Input Module, Balanced, 200 Ω, Lo-Cut Filter, Voice Gate, Female XLR
M-51S	MIC	Same as M-51F with Screw Terminals
M-61F	MIC	Microphone Input Module, Balanced, 200 Ω, Lo/Hi-Cut Filters, Compressor, Female XLR
M-61S	MIC	Same as M-61F with Screw Terminals
B-01F	LINE	Balanced Line Input Module, 10k Ω Transformer, Female XLR
B-01S	LINE	Balanced Line Input Module, 10k Ω Transformer, Screw Terminals
B-21S	LINE	Balanced Line Input Module, 10k Ω Transformer, Remote Volume Control, Screw Terminals
L-01F	LINE	Line Matching Input Module, 600 Ω Transformer, Balanced, Female XLR
L-01S	LINE	Same as L-01F with Screw Terminals
U-01F	LINE	Line Input Module, Unbalanced, 220k Ω, Female XLR
U-01P	LINE	Same as U-01F with Phone Jack
U-01R	LINE	Same as U-01F with RCA Jack
U-01S	LINE	Same as U-01F with Screw Terminals
U-03R	LINE	Stereo Line Input Module, Lo/Hi-Cut Filters, Stereo Summing Dual RCA Jacks
U-03S	LINE	Line Input Module, Lo/Hi-Cut Filters, Screw Terminals
U-21S	LINE	Line Input Module, Unbalanced, 220k Ω, Remote Volume Control, Screw Terminals
U-61S	LINE	Line Input Module, Unbalanced, 220k Ω, Compressor, Screw Terminals
E-03R	SPECIAL FUNCTION	900 Series Processor Module for F-121C/CM Speakers, Dual RCA Jacks
E-04R	SPECIAL FUNCTION	900 Series Processor Module for H-1 Speakers, Dual RCA Jacks
E-05R	SPECIAL FUNCTION	900 Series Processor Module for H-2/H-2WP Speakers, Dual RCA Jacks
E-06R	SPECIAL FUNCTION	900 Series Processor Module for H-3/H-3WP Speakers, Dual RCA Jacks
S-01S	SPECIAL FUNCTION	Signal Generator Module, 1 kHz Sine Wave, Screw Terminals
S-02S	SPECIAL FUNCTION	Signal Generator Module, Buzzer/Yelp, Screw Terminals
S-04S	SPECIAL FUNCTION	Signal Generator Module, 8 Selectable Tones, Screw Terminals
T-02S	SPECIAL FUNCTION	Line Input Module for Music-on-Hold, Unbalanced, 220k Ω Input, 600 Ω Balanced Output, Screw Terminals

TOA ELECTRONICS, INC.
601 GATEWAY BLVD., SUITE 300
SOUTH SAN FRANCISCO, CA 94080
TEL: 800-733-7088
FAX: 800-733-9766
www.toaelectronics.com

900 SERIES
POWER AMPLIFIERS

900 SERIES MODULE CHART

		Female XLR	Male XLR	1/4" Phone Jack	RCA Jack	Dual RCA Jacks	3 Screw Terminals	5 Screw Terminals	Removable Terminal Block
Microphone Input Modules	Standard with high/low cut filters	M-01F	M-01M	M-01P			M-01S		
	Voice Gate with low cut filters	M-51F					M-51S		
	Compressor with high/low cut filters	M-61F					M-61S		
	Remote Volume Control with high/low filters							M-21S	
	For high-Z mic. only w/ high/low cut filters			M-03P					
Line Input Modules*	Standard, no special features	L-01F B-01F U-01F		U-01P	U-01R		L-01S B-01S U-01S		
	Standard with high/low cut filters					U-03R			U-03S
	Remote Volume Control							B-21S U-21S	
	Compressor						U-61S		
Special Function Modules	Line output						T-01S		
	Line input with Music-On-Hold (MOH) output							T-02S	
	1 kHz Sine Wave test tone						S-01S		
	Buzzer/Yelp signal tone						S-02S		
	Switch-selectable tone						S-04S		
	Equalizer for F-121C/CM Speakers					E-03R			
	Equalizer for H-1 Speakers					E-04R			
	Equalizer for H-2/H-2WP Speakers					E-05R			
	Equalizer for H-3/H-3WP Speakers					E-06R			

**For Line Input Modules: Use "B" modules w/ transformer isolation for balanced/unbalanced sources. Use "L" modules only for 600 ohm impedance matching. Use "U" for unbalanced sources w/ short cables (≤ 15 feet).*

Literature Order #: L-900SERIES
Specifications subject to change without notice.
© 2003, TOA Electronics, Inc.

Denny Behrens

From: AmyDawson@Eaton.com
Sent: Friday, April 21, 2017 11:55 AM
To: Denny Behrens; TomAJackett@Eaton.com
Cc: Carl Rabeneck
Subject: RE: Menard 2017 store equipment

Adding a shunt trip and changing (2) breakers to provisions cancels out the cost change. Your pricing remains $55,940.00.

Thanks!

Amy Dawson

mobile: +1 612 999-3396
tel: + 1 952 939-5436
AmyDawson@eaton.com
www.Eaton.com/Electrical

From: Denny Behrens [mailto:dbehrens@menard-inc.com]
Sent: Friday, April 21, 2017 11:14 AM
To: Dawson, Amy
Cc: Carl Rabeneck
Subject: RE: Menard 2017 store equipment

Amy
Just need the final cost.
Thanks
Denny

From: AmyDawson@Eaton.com [mailto:AmyDawson@Eaton.com]
Sent: Friday, April 21, 2017 10:20 AM
To: Denny Behrens; TomAJackett@Eaton.com
Cc: Carl Rabeneck
Subject: RE: Menard 2017 store equipment

Denny,

Please see attached for your updated BOM.

Page 5 of the bill of materials, the safety switch for the bi-fold doors, does this switch come in a 15 amp rating or should we leave it as a 30 amp unit and just put in 15 amp fuses in the field?
You will need to install a 15A fuse.

Sheet 1 of 28, under special notes, add in panel B with the other panels listed.
DONE

Sheet 17 of 28, Panel R, the 100 amp breaker for the elevator should be the shunt trip breaker.
DONE

Sheet 19 of 28 there are two sheets for panel A, just need to remove one. Also shows two on sheet 28 #14 panel section.
This is just an error in our online printing – please dismiss

Sheet 24 of 28, Panel PP1 has two spare 200 amp breakers that are not needed, please remove these and just have as spaces.
DONE- spare breakers are now provisions.

Thanks
Denny Behrens

CONFIDENTIALITY NOTICE
This communication constitutes an electronic communication within the meaning of the Electronic Privacy Act, 18 U.S.C. Section 2510, et. seq. Disclosure of this communication is strictly limited to the intended recipient. This communication and its contents and attachments, if any, are confidential and may contain information that is privileged or otherwise exempt from disclosure under applicable law. Receipt by any person or entity other than the intended recipient does not constitute waiver or loss of the confidential or privileged nature of this communication. Any review, dissemination, copying, resubmission, transfer, or distribution in any form by any person or entity other than the intended recipient is strictly prohibited. If you are not the intended recipient, please notify the sender immediately and delete any and all copies of this communication and any attachments. Failure to abide by these provisions will result in legal and equitable action taken against you, as identified in 18 U.S.C. Sections 2520-21.

Detail Bill of Material

Project Name: 2017 MENARDS STORE GEAR
General Order No:
Negotiation No: MP510513X6K1
Alternate No: 0000

Item No.	Qty	Product	Description
	1	Switchboards	IFS Switchboard, Front Access/ Rear Align, Type 1, 480Y/277V 3-Phase 4-Wire, 1600 Aluminum, Minimum Interrupting Rating: 65kA, Bus Bracing Rating: 65kA

Designation STANDARD

Qty	List of Materials
1	IFS Switchboard
14	Switchboard - Front Access/ Rear Align
1	Service Entrance Label
7	IFS Integration Structure
1	Installation and Connection, Panel Panel J
11	IFS - Panelboard PRL1a
16	Aluminum Main Bus, 225 Amps
2	Insulated / Isolated and Std Cu Ground Bar (Cu Cable Only)
16	Standard Trim, IFS
16	Panel Nameplate - White with Black Letters
16	Circuit Directory - Metal Frame with Plastic Cover
16	IFS Panelboard Nameplate
14	225A, Main Lugs Only
16	****TVSS None
401	20A, 1P BAB Branch Breaker
16	****USA chassis
16	****Main Chassis
14	1P BAB Branch Provision Only
1	Installation and Connection, Panel Panel K
3	30A, 1P BAB Branch Breaker
1	Installation and Connection, Panel Panel P (C)
11	Std. Bolted Cu Ground Bar (Cu Cable Only)
1	Installation and Connection, Panel Panel I
1	225A, MLO-Upstream ED
2	100A, 3P BAB-H Branch Breaker
18	20A, 1P QBGFT Branch Breaker, GFCI - 5mA
3	60A, 2P BAB Branch Breaker
1	Installation and Connection, Panel Panel N (C)
1	Installation and Connection, Panel Panel L (C)
1	IFS Integration Structure
1	Installation and Connection, Panel Panel M (C)
1	Steel Back Pan, with Hinged Compartment Door
1	IFS Integration Structure
1	22X Swbd Chassis, 400A Al bus, 208Y/120V 3-Phase 4-Wire
1	400A Main Lugs for IFS swbd chassis
39	Nameplate
35	Thermal Mag Trip - Standard
1	Steel Back Pan, with Hinged Compartment Door
1	Installation and Connection, Panel Panel E
1	Installation and Connection, Panel Panel F (C)
1	IFS Integration Structure
1	50X Swbd Chassis, 800A Al bus, 208Y/120V 3-Phase 4-Wire
1	IFS Integration Structure
1	General Purpose, DOE 2016 Rated Transformer, 150 deg C, Al Windings, 300 KVA with Factory Connections
1	1600 Amp AL Main Structure
1	Digitrip RMS310 LSG-RD
1	Single Phase Protection
1	Shunt Trip (110-125Vdc)
1	Vertical Isol. Barrier (Service Entrance)
1	SPD Series 120kA SPD, Basic (Disconnect Included)

Project Name: 2017 MENARDS STORE GEAR
General Order No:
Negotiation No: MP510513X6K1
Alternate No: 0000

Qty	List of Materials
1	1600 Amp AL Distribution Structure
1	IFS Integration Structure
1	Steel Back Pan, with Hinged Compartment Door
1	Installation and Connection, Panel Panel R
1	225A, MLO-Upstream HFD
1	100A, 3P GHB Branch Breaker
1	Shunt Trip (120Vac)
4	30A, 3P GHB Branch Breaker
5	20A, 3P GHB Branch Breaker
5	20A, 2P GHB Branch Breaker
135	20A, 1P GHQ Branch Breaker
5	IFS - Panelboard PRL2a
1	Installation and Connection, Panel Panel B (C)
35	1P GHQ Branch Provision Only
1	Installation and Connection, Panel Panel A (C)
1	Installation and Connection, Panel Panel A (C)
3	Std. Bolted Al Ground Bar (Al/Cu Cable)
1	Installation and Connection, Panel Panel C (C)
1	Seismic Freestanding Label (IBC/CBC Seismic Qualified)
8	200A Contactor (Feeding Panels A, B, C, F, L, M, N, P)
8	200A Contactor Cable
8	200A Contactor Installation
2	100A Contactor Feeds Pylon Lights & W1
2	100A Contactor Cable
2	100A Contactor Installation
12	DPDT 24VAC Relay - Cat# D3PF2AT and Cat# D#PA2-A2
1	30A Contactor - 8 Pole + Wire/Installation
13	H-O-A Toggle Switch for Contactors + Wire/Installation
1	H-O-A Toggle Switch for Remote W1 Panel + Wire/Installation
1	50A, 2P BAB Branch Breaker
3	30A, 2P BAB Branch Breaker
1	Installation and Connection, Panel Panel T
3	20A, 2P BAB Branch Breaker
1	Installation and Connection, Panel Panel H
1	Wire per S00JRS3S01 R2 Wiring Diagram revised 5/20/14
1	30A Contactor - 4 Pole + Wire/Installation
60	Blank Space COvers
2	150A 3P [ED 225A Frame], Trip 150 A, Thermal Mag, (1) #4-4/0, Mechanical
3	100A 3P [ED 225A Frame], Trip 100 A, Thermal Mag, (1) #14-1/0, Mechanical
1	800A 3P [MDL 800A Frame], Vertically Mtd., Trip 800 A, Thermal Mag, (3) 3/0-400 kcmil, Mechanical
10	200A 3P [ED 225A Frame], Trip 200 A, Thermal Mag, (1) #4-4/0, Mechanical
1	3P [ED 225A Frame] Provision
1	300A 3P [DK 400A Frame], Trip 300 A, Thermal Mag, (1) 250-500 kcmil, Mechanical
1	1600A 3P [RD 1600A Frame], Trip 1600 A, RMS310 LSG, (5) 3/0-750 kcmil, Mechanical, Bottom
1	400A 3P [HKD 400A Frame], Trip 400 A, Thermal Mag, (1) 2/0-500 kcmil, Mechanical
3	200A 3P [HFD 225A Frame], Trip 200 A, Thermal Mag, (1) #4-4/0, Mechanical
1	3P [HFD 225A Frame] Provision
11	70A 3P [HFD 225A Frame], Trip 70 A, Thermal Mag, (1) #14-1/0, Mechanical
1	100A 3P [HFD 225A Frame], Trip 100 A, Thermal Mag, (1) #14-1/0, Mechanical
1	225A 3P [HFD 225A Frame], Trip 225 A, Thermal Mag, (1) #4-4/0,

Qty	List of Materials
	Mechanical
1	60A 3P [HFD 225A Frame], Trip 60 A, Thermal Mag, (1) #14-1/0, Mechanical

Item No.	Qty	Product	Description
	1	Panelboards	30 Circuits, 100A, Fully Rated, 208Y/120V 3Ph 4W, Aluminum Bus, 10k AIC, 100A, 3P BAB-H Main Breaker[Bottom Fed], Surface Mounted

Catalog No P1A100BB30AH01
Designation Panel W2

Qty	List of Materials
1	100A, 3P BAB-H Main Breaker
14	20A, 1P BAB Branch Breaker
3	20A, 2P BAB Branch Breaker
7	1P BAB Branch Provision Only
1	Std. Bolted Al Ground Bar (Al/Cu Cable)
1	Panel Nameplate - White with Black Letters
1	Type 1 Enclosure: EZB2036R
1	EZ Trim, Door in Door, Concealed Hardware: EZT2036S

Item No.	Qty	Product	Description
	1	Panelboards	30 Circuits, 100A, Fully Rated, 480Y/277V 3Ph 4W, Aluminum Bus, 14k AIC, 100A, 3P EHD Main Breaker[Bottom Fed], Surface Mounted

Catalog No P2D100BB30AH01
Designation Panel W1

Qty	List of Materials
1	100A, 3P EHD Main Breaker
10	20A, 1P GHQ Branch Breaker
20	1P GHQ Branch Provision Only
1	Std. Bolted Al Ground Bar (Al/Cu Cable)
1	Panel Nameplate - White with Black Letters
1	Type 1 Enclosure: EZB2042R
1	EZ Trim, Door in Door, Concealed Hardware: EZT2042S

Item No.	Qty	Product	Description
	1	Panelboards	42 Circuits, 225A, Fully Rated, 208Y/120V 3Ph 4W, Aluminum Bus, 10k AIC, 225A, Main Lugs Only[Top Fed], Surface Mounted

Catalog No P1A225LT42AH01
Designation Panel G

Qty	List of Materials
1	225A, Main Lugs Only
31	20A, 1P BAB Branch Breaker
11	1P BAB Branch Provision Only
1	Std. Bolted Al Ground Bar (Al/Cu Cable)
1	Panel Nameplate - White with Black Letters
1	Type 1 Enclosure: EZB2042R
1	EZ Trim, Door in Door, Concealed Hardware: EZT2042S

Project Name: 2017 MENARDS STORE GEAR
General Order No:
Negotiation No: MP510513X6K1
Alternate No: 0000

Item No.	Qty	Product	Description
	1	Safety Switches	Safety Switches

Catalog No DH361NRK
Designation Trash Compact

Qty	List of Materials
1	Single Throw - Heavy Duty - Fusible with Neutral, 3-Pole, 600 VAC, 30 A, NEMA 3R

Item No.	Qty	Product	Description
	1	Safety Switches	Safety Switches

Catalog No DH361FGK
Designation Cardboard Com

Qty	List of Materials
1	Single Throw - Heavy Duty - Fusible with No Neutral, 3-Pole, 600 VAC, 30 A, NEMA 1

Item No.	Qty	Product	Description
	9	Safety Switches	Safety Switches

Catalog No DH361UGK
Designation Batt Chargers

Qty	List of Materials
1	Single Throw - Heavy Duty - Non-Fusible with No Neutral, 3-Pole, 600 VAC, 30 A, NEMA 1

Item No.	Qty	Product	Description
	5	Safety Switches	Safety Switches

Catalog No DG321NGB
Designation Carpet/Vinyl Machines

Qty	List of Materials
1	Single Throw - General Duty - Fusible with Neutral, 3-Pole, 240 VAC, 30 A, NEMA 1

Item No.	Qty	Product	Description
	2	Safety Switches	Safety Switches

Catalog No DH361NRK
Designation Bi-Fold Doors

Qty	List of Materials
1	Single Throw - Heavy Duty - Fusible with Neutral, 3-Pole, 600 VAC, 30 A, NEMA 3R

Project Name: 2017 MENARDS STORE GEAR
General Order No:
Negotiation No: MP510513X6K1
Alternate No: 0000

Item No.	Qty	Product	Description
	1	Safety Switches	Safety Switches

Catalog No DG221UGB
Designation Water Heater

Qty	List of Materials
1	Single Throw - General Duty - Non-Fusible with No Neutral, 2-Pole, 240 VAC, 30 A, NEMA 1

Item No.	Qty	Product	Description
	2	Safety Switches	Safety Switches

Catalog No DH261NGK
Designation Warehouse E lights

Qty	List of Materials
1	Single Throw - Heavy Duty - Fusible with Neutral, 2-Pole, 600 VAC, 30 A, NEMA 1

Item No.	Qty	Product	Description
	1	Safety Switches	Safety Switches

Catalog No DH363FGK
Designation Elv. Mech Room

Qty	List of Materials
1	Single Throw - Heavy Duty - Fusible with No Neutral, 3-Pole, 600 VAC, 100 A, NEMA 1

Item No.	Qty	Product	Description
	1	Safety Switches	Safety Switches

Catalog No DH321FGK
Designation Cab Lights and Fan

Qty	List of Materials
1	Single Throw - Heavy Duty - Fusible with No Neutral, 3-Pole, 240 VAC, 30 A, NEMA 1

Item No.	Qty	Product	Description
	1	Loadcenters	LDCTR: BR, MAIN BKR, 1 PHASE 120/240V, 100A, 12/20

Catalog No BR1220B100
Designation Guard Shack Panel

Qty	List of Materials	Catalog No
1	LDCTR: BR, MAIN BKR, 1 PHASE 120/240V, 100A, 12/20	BR1220B100
4	Thermal Mag	BR120
1	Thermal Mag	BR220

Detail Bill of Material

Project Name:	2017 MENARDS STORE GEAR	**Negotiation No:**	MP510513X6K1
General Order No:		**Alternate No:**	0000

Item No.	Qty	Product	Description
	1	Loadcenters	LDCTR: BR, MLO, 1 PHASE 120/240V, 125A, 6/12

Catalog No BR612L125FP
Designation Elevator Panel

Qty	List of Materials	Catalog No
1	LDCTR: BR, MLO, 1 PHASE 120/240V, 125A, 6/12	BR612L125FP
3	Ground Fault 5mA	GFTCB120
3	Thermal Mag	BR120

Eaton Selling Policy 25-000 applies.

All orders must be released for manufacture within 90 days of date of order entry. If approval drawings are required, drawings must be returned approved for release within 60 days of mailing. If drawings are not returned accordingly, and/or if shipment is delayed for any reason, the price of the order will increase by 1.0% per month or fraction there of for the time the shipment is delayed.

Switchboard General Information

IFS Switchboard - Specifications

Quantity: 1
Alignment: Front Access/ Rear Align
Service: 480Y/277V 3-Phase 4-Wire
Minimum Interrupt Rating: 65 kA

Bus Specifications

Bus Amps: 1600
Bus Bracing Rating: 65kA
Neutral Amps: 1600
Bus Material: Aluminum
Heat Test
Ground Bus Material: Aluminum .25 X 2.0 Ground Bus Bolted To Frame, (1) #6-350 kcmil Ground Lug

Incoming Information

Incoming Entry: Bottom
Incoming Location: T
Incoming Qty & Size: Terminals, Mechanical, (3) 3/0-400 kcmil,

Structure Specifications

Service Entrance
Enclosure Type: Type 1
House Keeping Pad: None
Seismic Label (IBC/CBC Seismic Qualified) - Freestanding
Refer to seismic installation data sheet TD01508002E
and drawing 1A32496 for details.
Nameplates: Mastic - White with Black letters

Special Notes

Qty	Description	Catalog Number
8	200A Contactor (Feeding Panels A, B, C, F, L, M, N, P)	CN93697
8	200A Contactor Cable	CN19340
8	200A Contactor Installation	CN38175
2	100A Contactor Feeds Pylon Lights & W1	CN61588
2	100A Contactor Cable	CN19339
2	100A Contactor Installation	CN38174
12	DPDT 24VAC Relay - Cat# D3PF2AT and Cat# D#PA2-A2	CN80510
1	30A Contactor - 8 Pole + Wire/Installation	CN82093
13	H-O-A Toggle Switch for Contactors + Wire/Installation	CN141200
1	H-O-A Toggle Switch for Remote W1 Panel + Wire/Installation	CN160967
1	Wire per S00JRS3S01 R2 Wiring Diagram revised 5/20/14	CN110125
1	30A Contactor - 4 Pole + Wire/Installation	CN82025
60	Blank Space COvers	CN15946

Enclosure properties

Struct #	Description/Modifications
1	Top/Bottom Compartment (IFS Distribution Structure)
2	Top/Bottom Compartment (IFS Distribution Structure)
3	Top/Bottom Compartment (IFS Distribution Structure)
4	Top/Bottom Compartment (IFS Distribution Structure)
5	Top/Bottom Compartment (IFS Distribution Structure)
6	Top/Bottom Compartment (IFS Distribution Structure)
7	Top/Bottom Compartment (IFS Distribution Structure)
8	Single Compartment (IFS Distribution Structure)
9	Single Compartment (IFS Distribution Structure)
10	Bottom incoming main device (Incoming Main Device/MLO Section)

The information on this document is created by Eaton Corporation. It is disclosed in confidence and it is only to be used for the purpose in which it is supplied.

	Vertical isolating barrier
11	50x chassis mounted feeders (Feeder Structure)
12	Single Compartment (IFS Distribution Structure)
13	Top/Bottom Compartment (IFS Distribution Structure)
14	Top/Bottom Compartment (IFS Distribution Structure)

The information on this document is created by Eaton Corporation. It is disclosed in confidence and it is only to be used for the purpose in which it is supplied.

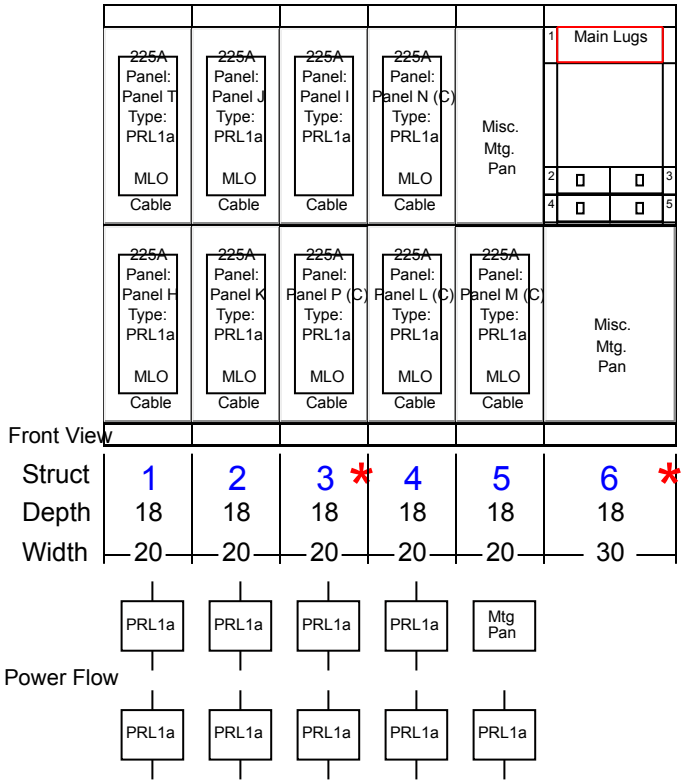

Floor Plan
Rear

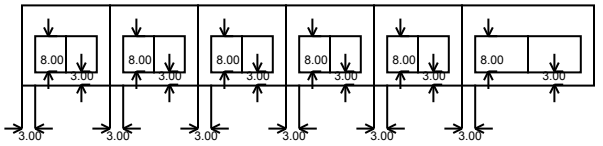

Structure	1	2	3	4	5	6
Ship-Inches			60.00			70.00
Ship-MM			1524			1778
Wdth-Inches	20.00	20.00	20.00	20.00	20.00	30.00
Wdth-MM	508	508	508	508	508	762
Depth(Inner)-In.	18.00	18.00	18.00	18.00	18.00	18.00
Depth(Inner)-MM	457	457	457	457	457	457
Depth(Outer)-In.	18.00	18.00	18.00	18.00	18.00	18.00
Depth(Outer)-MM	457	457	457	457	457	457
Height-Inches	90.00	90.00	90.00	90.00	90.00	90.00
Height-MM	2286	2286	2286	2286	2286	2286
Weight-Lbs.(Est.)	725	725	725	725	475	295
Weight-Kg.(Est.)	328	328	328	328	215	133

The information on this document is created by Eaton Corporation. It is disclosed in confidence and it is only to be used for the purpose in which it is supplied.

PREPARED BY: DAWSON AMY	DATE: 4/21/2017	**Eaton**	SumterSC
APPROVED BY	DATE	JOB NAME: 2017 MENARDS STORE GEAR	
		DESIGNATION: STANDARD	
VERSION: 8.0.18.0		TYPE: Switchboards	DRAWING TYPE: CustAppr
NEG-ALT Number: MP510513X6K1-0000	REVISION: 1	DWG SIZE: DwgA	G.O. / ITEM / SHEET: 3 of 28

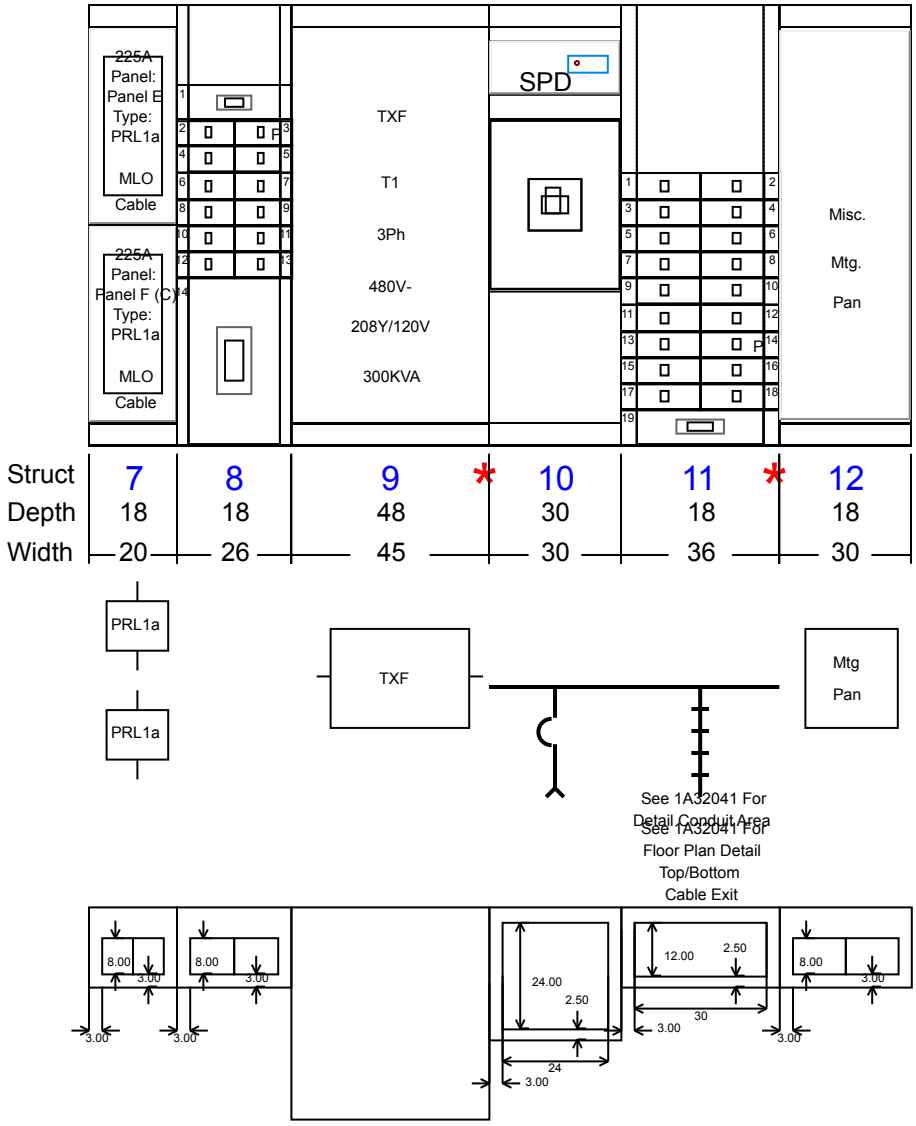

Structure	7	8	9	10	11	12
Ship-Inches			91.00		66.00	
Ship-MM			2311		1676	
Wdth-Inches	20.00	26.00	45.00	30.00	36.00	30.00
Wdth-MM	508	660	1143	762	914	762
Depth(Inner)-In.	18.00	18.00	48.00	30.00	18.00	18.00
Depth(Inner)-MM	457	457	1219	762	457	457
Depth(Outer)-In.	18.00	18.00	48.00	30.00	18.00	18.00
Depth(Outer)-MM	457	457	1219	762	457	457
Height-Inches	90.00	90.00	90.00	90.00	90.00	90.00
Height-MM	2286	2286	2286	2286	2286	2286
Weight-Lbs.(Est.)	725	327	750	582	552	275
Weight-Kg.(Est.)	328	148	340	263	250	124

The information on this document is created by Eaton Corporation. It is disclosed in confidence and it is only to be used for the purpose in which it is supplied.

PREPARED BY: DAWSON AMY	DATE: 4/21/2017	Eaton	SumterSC
APPROVED BY	DATE	JOB NAME: 2017 MENARDS STORE GEAR	
		DESIGNATION: STANDARD	
VERSION: 8.0.18.0		TYPE: Switchboards	DRAWING TYPE: CustAppr
NEG-ALT Number: MP510513X6K1-0000	REVISION: 1	DWG SIZE: DwgA	G.O. / ITEM / SHEET: 4 of 28

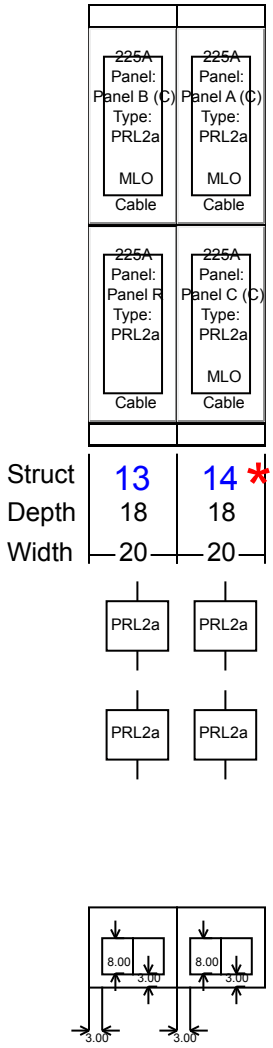

Total of 14 Structures, Total Weight of 8581 Weight-Lbs.
Total of 14 Structures, Total Width of 357 Inches

Structure	13	14				
Ship-Inches Ship-MM		70.00 1778				
Wdth-Inches Wdth-MM	20.00 508	20.00 508				
Depth(Inner)-In. Depth(Inner)-MM	18.00 457	18.00 457				
Depth(Outer)-In. Depth(Outer)-MM	18.00 457	18.00 457				
Height-Inches Height-MM	90.00 2286	90.00 2286				
Weight-Lbs.(Est.) Weight-Kg.(Est.)	725 328	975 442				

The information on this document is created by Eaton Corporation. It is disclosed in confidence and it is only to be used for the purpose in which it is supplied.

PREPARED BY: DAWSON AMY	DATE: 4/21/2017	Eaton	SumterSC
APPROVED BY	DATE	JOB NAME: 2017 MENARDS STORE GEAR	
		DESIGNATION: STANDARD	
VERSION: 8.0.18.0		TYPE: Switchboards	DRAWING TYPE: CustAppr
NEG-ALT Number: MP510513X6K1-0000	REVISION: 1	DWG SIZE: DwgA	G.O. / ITEM / SHEET: 5 of 28

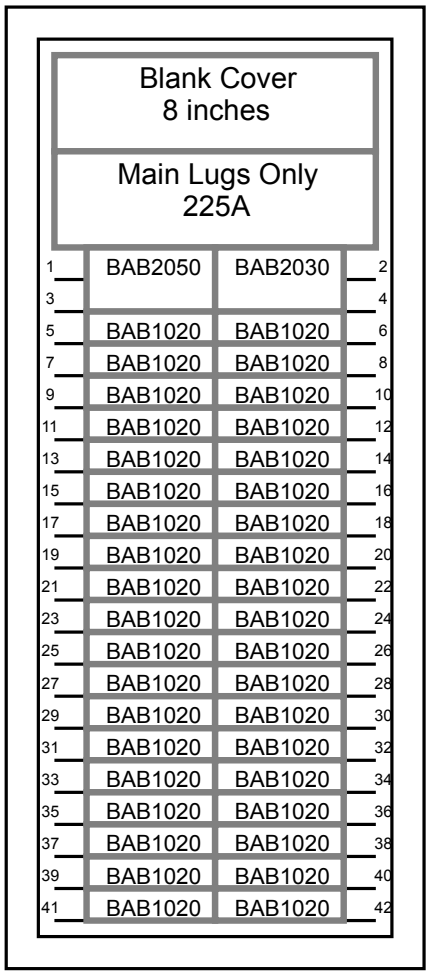

General Information **(Section 1 of 1)**

Service Voltage: 208Y/120V 3Ph 4W **Enclosure:** None
Bus Rating & Type: 225A Aluminum **Neutral Rating:** 225A
Ground Bar: Std. Bolted Aluminum, Al or Cu cable
S.C. Rating: 10k A.I.C. Fully Rated

Main Device Type: Main Lugs Only - Top Cable Entry
Main Terminals: Mechanical - (1) #6-300 kcmil (Cu/Al)
Neutral Terminals: Mechanical - (1) #6-300 kcmil (Cu/Al)
Box Catalog No.:
Trim: Standard Trim, IFS (IFS)

Mounted

Box Dimensions: 48.00" [1219.2mm]H x 0.00" [0.0mm]W x " [0.0mm]D
Min. Gutter Size: Top = " [0.0mm] Bottom = " [0.0mm]
Left = " [0.0mm] Right = " [0.0mm]

Panel ID Nameplate: **(1) Panel T**
Type: Plastic, adhesive-backed **(2) 208Y/120V 3Ph 4W**
Color: White with Black Letters **(3)**

UL

Circuit Directory: Metal Frame with Plastic Cover

Device Modifications:

Ref #	Description

Notes:

Branch Devices

Qty	Poles	Trip	Frame	Amps	kAIC
38	1	20	BAB	100	10
1	2	50	BAB	100	10
1	2	30	BAB	100	10

The information on this document is created by Eaton Corporation. It is disclosed in confidence and it is only to be used for the purpose in which it is supplied.

PREPARED BY: DAWSON AMY	DATE: 4/21/2017	**Eaton**	SumterSC
APPROVED BY	DATE	JOB NAME: 2017 MENARDS STORE GEAR	
		DESIGNATION: Panel T	
VERSION: 8.0.18.0		TYPE: IPRL1a	DRAWING TYPE: CustAppr
NEG-ALT Number: MP510513X6K1-0000	REVISION: 1	DWG SIZE: DwgA	G.O. / ITEM / SHEET: 6 of 28

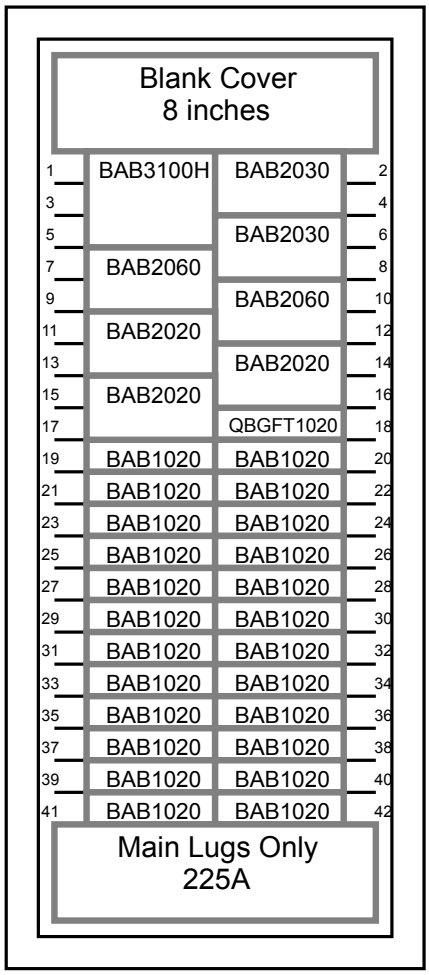

General Information **(Section 1 of 1)**

Service Voltage: 208Y/120V 3Ph 4W **Enclosure:** None
Bus Rating & Type: 225A Aluminum **Neutral Rating:** 225A
Ground Bar: Std. Bolted Aluminum, Al or Cu cable
S.C. Rating: 10k A.I.C. Fully Rated

Main Device Type: Main Lugs Only - Bottom Cable Entry
Main Terminals: Mechanical - (1) #6-300 kcmil (Cu/Al)
Neutral Terminals: Mechanical - (1) #6-300 kcmil (Cu/Al)
Box Catalog No.:
Trim: Standard Trim, IFS (IFS)

Mounted

Box Dimensions: 48.00" [1219.2mm]H x 0.00" [0.0mm]W x " [0.0mm]D
Min. Gutter Size: Top = " [0.0mm] Bottom = " [0.0mm]
Left = " [0.0mm] Right = " [0.0mm]

Panel ID Nameplate: **(1) Panel H**
Type: Plastic, adhesive-backed **(2) 208Y/120V 3Ph 4W**
Color: White with Black Letters **(3)**

NEC Lighting & Appliance, UL CTL *****Non-Interchangeable Main Device*****

Circuit Directory: Metal Frame with Plastic Cover

Device Modifications:

Ref #	Description

Notes:

Branch Devices

Qty	Poles	Trip	Frame	Amps	kAIC
1	3	100	BAB	100	10
3	2	20	BAB	100	10
24	1	20	BAB	100	10
2	2	60	BAB	100	10
2	2	30	BAB	100	10
1	1	20	QBGFT	100	10

The information on this document is created by Eaton Corporation. It is disclosed in confidence and it is only to be used for the purpose in which it is supplied.

PREPARED BY: DAWSON AMY	DATE: 4/21/2017	**Eaton**	SumterSC
APPROVED BY	DATE	JOB NAME: 2017 MENARDS STORE GEAR	
		DESIGNATION: Panel H	
VERSION: 8.0.18.0		TYPE: IPRL1a	DRAWING TYPE: CustAppr
NEG-ALT Number: MP510513X6K1-0000	REVISION: 1	DWG SIZE: DwgA	G.O. / ITEM / SHEET: 7 of 28

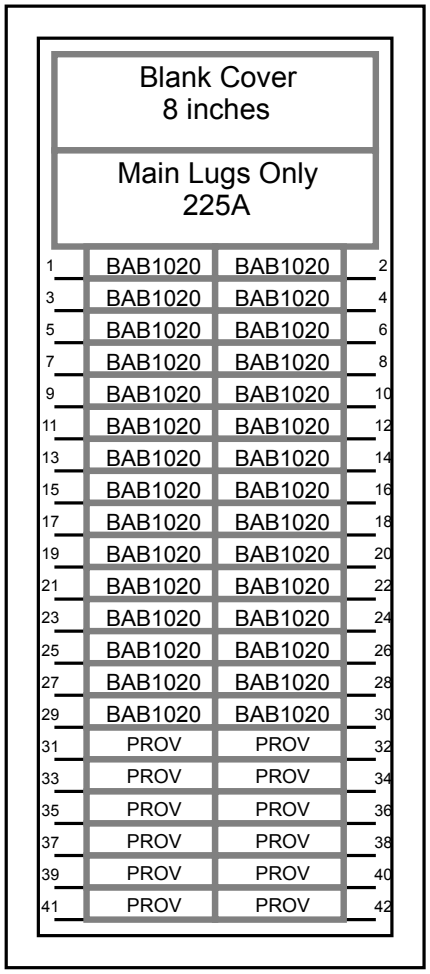

General Information **(Section 1 of 1)**

Service Voltage: 208Y/120V 3Ph 4W **Enclosure:** None
Bus Rating & Type: 225A Aluminum **Neutral Rating:** 225A
Ground Bar: Insulated / Isolated Copper, Cu cable only
S.C. Rating: 10k A.I.C. Fully Rated

Main Device Type: Main Lugs Only - Top Cable Entry
Main Terminals: Mechanical - (1) #6-300 kcmil (Cu/Al)
Neutral Terminals: Mechanical - (1) #6-300 kcmil (Cu/Al)
Box Catalog No.:
Trim: Standard Trim, IFS (IFS)

Mounted

Box Dimensions: 48.00" [1219.2mm]H x 0.00" [0.0mm]W x " [0.0mm]D
Min. Gutter Size: Top = " [0.0mm] Bottom = " [0.0mm]
Left = " [0.0mm] Right = " [0.0mm]

Panel ID Nameplate: **(1) Panel J**
Type: Plastic, adhesive-backed **(2) 208Y/120V 3Ph 4W**
Color: White with Black Letters **(3)**

NEC Lighting & Appliance, UL CTL *****Non-Interchangeable Main Device*****

Circuit Directory: Metal Frame with Plastic Cover

Device Modifications:

Ref #	Description

Notes:

Branch Devices

Qty	Poles	Trip	Frame	Amps	kAIC
30	1	20	BAB	100	10
12	1		PROV		

The information on this document is created by Eaton Corporation. It is disclosed in confidence and it is only to be used for the purpose in which it is supplied.

PREPARED BY: DAWSON AMY	DATE: 4/21/2017	**Eaton**	SumterSC
APPROVED BY	DATE	JOB NAME: 2017 MENARDS STORE GEAR	
		DESIGNATION: Panel J	
VERSION: 8.0.18.0		TYPE: IPRL1a	DRAWING TYPE: CustAppr
NEG-ALT Number: MP510513X6K1-0000	REVISION: 1	DWG SIZE: DwgA	G.O. / ITEM / SHEET: 8 of 28

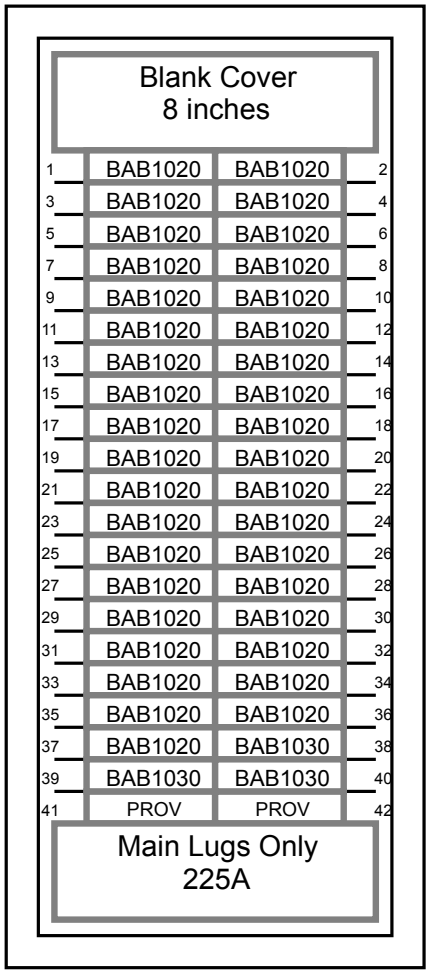

General Information **(Section 1 of 1)**

Service Voltage: 208Y/120V 3Ph 4W **Enclosure:** None
Bus Rating & Type: 225A Aluminum **Neutral Rating:** 225A
Ground Bar: Insulated / Isolated Copper, Cu cable only
S.C. Rating: 10k A.I.C. Fully Rated

Main Device Type: Main Lugs Only - Bottom Cable Entry
Main Terminals: Mechanical - (1) #6-300 kcmil (Cu/Al)
Neutral Terminals: Mechanical - (1) #6-300 kcmil (Cu/Al)
Box Catalog No.:
Trim: Standard Trim, IFS (IFS)

Mounted

Box Dimensions: 48.00" [1219.2mm]H x 0.00" [0.0mm]W x " [0.0mm]D
Min. Gutter Size: Top = " [0.0mm] Bottom = " [0.0mm]
Left = " [0.0mm] Right = " [0.0mm]

Panel ID Nameplate: **(1) Panel K**
Type: Plastic, adhesive-backed **(2) 208Y/120V 3Ph 4W**
Color: White with Black Letters **(3)**

NEC Lighting & Appliance, UL CTL *****Non-Interchangeable Main Device*****

Circuit Directory: Metal Frame with Plastic Cover

Device Modifications:

Ref #	Description

Notes:

Branch Devices

Qty	Poles	Trip	Frame	Amps	kAIC
37	1	20	BAB	100	10
3	1	30	BAB	100	10
2	1		PROV		

The information on this document is created by Eaton Corporation. It is disclosed in confidence and it is only to be used for the purpose in which it is supplied.

PREPARED BY: DAWSON AMY	DATE: 4/21/2017	**Eaton**	SumterSC
APPROVED BY	DATE	JOB NAME: 2017 MENARDS STORE GEAR	
		DESIGNATION: Panel K	
VERSION: 8.0.18.0		TYPE: IPRL1a	DRAWING TYPE: CustAppr
NEG-ALT Number: MP510513X6K1-0000	REVISION: 1	DWG SIZE: DwgA	G.O. / ITEM / SHEET: 9 of 28

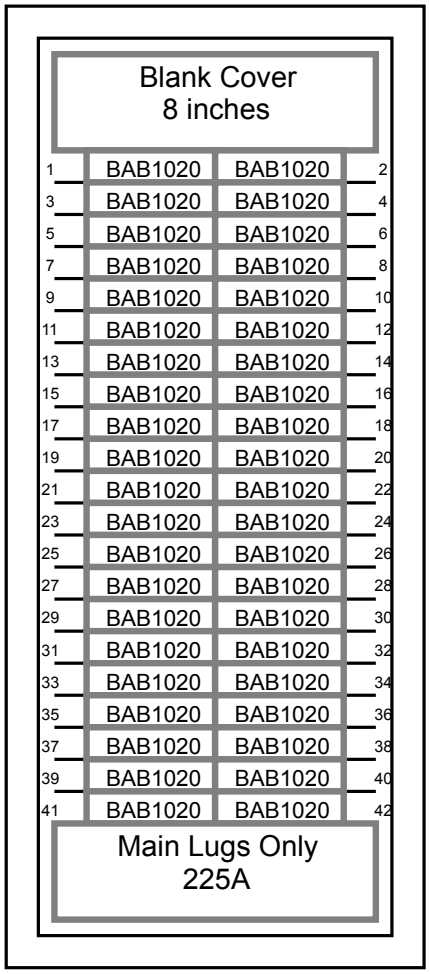

General Information **(Section 1 of 1)**

Service Voltage: 208Y/120V 3Ph 4W **Enclosure:** None
Bus Rating & Type: 225A Aluminum **Neutral Rating:** 225A
Ground Bar: Std. Bolted Copper, Cu cable only
S.C. Rating: 10k A.I.C. Fully Rated

Main Device Type: Main Lugs Only - Bottom Cable Entry
Main Terminals: Mechanical - (1) #6-300 kcmil (Cu/Al)
Neutral Terminals: Mechanical - (1) #6-300 kcmil (Cu/Al)
Box Catalog No.:
Trim: Standard Trim, IFS (IFS)

Mounted

Box Dimensions: 48.00" [1219.2mm]H x 0.00" [0.0mm]W x " [0.0mm]D
Min. Gutter Size: Top = " [0.0mm] Bottom = " [0.0mm]
Left = " [0.0mm] Right = " [0.0mm]

Panel ID Nameplate: **(1) Panel P (C)**
Type: Plastic, adhesive-backed **(2) 208Y/120V 3Ph 4W**
Color: White with Black Letters **(3)**

NEC Lighting & Appliance, UL CTL *****Non-Interchangeable Main Device*****

Circuit Directory: Metal Frame with Plastic Cover

Device Modifications:

Ref #	Description

Notes:

Branch Devices

Qty	Poles	Trip	Frame	Amps	kAIC
42	1	20	BAB	100	10

The information on this document is created by Eaton Corporation. It is disclosed in confidence and it is only to be used for the purpose in which it is supplied.

PREPARED BY: DAWSON AMY	DATE: 4/21/2017	**Eaton**	SumterSC
APPROVED BY	DATE	JOB NAME: 2017 MENARDS STORE GEAR	
		DESIGNATION: Panel P (C)	
VERSION: 8.0.18.0		TYPE: IPRL1a	DRAWING TYPE: CustAppr
NEG-ALT Number: MP510513X6K1-0000	REVISION: 1	DWG SIZE: DwgA	G.O. / ITEM / SHEET: 10 of 28

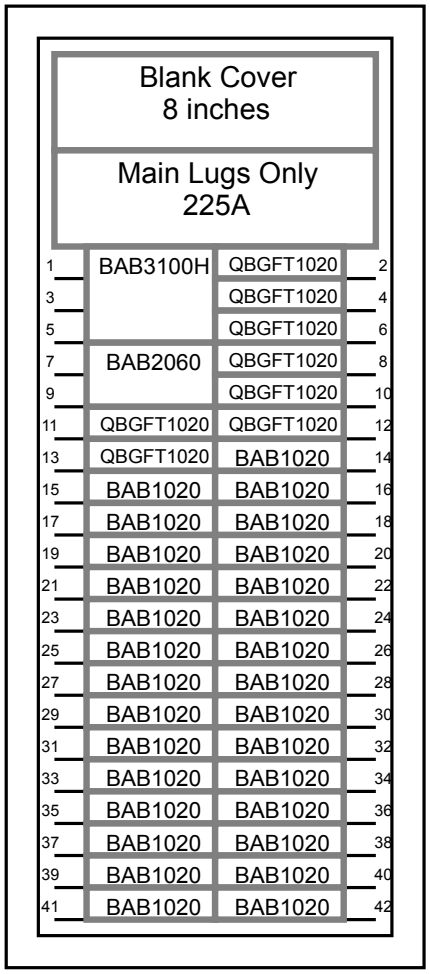

General Information **(Section 1 of 1)**

Service Voltage: 208Y/120V 3Ph 4W **Enclosure:** None
Bus Rating & Type: 225A Aluminum **Neutral Rating:** 225A
Ground Bar: Std. Bolted Copper, Cu cable only
S.C. Rating: 22k A.I.C. Series Rated

Main Device Type: MLO-Upstream ED - Top Cable Entry
Main Terminals: Mechanical - (1) #6-300 kcmil (Cu/Al)
Neutral Terminals: Mechanical - (1) #6-300 kcmil (Cu/Al)
Box Catalog No.:
Trim: Standard Trim, IFS (IFS)

Mounted

Box Dimensions: 48.00" [1219.2mm]H x 0.00" [0.0mm]W x " [0.0mm]D
Min. Gutter Size: Top = " [0.0mm] Bottom = " [0.0mm]
Left = " [0.0mm] Right = " [0.0mm]

Panel ID Nameplate: **(1) Panel I**
Type: Plastic, adhesive-backed **(2) 208Y/120V 3Ph 4W**
Color: White with Black Letters **(3)**

NEC Lighting & Appliance, UL CTL *****Non-Interchangeable Main Device*****

Circuit Directory: Metal Frame with Plastic Cover

Device Modifications:

Ref #	Description

Notes:

Branch Devices

Qty	Poles	Trip	Frame	Amps	kAIC
29	1	20	BAB	100	22
1	3	100	BAB	100	22
8	1	20	QBGFT	100	22
1	2	60	BAB	100	22

Main Devices

Qty	Poles	Trip	Frame	Amps	kAIC
1	0	N/A			22

The information on this document is created by Eaton Corporation. It is disclosed in confidence and it is only to be used for the purpose in which it is supplied.

PREPARED BY: DAWSON AMY	DATE: 4/21/2017	**Eaton**	SumterSC
APPROVED BY	DATE	JOB NAME: 2017 MENARDS STORE GEAR	
		DESIGNATION: Panel I	
VERSION: 8.0.18.0		TYPE: IPRL1a	DRAWING TYPE: CustAppr
NEG-ALT Number: MP510513X6K1-0000	REVISION: 1	DWG SIZE: DwgA	G.O. / ITEM / SHEET: 11 of 28

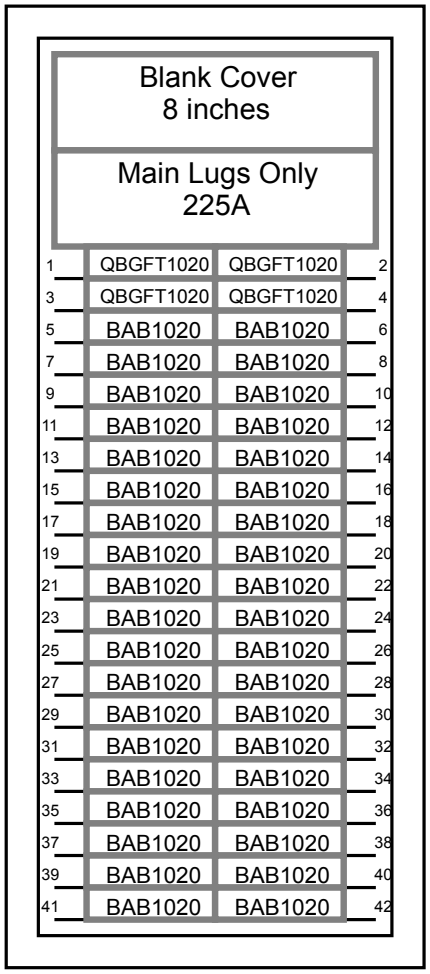

General Information **(Section 1 of 1)**

Service Voltage: 208Y/120V 3Ph 4W **Enclosure:** None
Bus Rating & Type: 225A Aluminum **Neutral Rating:** 225A
Ground Bar: Std. Bolted Copper, Cu cable only
S.C. Rating: 10k A.I.C. Fully Rated

Main Device Type: Main Lugs Only - Top Cable Entry
Main Terminals: Mechanical - (1) #6-300 kcmil (Cu/Al)
Neutral Terminals: Mechanical - (1) #6-300 kcmil (Cu/Al)
Box Catalog No.:
Trim: Standard Trim, IFS (IFS)

Mounted

Box Dimensions: 48.00" [1219.2mm]H x 0.00" [0.0mm]W x " [0.0mm]D
Min. Gutter Size: Top = " [0.0mm] Bottom = " [0.0mm]
Left = " [0.0mm] Right = " [0.0mm]

Panel ID Nameplate: **(1) Panel N (C)**
Type: Plastic, adhesive-backed **(2) 208Y/120V 3Ph 4W**
Color: White with Black Letters **(3)**

NEC Lighting & Appliance, UL CTL *****Non-Interchangeable Main Device*****

Circuit Directory: Metal Frame with Plastic Cover

Device Modifications:

Ref #	Description

Notes:

Branch Devices

Qty	Poles	Trip	Frame	Amps	kAIC
38	1	20	BAB	100	10
4	1	20	QBGFT	100	10

The information on this document is created by Eaton Corporation. It is disclosed in confidence and it is only to be used for the purpose in which it is supplied.

PREPARED BY: DAWSON AMY	DATE: 4/21/2017	**Eaton**	SumterSC
APPROVED BY	DATE	JOB NAME: 2017 MENARDS STORE GEAR	
		DESIGNATION: Panel N (C)	
VERSION: 8.0.18.0		TYPE: IPRL1a	DRAWING TYPE: CustAppr
NEG-ALT Number: MP510513X6K1-0000	REVISION: 1	DWG SIZE: DwgA	G.O. / ITEM / SHEET: 12 of 28

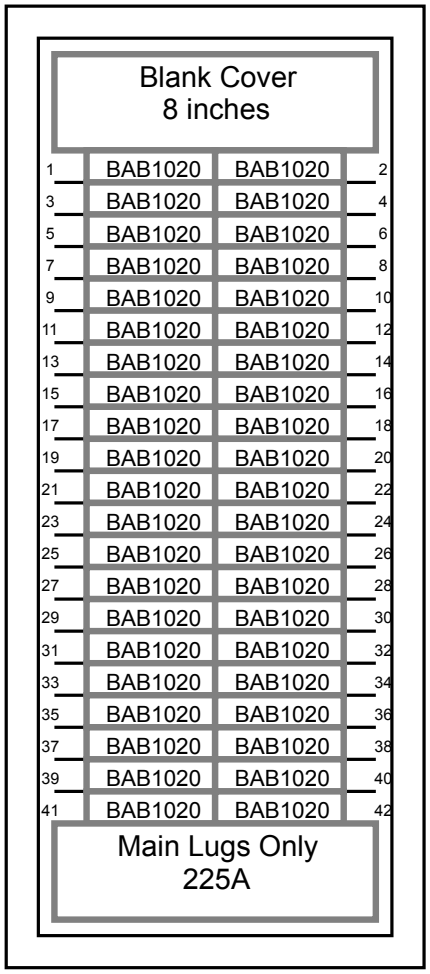

General Information **(Section 1 of 1)**

Service Voltage: 208Y/120V 3Ph 4W **Enclosure:** None
Bus Rating & Type: 225A Aluminum **Neutral Rating:** 225A
Ground Bar: Std. Bolted Copper, Cu cable only
S.C. Rating: 10k A.I.C. Fully Rated

Main Device Type: Main Lugs Only - Bottom Cable Entry
Main Terminals: Mechanical - (1) #6-300 kcmil (Cu/Al)
Neutral Terminals: Mechanical - (1) #6-300 kcmil (Cu/Al)
Box Catalog No.:
Trim: Standard Trim, IFS (IFS)

Mounted

Box Dimensions: 48.00" [1219.2mm]H x 0.00" [0.0mm]W x " [0.0mm]D
Min. Gutter Size: Top = " [0.0mm] Bottom = " [0.0mm]
Left = " [0.0mm] Right = " [0.0mm]

Panel ID Nameplate: **(1) Panel L (C)**
Type: Plastic, adhesive-backed **(2) 208Y/120V 3Ph 4W**
Color: White with Black Letters **(3)**

NEC Lighting & Appliance, UL CTL *****Non-Interchangeable Main Device*****

Circuit Directory: Metal Frame with Plastic Cover

Device Modifications:

Ref #	Description

Notes:

Branch Devices

Qty	Poles	Trip	Frame	Amps	kAIC
42	1	20	BAB	100	10

The information on this document is created by Eaton Corporation. It is disclosed in confidence and it is only to be used for the purpose in which it is supplied.

PREPARED BY: DAWSON AMY	DATE: 4/21/2017	**Eaton**	SumterSC
APPROVED BY	DATE	JOB NAME: 2017 MENARDS STORE GEAR	
		DESIGNATION: Panel L (C)	
VERSION: 8.0.18.0		TYPE: IPRL1a	DRAWING TYPE: CustAppr
NEG-ALT Number: MP510513X6K1-0000	REVISION: 1	DWG SIZE: DwgA	G.O. / ITEM / SHEET: 13 of 28

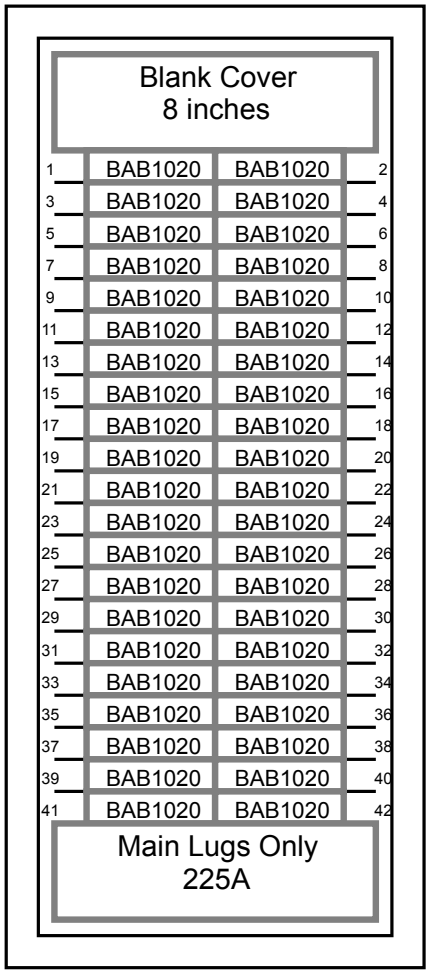

General Information **(Section 1 of 1)**

Service Voltage: 208Y/120V 3Ph 4W **Enclosure:** None
Bus Rating & Type: 225A Aluminum **Neutral Rating:** 225A
Ground Bar: Std. Bolted Copper, Cu cable only
S.C. Rating: 10k A.I.C. Fully Rated

Main Device Type: Main Lugs Only - Bottom Cable Entry
Main Terminals: Mechanical - (1) #6-300 kcmil (Cu/Al)
Neutral Terminals: Mechanical - (1) #6-300 kcmil (Cu/Al)
Box Catalog No.:
Trim: Standard Trim, IFS (IFS)

Mounted

Box Dimensions: 48.00" [1219.2mm]H x 0.00" [0.0mm]W x " [0.0mm]D
Min. Gutter Size: Top = " [0.0mm] Bottom = " [0.0mm]
Left = " [0.0mm] Right = " [0.0mm]

Panel ID Nameplate: **(1) Panel M (C)**
Type: Plastic, adhesive-backed **(2) 208Y/120V 3Ph 4W**
Color: White with Black Letters **(3)**

NEC Lighting & Appliance, UL CTL *****Non-Interchangeable Main Device*****

Circuit Directory: Metal Frame with Plastic Cover

Device Modifications:

Ref #	Description

Notes:

Branch Devices

Qty	Poles	Trip	Frame	Amps	kAIC
42	1	20	BAB	100	10

The information on this document is created by Eaton Corporation. It is disclosed in confidence and it is only to be used for the purpose in which it is supplied.

PREPARED BY: DAWSON AMY	DATE: 4/21/2017	**Eaton**	SumterSC
APPROVED BY	DATE	JOB NAME: 2017 MENARDS STORE GEAR	
		DESIGNATION: Panel M (C)	
VERSION: 8.0.18.0		TYPE: IPRL1a	DRAWING TYPE: CustAppr
NEG-ALT Number: MP510513X6K1-0000	REVISION: 1	DWG SIZE: DwgA	G.O. / ITEM / SHEET: 14 of 28

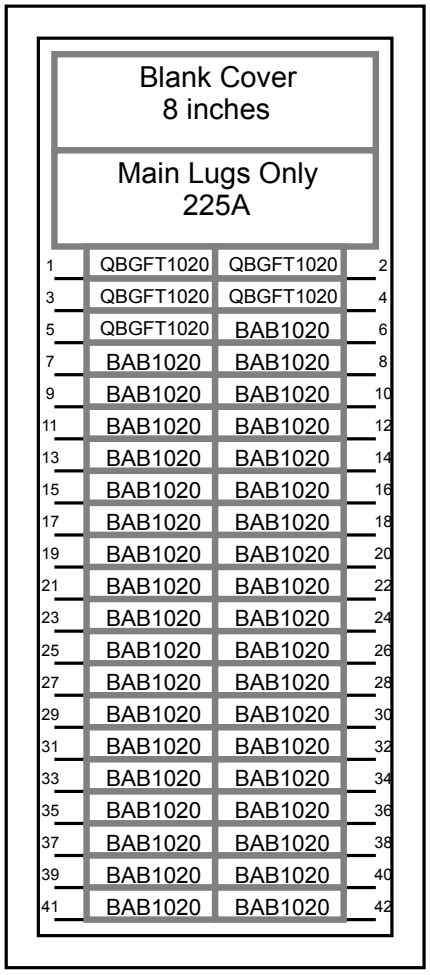

General Information **(Section 1 of 1)**

Service Voltage: 208Y/120V 3Ph 4W **Enclosure:** None
Bus Rating & Type: 225A Aluminum **Neutral Rating:** 225A
Ground Bar: Std. Bolted Copper, Cu cable only
S.C. Rating: 10k A.I.C. Fully Rated

Main Device Type: Main Lugs Only - Top Cable Entry
Main Terminals: Mechanical - (1) #6-300 kcmil (Cu/Al)
Neutral Terminals: Mechanical - (1) #6-300 kcmil (Cu/Al)
Box Catalog No.:
Trim: Standard Trim, IFS (IFS)

Mounted

Box Dimensions: 48.00" [1219.2mm]H x 0.00" [0.0mm]W x " [0.0mm]D
Min. Gutter Size: Top = " [0.0mm] Bottom = " [0.0mm]
Left = " [0.0mm] Right = " [0.0mm]

Panel ID Nameplate: **(1) Panel E**
Type: Plastic, adhesive-backed **(2) 208Y/120V 3Ph 4W**
Color: White with Black Letters **(3)**

NEC Lighting & Appliance, UL CTL *****Non-Interchangeable Main Device*****

Circuit Directory: Metal Frame with Plastic Cover

Device Modifications:

Ref #	Description

Notes:

Branch Devices

Qty	Poles	Trip	Frame	Amps	kAIC
37	1	20	BAB	100	10
5	1	20	QBGFT	100	10

The information on this document is created by Eaton Corporation. It is disclosed in confidence and it is only to be used for the purpose in which it is supplied.

PREPARED BY: DAWSON AMY	DATE: 4/21/2017	**Eaton**	SumterSC
APPROVED BY	DATE	JOB NAME: 2017 MENARDS STORE GEAR	
		DESIGNATION: Panel E	
VERSION: 8.0.18.0		TYPE: IPRL1a	DRAWING TYPE: CustAppr
NEG-ALT Number: MP510513X6K1-0000	REVISION: 1	DWG SIZE: DwgA	G.O. / ITEM / SHEET: 15 of 28

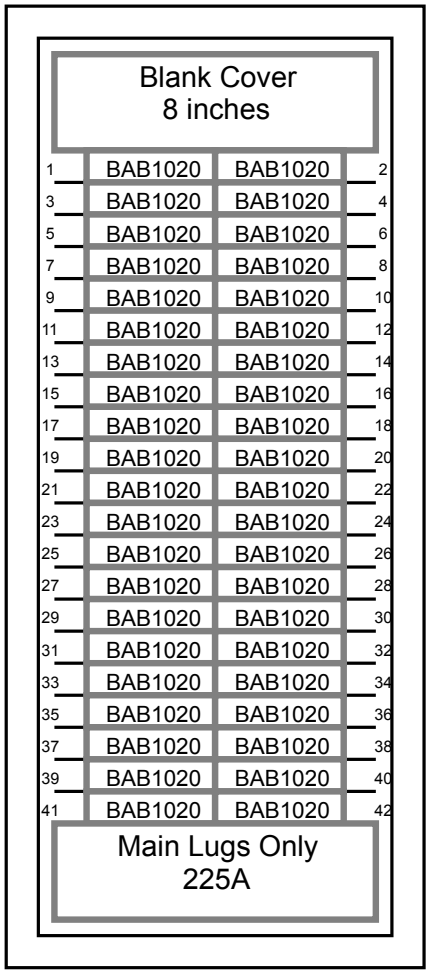

General Information **(Section 1 of 1)**

Service Voltage: 208Y/120V 3Ph 4W **Enclosure:** None
Bus Rating & Type: 225A Aluminum **Neutral Rating:** 225A
Ground Bar: Std. Bolted Copper, Cu cable only
S.C. Rating: 10k A.I.C. Fully Rated

Main Device Type: Main Lugs Only - Bottom Cable Entry
Main Terminals: Mechanical - (1) #6-300 kcmil (Cu/Al)
Neutral Terminals: Mechanical - (1) #6-300 kcmil (Cu/Al)
Box Catalog No.:
Trim: Standard Trim, IFS (IFS)

Mounted

Box Dimensions: 48.00" [1219.2mm]H x 0.00" [0.0mm]W x " [0.0mm]D
Min. Gutter Size: Top = " [0.0mm] Bottom = " [0.0mm]
Left = " [0.0mm] Right = " [0.0mm]

Panel ID Nameplate: **(1) Panel F (C)**
Type: Plastic, adhesive-backed **(2) 208Y/120V 3Ph 4W**
Color: White with Black Letters **(3)**

NEC Lighting & Appliance, UL CTL *****Non-Interchangeable Main Device*****

Circuit Directory: Metal Frame with Plastic Cover

Device Modifications:

Ref #	Description

Notes:

Branch Devices

Qty	Poles	Trip	Frame	Amps	kAIC
42	1	20	BAB	100	10

The information on this document is created by Eaton Corporation. It is disclosed in confidence and it is only to be used for the purpose in which it is supplied.

PREPARED BY: DAWSON AMY	DATE: 4/21/2017	**Eaton**	SumterSC
APPROVED BY	DATE	JOB NAME: 2017 MENARDS STORE GEAR	
		DESIGNATION: Panel F (C)	
VERSION: 8.0.18.0		TYPE: IPRL1a	DRAWING TYPE: CustAppr
NEG-ALT Number: MP510513X6K1-0000	REVISION: 1	DWG SIZE: DwgA	G.O. / ITEM / SHEET: 16 of 28

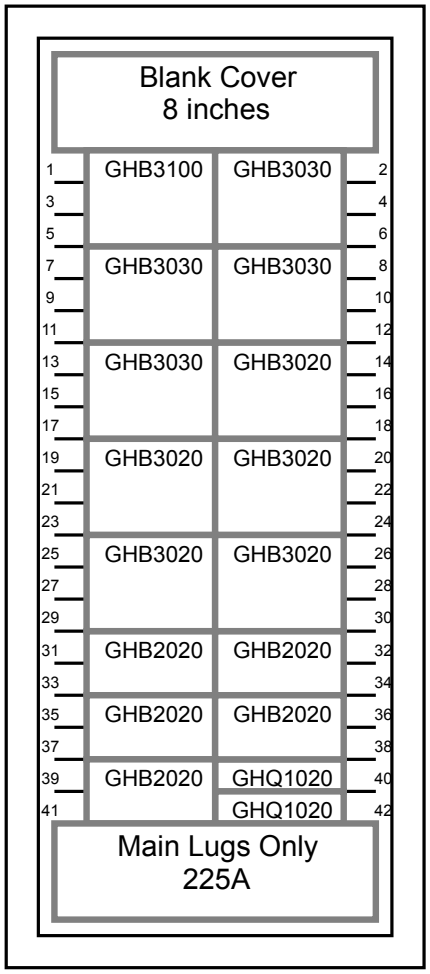

General Information **(Section 1 of 1)**

Service Voltage: 480Y/277V 3Ph 4W **Enclosure:** None
Bus Rating & Type: 225A Aluminum **Neutral Rating:** 225A
Ground Bar: Std. Bolted Copper, Cu cable only
S.C. Rating: 65k A.I.C. Series Rated

Main Device Type: MLO-Upstream HFD - Bottom Cable Entry
Main Terminals: Mechanical - (1) #6-300 kcmil (Cu/Al)
Neutral Terminals: Mechanical - (1) #6-300 kcmil (Cu/Al)
Box Catalog No.:
Trim: Standard Trim, IFS (IFS)

Mounted

Box Dimensions: 48.00" [1219.2mm]H x 0.00" [0.0mm]W x " [0.0mm]D
Min. Gutter Size: Top = " [0.0mm] Bottom = " [0.0mm]
Left = " [0.0mm] Right = " [0.0mm]

Panel ID Nameplate: **(1) Panel R**
Type: Plastic, adhesive-backed **(2) 480Y/277V 3Ph 4W**
Color: White with Black Letters **(3)**

UL *****Non-Interchangeable Main Device*****

Circuit Directory: Metal Frame with Plastic Cover

Device Modifications:

Ref #	Description
1373D62G01	Shunt Trip (120Vac)

Ckt #:1

Notes:

Branch Devices

Qty	Poles	Trip	Frame	Amps	kAIC
1	3	100	GHB	100	65
4	3	30	GHB	100	65
5	3	20	GHB	100	65
5	2	20	GHB	100	65
2	1	20	GHQ	100	65

Main Devices

Qty	Poles	Trip	Frame	Amps	kAIC
1	0	N/A			65

The information on this document is created by Eaton Corporation. It is disclosed in confidence and it is only to be used for the purpose in which it is supplied.

PREPARED BY: DAWSON AMY	DATE: 4/21/2017	**Eaton**	SumterSC
APPROVED BY	DATE	JOB NAME: 2017 MENARDS STORE GEAR	
		DESIGNATION: Panel R	
VERSION: 8.0.18.0		TYPE: IPRL2a	DRAWING TYPE: CustAppr
NEG-ALT Number: MP510513X6K1-0000	REVISION: 1	DWG SIZE: DwgA	G.O. / ITEM / SHEET: 17 of 28

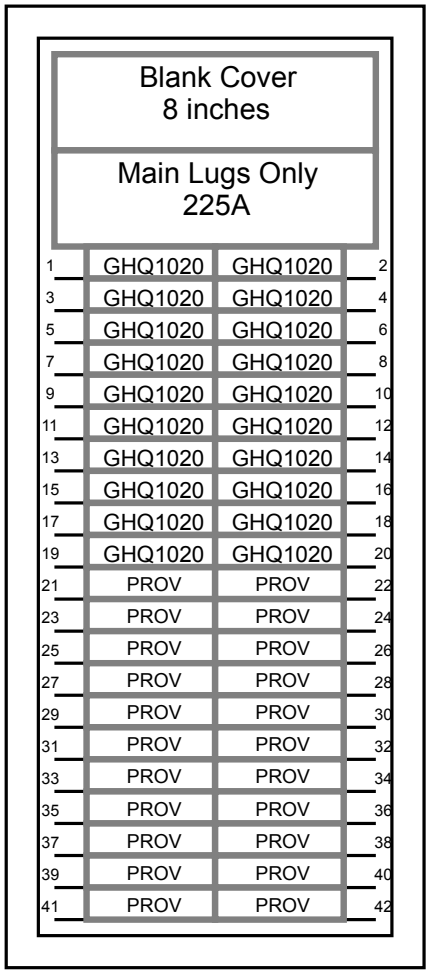

General Information **(Section 1 of 1)**

Service Voltage: 480Y/277V 3Ph 4W **Enclosure:** None
Bus Rating & Type: 225A Aluminum **Neutral Rating:** 225A
Ground Bar: Std. Bolted Copper, Cu cable only
S.C. Rating: 14k A.I.C. Fully Rated

Main Device Type: Main Lugs Only - Top Cable Entry
Main Terminals: Mechanical - (1) #6-300 kcmil (Cu/Al)
Neutral Terminals: Mechanical - (1) #6-300 kcmil (Cu/Al)
Box Catalog No.:
Trim: Standard Trim, IFS (IFS)

Mounted

Box Dimensions: 48.00" [1219.2mm]H x 0.00" [0.0mm]W x " [0.0mm]D
Min. Gutter Size: Top = " [0.0mm] Bottom = " [0.0mm]
Left = " [0.0mm] Right = " [0.0mm]

Panel ID Nameplate: **(1) Panel B (C)**
Type: Plastic, adhesive-backed **(2) 480Y/277V 3Ph 4W**
Color: White with Black Letters **(3)**

NEC Lighting & Appliance, UL CTL *****Non-Interchangeable Main Device*****

Circuit Directory: Metal Frame with Plastic Cover

Device Modifications:

Ref #	Description

Notes:

Branch Devices

Qty	Poles	Trip	Frame	Amps	kAIC
20	1	20	GHQ	100	14
22	1		PROV		

The information on this document is created by Eaton Corporation. It is disclosed in confidence and it is only to be used for the purpose in which it is supplied.

PREPARED BY: DAWSON AMY	DATE: 4/21/2017	**Eaton**	SumterSC
APPROVED BY	DATE	JOB NAME: 2017 MENARDS STORE GEAR	
		DESIGNATION: Panel B (C)	
VERSION: 8.0.18.0		TYPE: IPRL2a	DRAWING TYPE: CustAppr
NEG-ALT Number: MP510513X6K1-0000	REVISION: 1	DWG SIZE: DwgA	G.O. / ITEM / SHEET: 18 of 28

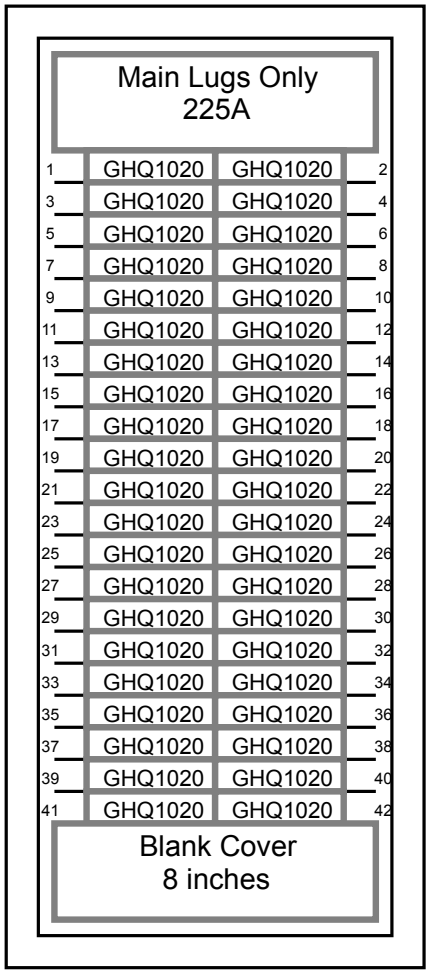

General Information **(Section 1 of 1)**

Service Voltage: 480Y/277V 3Ph 4W **Enclosure:** None
Bus Rating & Type: 225A Aluminum **Neutral Rating:** 225A
Ground Bar: Std. Bolted Copper, Cu cable only
S.C. Rating: 14k A.I.C. Fully Rated

Main Device Type: Main Lugs Only - Top Cable Entry
Main Terminals: Mechanical - (1) #6-300 kcmil (Cu/Al)
Neutral Terminals: Mechanical - (1) #6-300 kcmil (Cu/Al)
Box Catalog No.:
Trim: Standard Trim, IFS (IFS)

Mounted

Box Dimensions: 48.00" [1219.2mm]H x 0.00" [0.0mm]W x " [0.0mm]D
Min. Gutter Size: Top = " [0.0mm] Bottom = " [0.0mm]
Left = " [0.0mm] Right = " [0.0mm]

Panel ID Nameplate: **(1) Panel A (C)**
Type: Plastic, adhesive-backed **(2) 480Y/277V 3Ph 4W**
Color: White with Black Letters **(3)**

NEC Lighting & Appliance, UL CTL *****Non-Interchangeable Main Device*****

Circuit Directory: Metal Frame with Plastic Cover

Device Modifications:

Ref #	Description

Notes:

Branch Devices

Qty	Poles	Trip	Frame	Amps	kAIC
42	1	20	GHQ	100	14

The information on this document is created by Eaton Corporation. It is disclosed in confidence and it is only to be used for the purpose in which it is supplied.

PREPARED BY: DAWSON AMY	DATE: 4/21/2017	**Eaton**	SumterSC
APPROVED BY	DATE	JOB NAME: 2017 MENARDS STORE GEAR	
		DESIGNATION: Panel A (C)	
VERSION: 8.0.18.0		TYPE: IPRL2a	DRAWING TYPE: CustAppr
NEG-ALT Number: MP510513X6K1-0000	REVISION: 1	DWG SIZE: DwgA	G.O. / ITEM / SHEET: 19 of 28

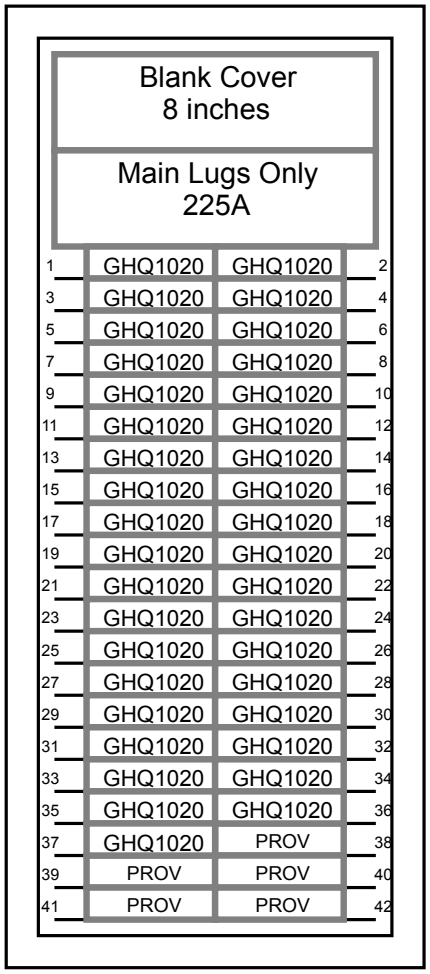

General Information **(Section 1 of 1)**

Service Voltage: 480Y/277V 3Ph 4W **Enclosure:** None
Bus Rating & Type: 225A Aluminum **Neutral Rating:** 225A
Ground Bar: Std. Bolted Copper, Cu cable only
S.C. Rating: 14k A.I.C. Fully Rated

Main Device Type: Main Lugs Only - Top Cable Entry
Main Terminals: Mechanical - (1) #6-300 kcmil (Cu/Al)
Neutral Terminals: Mechanical - (1) #6-300 kcmil (Cu/Al)
Box Catalog No.:
Trim: Standard Trim, IFS (IFS)

Mounted

Box Dimensions: 48.00" [1219.2mm]H x 0.00" [0.0mm]W x " [0.0mm]D
Min. Gutter Size: Top = " [0.0mm] Bottom = " [0.0mm]
Left = " [0.0mm] Right = " [0.0mm]

Panel ID Nameplate: **(1) Panel A (C)**
Type: Plastic, adhesive-backed **(2) 480Y/277V 3Ph 4W**
Color: White with Black Letters **(3)**

NEC Lighting & Appliance, UL CTL *****Non-Interchangeable Main Device*****

Circuit Directory: Metal Frame with Plastic Cover

Device Modifications:

Ref #	Description

Notes:

Branch Devices

Qty	Poles	Trip	Frame	Amps	kAIC
37	1	20	GHQ	100	14
5	1		PROV		

The information on this document is created by Eaton Corporation. It is disclosed in confidence and it is only to be used for the purpose in which it is supplied.

PREPARED BY: DAWSON AMY	DATE: 4/21/2017	**Eaton**	SumterSC
APPROVED BY	DATE	JOB NAME: 2017 MENARDS STORE GEAR	
		DESIGNATION: Panel A (C)	
VERSION: 8.0.18.0		TYPE: IPRL2a	DRAWING TYPE: CustAppr
NEG-ALT Number: MP510513X6K1-0000	REVISION: 1	DWG SIZE: DwgA	G.O. / ITEM / SHEET: 20 of 28

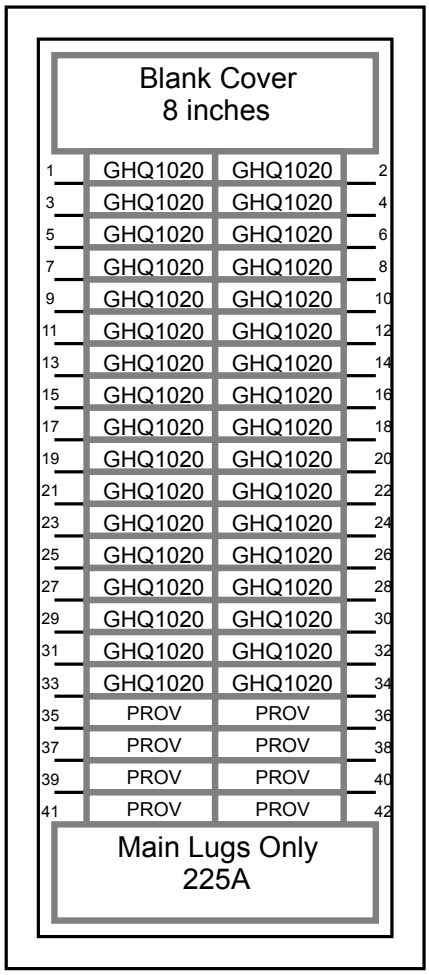

General Information **(Section 1 of 1)**

Service Voltage: 480Y/277V 3Ph 4W **Enclosure:** None
Bus Rating & Type: 225A Aluminum **Neutral Rating:** 225A
Ground Bar: Std. Bolted Aluminum, Al or Cu cable
S.C. Rating: 14k A.I.C. Fully Rated

Main Device Type: Main Lugs Only - Bottom Cable Entry
Main Terminals: Mechanical - (1) #6-300 kcmil (Cu/Al)
Neutral Terminals: Mechanical - (1) #6-300 kcmil (Cu/Al)
Box Catalog No.:
Trim: Standard Trim, IFS (IFS)

Mounted

Box Dimensions: 48.00" [1219.2mm]H x 0.00" [0.0mm]W x " [0.0mm]D
Min. Gutter Size: Top = " [0.0mm] Bottom = " [0.0mm]
Left = " [0.0mm] Right = " [0.0mm]

Panel ID Nameplate: **(1) Panel C (C)**
Type: Plastic, adhesive-backed **(2) 480Y/277V 3Ph 4W**
Color: White with Black Letters **(3)**

NEC Lighting & Appliance, UL CTL *****Non-Interchangeable Main Device*****

Circuit Directory: Metal Frame with Plastic Cover

Device Modifications:

Ref #	Description

Notes:

Branch Devices

Qty	Poles	Trip	Frame	Amps	kAIC
34	1	20	GHQ	100	14
8	1		PROV		

The information on this document is created by Eaton Corporation. It is disclosed in confidence and it is only to be used for the purpose in which it is supplied.

PREPARED BY: DAWSON AMY	DATE: 4/21/2017	**Eaton**	SumterSC
APPROVED BY	DATE	JOB NAME: 2017 MENARDS STORE GEAR	
		DESIGNATION: Panel C (C)	
VERSION: 8.0.18.0		TYPE: IPRL2a	DRAWING TYPE: CustAppr
NEG-ALT Number: MP510513X6K1-0000	REVISION: 1	DWG SIZE: DwgA	G.O. / ITEM / SHEET: 21 of 28

Switchboard Units Information

Str#	Unit	Description/Modifications	Nameplate
1		Panelboard Panel T, Type, PRL1a, 208Y/120V 3Ph 4W Panelboard Fed From PP1 3/200A Breaker (Structure 7)	Panel T 208Y/120V 3Ph 4W
		Panelboard Panel H, Type, PRL1a, 208Y/120V 3Ph 4W Panelboard Fed From PP2 3/150 Breaker (Structure 9)	Panel H 208Y/120V 3Ph 4W
2		Panelboard Panel J, Type, PRL1a, 208Y/120V 3Ph 4W Panelboard Fed From Panel PP2	Panel J 208Y/120V 3Ph 4W
		Panelboard Panel K, Type, PRL1a, 208Y/120V 3Ph 4W Panelboard Fed From Panel PP2	Panel K 208Y/120V 3Ph 4W
3		Panelboard Panel P (C), Type, PRL1a, 208Y/120V 3Ph 4W Panelboard Fed From Panel PP1	Panel P (C) 208Y/120V 3Ph 4W
		Panelboard Panel I, Type, PRL1a, 208Y/120V 3Ph 4W Panelboard Fed From Panel PP1	Panel I 208Y/120V 3Ph 4W
4		Panelboard Panel N (C), Type, PRL1a, 208Y/120V 3Ph 4W Panelboard Fed From Panel PP1	Panel N (C) 208Y/120V 3Ph 4W
		Panelboard Panel L (C), Type, PRL1a, 208Y/120V 3Ph 4W Panelboard Fed From Panel PP1	Panel L (C) 208Y/120V 3Ph 4W

The information on this document is created by Eaton Corporation. It is disclosed in confidence and it is only to be used for the purpose in which it is supplied.

5

Panelboard Panel M (C), Type, PRL1a, 208Y/120V 3Ph 4W
Panelboard Fed From Panel PP1

Panel M (C)
208Y/120V 3Ph 4W

Blank Steel Back Pan

6

Blank Steel Back Pan

1 Main Lugs -400 A Main Lugs Only

2 Feeder Breaker - Chassis Mtd-100A 3P [ED 225A Frame], Trip 100A., Thermal Mag
Terminals, Mechanical, (1) #14-1/0

Panel J

Neutral Terminal, (1) #14-1/0

3 Feeder Breaker - Chassis Mtd-100A 3P [ED 225A Frame], Trip 100A., Thermal Mag
Terminals, Mechanical, (1) #14-1/0

Panel K

Neutral Terminal, (1) #14-1/0

4 Feeder Breaker - Chassis Mtd-150A 3P [ED 225A Frame], Trip 150A., Thermal Mag
Terminals, Mechanical, (1) #4-4/0

Spare

Neutral Terminal, (1) #6-350 kcmil

5 Feeder Breaker - Chassis Mtd-150A 3P [ED 225A Frame], Trip 150A., Thermal Mag
Terminals, Mechanical, (1) #4-4/0

Panel H

Neutral Terminal, (1) #6-350 kcmil

7

Panelboard Panel E, Type, PRL1a, 208Y/120V 3Ph 4W
Panelboard Fed From Panel PP1

Panel E
208Y/120V 3Ph 4W

Panelboard Panel F (C), Type, PRL1a, 208Y/120V 3Ph 4W
Panelboard Fed From Panel PP1

Panel F (C)
208Y/120V 3Ph 4W

The information on this document is created by Eaton Corporation. It is disclosed in confidence and it is only to be used for the purpose in which it is supplied.

PREPARED BY: DAWSON AMY	DATE: 4/21/2017	**Eaton**	SumterSC	
APPROVED BY	DATE	JOB NAME: 2017 MENARDS STORE GEAR		
		DESIGNATION: STANDARD		
VERSION: 8.0.18.0		TYPE: Switchboards	DRAWING TYPE: CustAppr	
NEG-ALT Number: MP510513X6K1-0000	REVISION: 1 / DWG SIZE: DwgA	G.O.	ITEM	SHEET: 23 of 28

8

1	Feeder Breaker - Chassis Mtd-300A 3P [DK 400A Frame], Trip 300A., Thermal Mag Terminals, Mechanical, (1) 250-500 kcmil Neutral Terminal, (1) #4-500 kcmil	Panel PP2
2	Feeder Breaker - Chassis Mtd-100A 3P [ED 225A Frame], Trip 100A., Thermal Mag Terminals, Mechanical, (1) #14-1/0 Neutral Terminal, (1) #14-1/0	Panel G
3	Feeder Breaker - Chassis Mtd-3P [ED 225A Frame] Provision Neutral Terminal, (1) #6-350 kcmil	
4	Feeder Breaker - Chassis Mtd-200A 3P [ED 225A Frame], Trip 200A., Thermal Mag Terminals, Mechanical, (1) #4-4/0 Neutral Terminal, (1) #6-350 kcmil	Spare
5	Feeder Breaker - Chassis Mtd-200A 3P [ED 225A Frame], Trip 200A., Thermal Mag Terminals, Mechanical, (1) #4-4/0 Neutral Terminal, (1) #6-350 kcmil	Spare
6	Feeder Breaker - Chassis Mtd-200A 3P [ED 225A Frame], Trip 200A., Thermal Mag Terminals, Mechanical, (1) #4-4/0 Neutral Terminal, (1) #6-350 kcmil	Panel E
7	Feeder Breaker - Chassis Mtd-200A 3P [ED 225A Frame], Trip 200A., Thermal Mag Terminals, Mechanical, (1) #4-4/0 Neutral Terminal, (1) #6-350 kcmil	Panel T
8	Feeder Breaker - Chassis Mtd-200A 3P [ED 225A Frame], Trip 200A., Thermal Mag Terminals, Mechanical, (1) #4-4/0 Neutral Terminal, (1) #6-350 kcmil	Panel I
9	Feeder Breaker - Chassis Mtd-200A 3P [ED 225A Frame], Trip 200A., Thermal Mag Terminals, Mechanical, (1) #4-4/0 Neutral Terminal, (1) #6-350 kcmil	Panel F
10	Feeder Breaker - Chassis Mtd-200A 3P [ED 225A Frame], Trip 200A., Thermal Mag Terminals, Mechanical, (1) #4-4/0	Panel M

The information on this document is created by Eaton Corporation. It is disclosed in confidence and it is only to be used for the purpose in which it is supplied.

Neutral Terminal, (1) #6-350 kcmil

11 Feeder Breaker - Chassis Mtd-200A 3P [ED 225A Frame], Trip 200A., Thermal Mag
Terminals, Mechanical, (1) #4-4/0

Panel L

Neutral Terminal, (1) #6-350 kcmil

12 Feeder Breaker - Chassis Mtd-200A 3P [ED 225A Frame], Trip 200A., Thermal Mag
Terminals, Mechanical, (1) #4-4/0

Panel P

Neutral Terminal, (1) #6-350 kcmil

13 Feeder Breaker - Chassis Mtd-200A 3P [ED 225A Frame], Trip 200A., Thermal Mag
Terminals, Mechanical, (1) #4-4/0

Panel N

Neutral Terminal, (1) #6-350 kcmil

14 Main Breaker - Chassis Mtd-800A 3P [MDL 800A Frame], Vertically Mtd., Trip 800A., Thermal Mag
Terminals, Mechanical, (3) 3/0-400 kcmil

Main Breaker

Neutral Terminal, (3) #4-500 kcmil

9

Transformer T1, 3Ph 300 kVA, General Purpose, DOE 2016 Rated, 150 deg C Rise, Al windings
T1
Transformer Fed From: 300A/3P in Main Distribution

10

Main Breaker - Ind Mtd-1600A 3P [RD 1600A Frame], Trip 1600A., RMS310 LSG
Terminals, Mechanical, (5) 3/0-750 kcmil, Bottom
Shunt Trip: 110-125Vdc
Single Phase protection

Surge Protective Device -SPD Series 120kA SPD, Basic (Disconnect Included)

11

1 Feeder Breaker - Chassis Mtd-70A 3P [HFD 225A Frame], Trip 70A., Thermal Mag
Terminals, Mechanical, (1) #14-1/0

HVAC Unit 11

Neutral Terminal, (1) #14-1/0

2 Feeder Breaker - Chassis Mtd-60A 3P [HFD 225A Frame], Trip 60A., Thermal Mag
Terminals, Mechanical, (1) #14-1/0

Pylon Sign

Neutral Terminal, (1) #14-1/0

3	Feeder Breaker - Chassis Mtd-70A 3P [HFD 225A Frame], Trip 70A., Thermal Mag Terminals, Mechanical, (1) #14-1/0 Neutral Terminal, (1) #14-1/0	HVAC Unit 9
4	Feeder Breaker - Chassis Mtd-70A 3P [HFD 225A Frame], Trip 70A., Thermal Mag Terminals, Mechanical, (1) #14-1/0 Neutral Terminal, (1) #14-1/0	HVAC Unit 10
5	Feeder Breaker - Chassis Mtd-70A 3P [HFD 225A Frame], Trip 70A., Thermal Mag Terminals, Mechanical, (1) #14-1/0 Neutral Terminal, (1) #14-1/0	HVAC Unit 7
6	Feeder Breaker - Chassis Mtd-70A 3P [HFD 225A Frame], Trip 70A., Thermal Mag Terminals, Mechanical, (1) #14-1/0 Neutral Terminal, (1) #14-1/0	HVAC Unit 8
7	Feeder Breaker - Chassis Mtd-70A 3P [HFD 225A Frame], Trip 70A., Thermal Mag Terminals, Mechanical, (1) #14-1/0 Neutral Terminal, (1) #14-1/0	HVAC Unit 5
8	Feeder Breaker - Chassis Mtd-70A 3P [HFD 225A Frame], Trip 70A., Thermal Mag Terminals, Mechanical, (1) #14-1/0 Neutral Terminal, (1) #14-1/0	HVAC Unit 6
9	Feeder Breaker - Chassis Mtd-70A 3P [HFD 225A Frame], Trip 70A., Thermal Mag Terminals, Mechanical, (1) #14-1/0 Neutral Terminal, (1) #14-1/0	HVAC Unit 3
10	Feeder Breaker - Chassis Mtd-70A 3P [HFD 225A Frame], Trip 70A., Thermal Mag Terminals, Mechanical, (1) #14-1/0 Neutral Terminal, (1) #14-1/0	HVAC Unit 4
11	Feeder Breaker - Chassis Mtd-70A 3P [HFD 225A Frame], Trip 70A., Thermal Mag Terminals, Mechanical, (1) #14-1/0 Neutral Terminal, (1) #14-1/0	HVAC Unit 1
12	Feeder Breaker - Chassis Mtd-70A 3P [HFD 225A Frame], Trip 70A., Thermal Mag	HVAC Unit 2

Terminals, Mechanical, (1) #14-1/0

Neutral Terminal, (1) #14-1/0

13 Feeder Breaker - Chassis Mtd-200A 3P [HFD 225A Frame], Trip 200A., Thermal Mag
Terminals, Mechanical, (1) #4-4/0

Neutral Terminal, (1) #6-350 kcmil

Panel R

14 Feeder Breaker - Chassis Mtd-3P [HFD 225A Frame] Provision
Neutral Terminal, (1) #6-350 kcmil

15 Feeder Breaker - Chassis Mtd-100A 3P [HFD 225A Frame], Trip 100A., Thermal Mag
Terminals, Mechanical, (1) #14-1/0

Neutral Terminal, (1) #14-1/0

Panel W1

16 Feeder Breaker - Chassis Mtd-200A 3P [HFD 225A Frame], Trip 200A., Thermal Mag
Terminals, Mechanical, (1) #4-4/0

Neutral Terminal, (1) #6-350 kcmil

Panel A

17 Feeder Breaker - Chassis Mtd-200A 3P [HFD 225A Frame], Trip 200A., Thermal Mag
Terminals, Mechanical, (1) #4-4/0

Neutral Terminal, (1) #6-350 kcmil

Panel C

18 Feeder Breaker - Chassis Mtd-225A 3P [HFD 225A Frame], Trip 225A., Thermal Mag
Terminals, Mechanical, (1) #4-4/0

Neutral Terminal, (1) #6-350 kcmil

Panel B

19 Feeder Breaker - Chassis Mtd-400A 3P [HKD 400A Frame], Trip 400A., Thermal Mag
Terminals, Mechanical, (1) 2/0-500 kcmil

Neutral Terminal, (1) #4-500 kcmil

T1

12

Blank Steel Back Pan

13

Panelboard Panel R, Type, PRL2a, 480Y/277V 3Ph 4W
Panelboard Fed From 200A/3P Main Dist

Panel R
480Y/277V 3Ph 4W

Panelboard Panel B (C), Type, PRL2a, 480Y/277V 3Ph 4W
Panelboard Fed From 200A/3P Main Dist

Panel B (C)
480Y/277V 3Ph 4W

14

Panelboard Panel A (C), Type, PRL2a, 480Y/277V 3Ph 4W
Panelboard Fed From 200A/3P Main Dist

Panel A (C)
480Y/277V 3Ph 4W

Panelboard Panel A (C), Type, PRL2a, 480Y/277V 3Ph 4W
Panelboard Fed From 200A/3P Main Dist

Panel A (C)
480Y/277V 3Ph 4W

Panelboard Panel C (C), Type, PRL2a, 480Y/277V 3Ph 4W
Panelboard Fed From 200A/3P Main Dist

Panel C (C)
480Y/277V 3Ph 4W

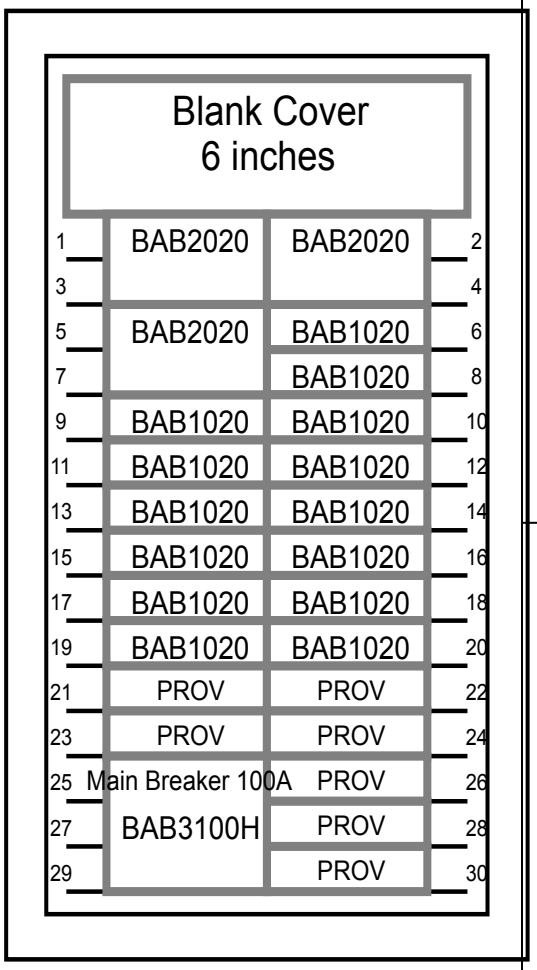

General Information **(Section 1 of 1)**

Service Voltage: 208Y/120V 3Ph 4W **Enclosure:** Type 1
Bus Rating & Type: 100A Aluminum **Neutral Rating:** 100A
Ground Bar: Std. Bolted Aluminum, Al or Cu cable
S.C. Rating: 10k A.I.C. Fully Rated

Main Device Type: Main Breaker - Bottom Cable Entry
Main Terminals: Mechanical - (1) #8-1/0 (Cu/Al)
Neutral Terminals: Mechanical - (1) #14-1/0 (Cu/Al)
Box Catalog No.: EZB2036R
Trim: EZ Trim, Door in Door, Concealed Hardware (EZT2036S)

Surface Mounted

Box Dimensions: 36.00" [914.4mm]H x 20.00" [508.0mm]W x 5.75" [146.1mm]D
Min. Gutter Size: Top = 5.5" [139.7mm] Bottom = 5.5" [139.7mm]
Left = 6.0" [152.4mm] Right = 6.0" [152.4mm]

Panel ID Nameplate: **(1) Panel W2**
Type: Plastic, adhesive-backed **(2) 208Y/120V 3Ph 4W**
Color: White with Black Letters **(3)**

NEC Lighting & Appliance, UL CTL *****Non-Interchangeable Main Device*****

Trim Lock: Standard Lock & Key (Keyed WEM2)
Circuit Directory: Plastic Sleeve with Card
Main Circuit Breaker Trip Type: Thermal-Magnetic.

Device Modifications:

Ref #	Description

Notes:

Branch Devices

Qty	Poles	Trip	Frame	Amps	kAIC
14	1	20	BAB	100	10
3	2	20	BAB	100	10
7	1		PROV		

Main Devices

Qty	Poles	Trip	Frame	Amps	kAIC
1	3	100	BAB-H	100	10

The information on this document is created by Eaton Corporation. It is disclosed in confidence and it is only to be used for the purpose in which it is supplied.

PREPARED BY: DAWSON AMY	DATE: 4/21/2017	**Eaton**	
APPROVED BY	DATE	JOB NAME: 2017 MENARDS STORE GEAR	
		DESIGNATION: Panel W2	
VERSION: 1.0.0.13		TYPE: PRL1a	DRAWING TYPE: Customer Approval
NEG-ALT Number: MP510513X6K1-0000	REVISION: 0 / DWG SIZE: A	G.O.	ITEM / SHEET: 1 of 1

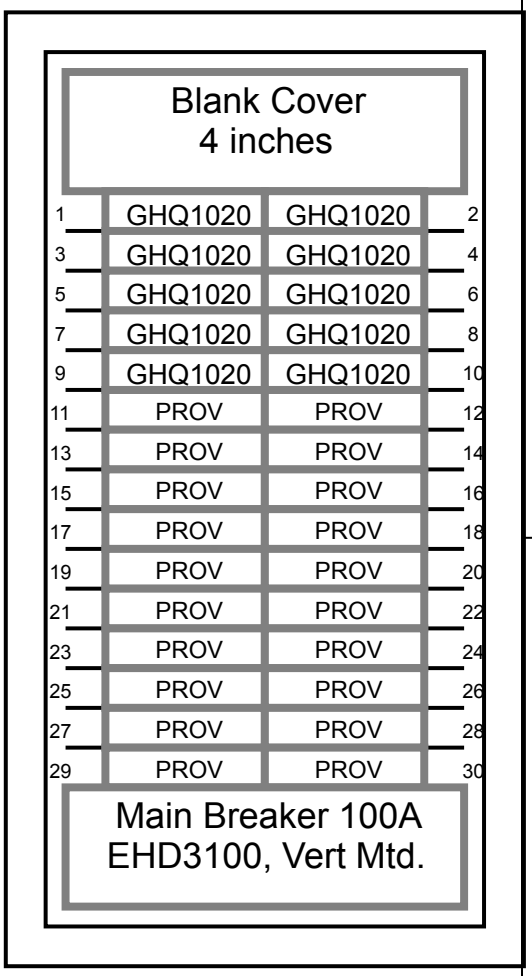

General Information **(Section 1 of 1)**

Service Voltage: 480Y/277V 3Ph 4W **Enclosure:** Type 1
Bus Rating & Type: 100A Aluminum **Neutral Rating:** 100A
Ground Bar: Std. Bolted Aluminum, Al or Cu cable
S.C. Rating: 14k A.I.C. Fully Rated

Main Device Type: Main Breaker - Bottom Cable Entry
Main Terminals: Mechanical - (1) #14-1/0 (Cu/Al)
Neutral Terminals: Mechanical - (1) #14-1/0 (Cu/Al)
Box Catalog No.: EZB2042R
Trim: EZ Trim, Door in Door, Concealed Hardware (EZT2042S)

Surface Mounted

Box Dimensions: 42.00" [1066.8mm]H x 20.00" [508.0mm]W x 5.75" [146.1mm]D
Min. Gutter Size: Top = 5.5" [139.7mm] Bottom = 5.5" [139.7mm]
Left = 5.75" [146.1mm] Right = 5.75" [146.1mm]

Panel ID Nameplate: **(1) Panel W1**
Type: Plastic, adhesive-backed **(2) 480Y/277V 3Ph 4W**
Color: White with Black Letters **(3)**

NEC Lighting & Appliance, UL CTL *****Non-Interchangeable Main Device*****

Trim Lock: Standard Lock & Key (Keyed WEM2)
Circuit Directory: Plastic Sleeve with Card
Main Circuit Breaker Trip Type: Thermal-Magnetic.

Device Modifications:

Ref #	Description

Notes:

Branch Devices

Qty	Poles	Trip	Frame	Amps	kAIC
10	1	20	GHQ	100	14
20	1		PROV		

Main Devices

Qty	Poles	Trip	Frame	Amps	kAIC
1	3	100	EHD	100	14

The information on this document is created by Eaton Corporation. It is disclosed in confidence and it is only to be used for the purpose in which it is supplied.

PREPARED BY: DAWSON AMY	DATE: 4/21/2017	**Eaton**	
APPROVED BY	DATE	JOB NAME: 2017 MENARDS STORE GEAR	
		DESIGNATION: Panel W1	
VERSION: 1.0.0.13		TYPE: PRL2a	DRAWING TYPE: Customer Approval
NEG-ALT Number: MP510513X6K1-0000	REVISION: 0 / DWG SIZE: A	G.O.	ITEM / SHEET: 1 of 1

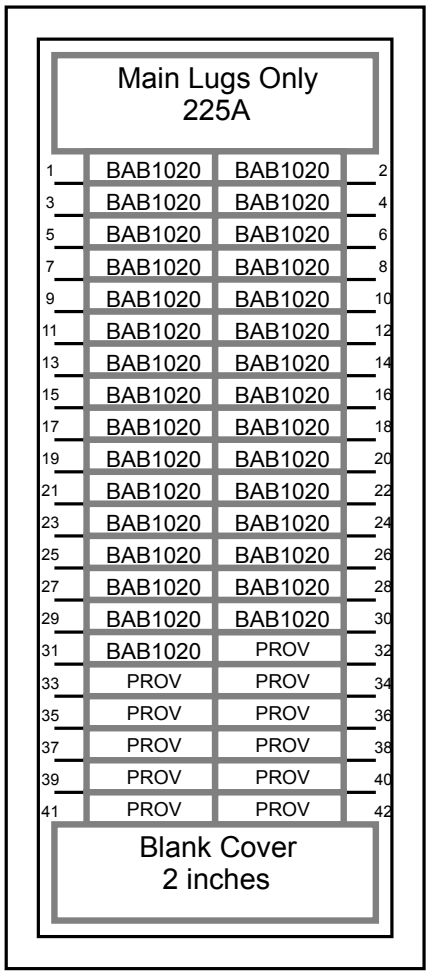

General Information **(Section 1 of 1)**

Service Voltage: 208Y/120V 3Ph 4W **Enclosure:** Type 1
Bus Rating & Type: 225A Aluminum **Neutral Rating:** 225A
Ground Bar: Std. Bolted Aluminum, Al or Cu cable
S.C. Rating: 10k A.I.C. Fully Rated

Main Device Type: Main Lugs Only - Top Cable Entry
Main Terminals: Mechanical - (1) #6-300 kcmil (Cu/Al)
Neutral Terminals: Mechanical - (1) #6-300 kcmil (Cu/Al)
Box Catalog No.: EZB2042R
Trim: EZ Trim, Door in Door, Concealed Hardware (EZT2042S)

Surface Mounted

Box Dimensions: 42.00" [1066.8mm]H x 20.00" [508.0mm]W x 5.75" [146.1mm]D
Min. Gutter Size: Top = 5.5" [139.7mm] Bottom = 5.5" [139.7mm]
Left = 6.0" [152.4mm] Right = 6.0" [152.4mm]

Panel ID Nameplate: **(1) Panel G**
Type: Plastic, adhesive-backed **(2) 208Y/120V 3Ph 4W**
Color: White with Black Letters **(3)**

NEC Lighting & Appliance, UL CTL *****Non-Interchangeable Main Device*****

Trim Lock: Standard Lock & Key (Keyed WEM2)
Circuit Directory: Plastic Sleeve with Card

Device Modifications:

Ref #	Description

Notes:

Branch Devices

Qty	Poles	Trip	Frame	Amps	kAIC
31	1	20	BAB	100	10
11	1		PROV		

The information on this document is created by Eaton Corporation. It is disclosed in confidence and it is only to be used for the purpose in which it is supplied.

PREPARED BY: DAWSON AMY	DATE: 4/21/2017	**Eaton**	
APPROVED BY	DATE	JOB NAME: 2017 MENARDS STORE GEAR	
		DESIGNATION: Panel G	
VERSION: 1.0.0.13		TYPE: PRL1a	DRAWING TYPE: Customer Approval
NEG-ALT Number: MP510513X6K1-0000	REVISION: 0	DWG SIZE: A	G.O. / ITEM / SHEET: 1 of 1

Safety Switch General Information

Global Specifications

System Voltage	600 VAC
Switch Type	Single Throw - Heavy Duty
Poles/Blades	3-Pole
Amperage	30
Protection	Fusible with Neutral
Enclosure Type	NEMA 3R
Special Paint	ANSI-61 (Gray) Standard
Fuse Clips	Standard
Switch Lugs	Standard
Fungus Proof Treatment	N
Lock-On Provision	N
Trapped Key Interlock	None
Fuse Pullers	N
Control Pole	N
Ground Lugs	N
Stainless Mechanism	N
Mill Duty	N

Nameplate

Safety Switch Catalog No.

DH361NRK

The information on this document is created by Eaton Corporation. It is disclosed in confidence and it is only to be used for the purpose in which it is supplied.

PREPARED BY: DAWSON AMY	DATE: 4/21/2017	**Eaton**			
APPROVED BY	DATE	JOB NAME: 2017 MENARDS STORE GEAR			
		DESIGNATION: Trash Compact			
VERSION: 1.0.0.1		TYPE: Safety Switch General Information		DRAWING TYPE: Customer Appr.	
NEG-ALT Number: MP510513X6K1-0000	REVISION: 0	DWG SIZE: A	G.O.	ITEM	SHEET: 1 of 1

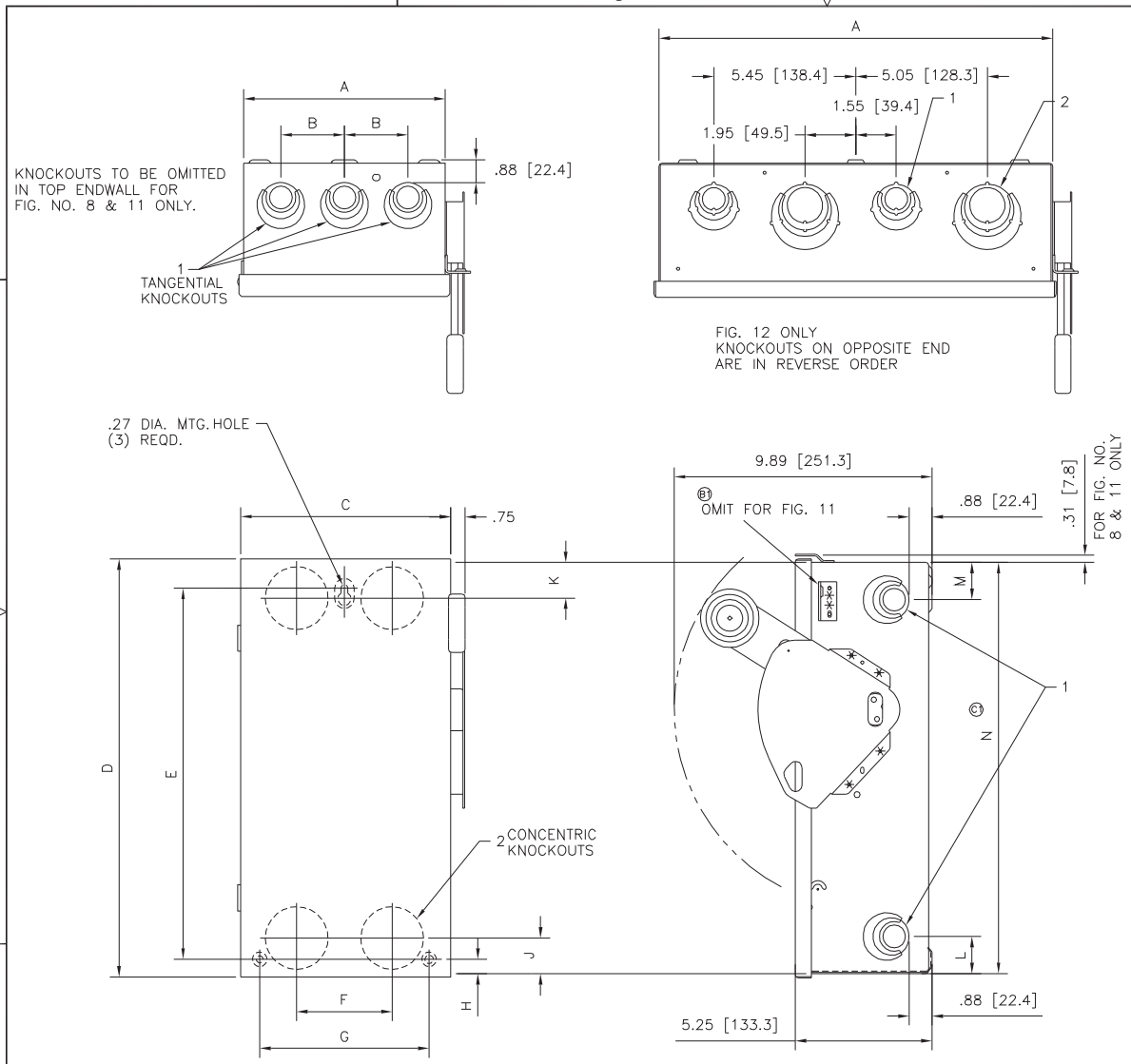

FIG. NO.	A	B	C	D	E	F	G	H	J	K	L	M	N	1	2	DESCRIPTION
12	15.12 [384.0]	—	15.43 [391.9]	21.99 [558.5]	20.00 [508]	—	12.75 [323.9]	.74 [18.8]	—	—	—	—	21.68 [550.7]	④ 3/4-1-1 1/4	④ 1/2-3/4-1-1 1/4	100 AMP 4 POLE TYPE 1
11	7.75 [196.9]	2.44 [62.0]	8.12 [206.2]	16.27 [413.3]	14.25 [362.0]	3.66 [93.0]	6.50 [165.1]	.56 [14.2]	1.38 [35.1]	—	1.44 [36.6]	—	15.81 [401.6]	⑤ 3/4-1-1 1/4	② 1/2-3/4-1-1 1/4	30 & 60 AMP 3 POLE TYPE 3R
10	7.75 [196.9]	2.44 [62.0]	8.06 [204.7]	16.00 [406.4]	14.25 [362.0]	3.66 [93.0]	6.50 [165.1]	.56 [14.2]	1.38 [35.1]	1.38 [35.1]	1.44 [36.6]	1.44 [36.6]	15.81 [401.6]	⑩ 3/4-1-1 1/4	④ 1/2-3/4-1-1 1/4	30 & 60 AMP 3 POLE TYPE 1
8	10.78 [273.8]	3.50 [88.9]	11.09 [281.7]	21.99 [558.5]	20.00 [508]	4.50 [114.3]	9.50 [241.3]	.74 [18.8]	1.88 [47.8]	—	1.88 [47.8]	—	21.68 [550.7]	⑤ 1 1/4-1 1/2-2	② 1 1/4-1 1/2-2	100 AMP 3 POLE TYPE 3R
7	10.78 [273.8]	3.50 [88.9]	11.09 [281.7]	21.99 [558.5]	20.00 [508]	4.50 [114.3]	9.50 [241.3]	.74 [18.8]	1.88 [47.8]	1.88 [47.8]	1.88 [47.8]	1.88 [47.8]	21.68 [550.7]	⑩ 1 1/4-1 1/2-2	④ 1 1/4-1 1/2-2	100 AMP 3 POLE TYPE 1
3	11.87 [310.5]	2.38 [60.5]	12.18 [309.4]	16.00 [406.4]	13.75 [349.3]	—	10.00 254	1.06 [26.9]	—	—	—	—	15.81 [401.6]	② 1/2-3/4-1	—	30 & 60 AMP 4 POLE TYPE 1

CONDUIT K.O. QTY. & SIZES

IT.	REVISION	1
	REDRAWN	A1
	CHG AT 5589MAN.	10/13/98
	ADDED "OMIT FOR FIG. 11"	B1
	WS BP DS2089	5/17/02
	CORRECTED "N" DIMENSION LOCATION	C1
	WS BP DS1516	6/12/08

THE INFORMATION ON THIS DRAWING IS THE PROPERTY OF EATON CORPORATION IT IS DISCLOSED IN CONFIDENCE AND IS NOT TO BE REPRODUCED, USED, OR DISCLOSED EXCEPT FOR THE PURPOSE FOR WHICH IT IS FURNISHED.

FILENAME: 95-955.DWG
FEDERAL ID NUMBER
PRODUCT CODE: BD90
REVISION: C1

DFTR. EDDIE CARSON DATE 10/5/82
APPD. J. BISCHOF DATE 10/5/82
APPD. DATE
DSPEC (PROJECT NO.) DV89-1069
SCALE 1=3
G.O.

CUTLER-HAMMER
CLEVELAND, TENNESSEE
EATON

TITLE DIMENSION SHEET 30, 60, &100 AMP TYPE 1 & 3 3P & 4P

TYPE

SIZE C
DWG. NO. 95-955
SHEET NO. 1 OF 1

DIMCFM
REV. 5/15/98

GO/NEG-Alt-Date: MP510513X6K1-0000-4/21/2017
Item Number:
Catalog Number: DH361NRK
Job Name: 2017 MENARDS STORE GEAR
Designation: Trash Compact

Safety Switch General Information

Global Specifications

System Voltage	600 VAC
Switch Type	Single Throw - Heavy Duty
Poles/Blades	3-Pole
Amperage	30
Protection	Fusible with No Neutral
Enclosure Type	NEMA 1
Special Paint	ANSI-61 (Gray) Standard
Fuse Clips	Standard
Switch Lugs	Standard
Fungus Proof Treatment	N
Lock-On Provision	N
Trapped Key Interlock	None
Fuse Pullers	N
Control Pole	N
Ground Lugs	N
Stainless Mechanism	N
Mill Duty	N

Nameplate

Safety Switch Catalog No.

DH361FGK

The information on this document is created by Eaton Corporation. It is disclosed in confidence and it is only to be used for the purpose in which it is supplied.

PREPARED BY: DAWSON AMY	DATE: 4/21/2017	**Eaton**			
APPROVED BY	DATE	JOB NAME: 2017 MENARDS STORE GEAR			
		DESIGNATION: Cardboard Com			
VERSION: 1.0.0.1		TYPE: Safety Switch General Information		DRAWING TYPE: Customer Appr.	
NEG-ALT Number: MP510513X6K1-0000	REVISION: 0	DWG SIZE: A	G.O.	ITEM	SHEET: 1 of 1

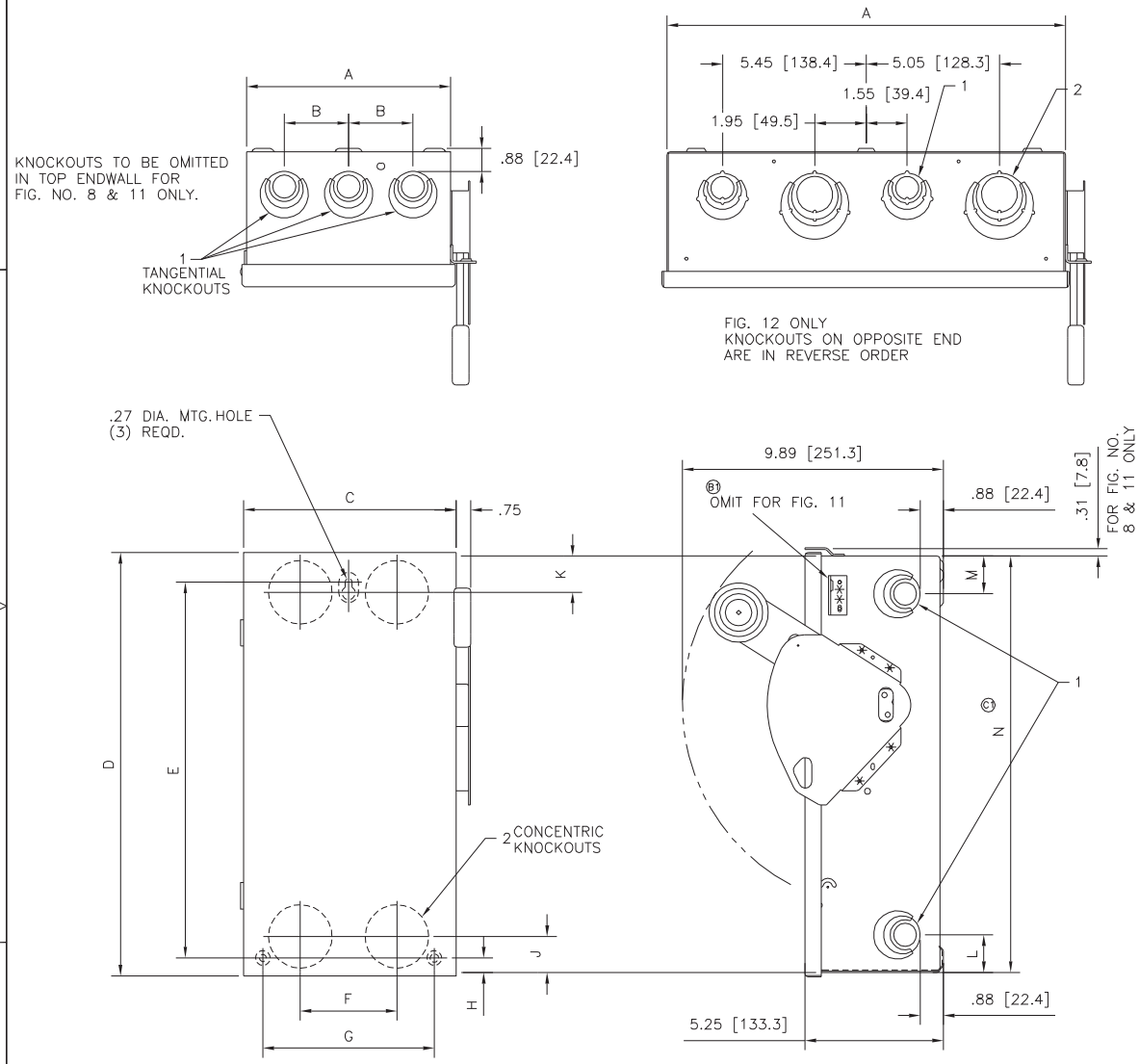

FIG. NO.	A	B	C	D	E	F	G	H	J	K	L	M	N	CONDUIT K.O. QTY. & SIZES 1	CONDUIT K.O. QTY. & SIZES 2	DESCRIPTION
12	15.12 [384.0]	—	15.43 [391.9]	21.99 [558.5]	20.00 [508]	—	12.75 [323.9]	.74 [18.8]	—	—	—	—	21.68 [550.7]	④ 3/4-1-1 1/4	④ 1/2-3/4-1-1 1/4	100 AMP 4 POLE TYPE 1
11	7.75 [196.9]	2.44 [62.0]	8.12 [206.2]	16.27 [413.3]	14.25 [362.0]	3.66 [93.0]	6.50 [165.1]	.56 [14.2]	1.38 [35.1]	—	1.44 [36.6]	—	15.81 [401.6]	⑤ 3/4-1-1 1/4	② 1/2-3/4-1-1 1/4	30 & 60 AMP 3 POLE TYPE 3R
10	7.75 [196.9]	2.44 [62.0]	8.06 [204.7]	16.00 [406.4]	14.25 [362.0]	3.66 [93.0]	6.50 [165.1]	.56 [14.2]	1.38 [35.1]	1.38 [35.1]	1.44 [36.6]	1.44 [36.6]	15.81 [401.6]	⑩ 3/4-1-1 1/4	④ 1/2-3/4-1-1 1/4	30 & 60 AMP 3 POLE TYPE 1
8	10.78 [273.8]	3.50 [88.9]	11.09 [281.7]	21.99 [558.5]	20.00 [508]	4.50 [114.3]	9.50 [241.3]	.74 [18.8]	1.88 [47.8]	—	1.88 [47.8]	—	21.68 [550.7]	⑤ 1 1/4-1 1/2-2	② 1 1/4-1 1/2-2	100 AMP 3 POLE TYPE 3R
7	10.78 [273.8]	3.50 [88.9]	11.09 [281.7]	21.99 [558.5]	20.00 [508]	4.50 [114.3]	9.50 [241.3]	.74 [18.8]	1.88 [47.8]	1.88 [47.8]	1.88 [47.8]	1.88 [47.8]	21.68 [550.7]	⑩ 1 1/4-1 1/2-2	④ 1 1/4-1 1/2-2	100 AMP 3 POLE TYPE 1
3	11.87 [310.5]	2.38 [60.5]	12.18 [309.4]	16.00 [406.4]	13.75 [349.3]	—	10.00 254	1.06 [26.9]	—	—	—	—	15.81 [401.6]	② 1/2-3/4-1	—	30 & 60 AMP 4 POLE TYPE 1

IT.	REVISION	1	
	REDRAWN	A1	10/13/98
	CH. UNIT SSB#MAIL		
	ADDED "OMIT FOR FIG. 11"	B1	5/17/02
	WS BP DS2088		
	CORRECTED "N" DIMENSION LOCATION	C1	6/12/08
	WS BP DS1316		

THE INFORMATION ON THIS DRAWING IS THE PROPERTY OF EATON CORPORATION IT IS DISCLOSED IN CONFIDENCE AND IS NOT TO BE REPRODUCED, USED, OR DISCLOSED EXCEPT FOR THE PURPOSE FOR WHICH IT IS FURNISHED.

FILENAME: 95-955.DWG
FEDERAL ID NUMBER
PRODUCT CODE: BD90
REVISION: C1

DFTR. EDDIE CARSON DATE 10/5/82
APPD. J. BISCHOF DATE 10/5/82
APPD. DATE
DSPEC (PROJECT NO.) DV89-1069
SCALE 1=3
G.O.

CUTLER-HAMMER
CLEVELAND, TENNESSEE
EATON

TITLE DIMENSION SHEET 30, 60, &100 AMP TYPE 1 & 3 3P & 4P

TYPE

SIZE C
DWG. NO. 95-955
SHEET NO. 1 OF 1

DIMCFM
REV. 5/15/98

GO/NEG-Alt-Date: MP510513X6K1-0000-4/21/2017
Item Number:
Catalog Number: DH361FGK
Job Name: 2017 MENARDS STORE GEAR
Designation: Cardboard Com

Safety Switch General Information

Global Specifications

System Voltage	600 VAC
Switch Type	Single Throw - Heavy Duty
Poles/Blades	3-Pole
Amperage	30
Protection	Non-Fusible with No Neutral
Enclosure Type	NEMA 1
Special Paint	ANSI-61 (Gray) Standard
Switch Lugs	Standard
Fungus Proof Treatment	N
Lock-On Provision	N
Trapped Key Interlock	None
Fuse Pullers	N
Control Pole	N
Ground Lugs	N
Stainless Mechanism	N
Mill Duty	N

Nameplate

Safety Switch Catalog No.

DH361UGK

The information on this document is created by Eaton Corporation. It is disclosed in confidence and it is only to be used for the purpose in which it is supplied.

PREPARED BY: DAWSON AMY	DATE: 4/21/2017	**Eaton**			
APPROVED BY	DATE	JOB NAME: 2017 MENARDS STORE GEAR			
		DESIGNATION: Batt Chargers			
VERSION: 1.0.0.1		TYPE: Safety Switch General Information		DRAWING TYPE: Customer Appr.	
NEG-ALT Number: MP510513X6K1-0000	REVISION: 0	DWG SIZE: A	G.O.	ITEM	SHEET: 1 of 1

GO/NEG-Alt-Date:	Job Name:
MP510513X6K1-0000-4/21/2017	2017 MENARDS STORE GEAR
Item Number: / **Catalog Number:**	**Designation:**
DH361UGK	Batt Chargers

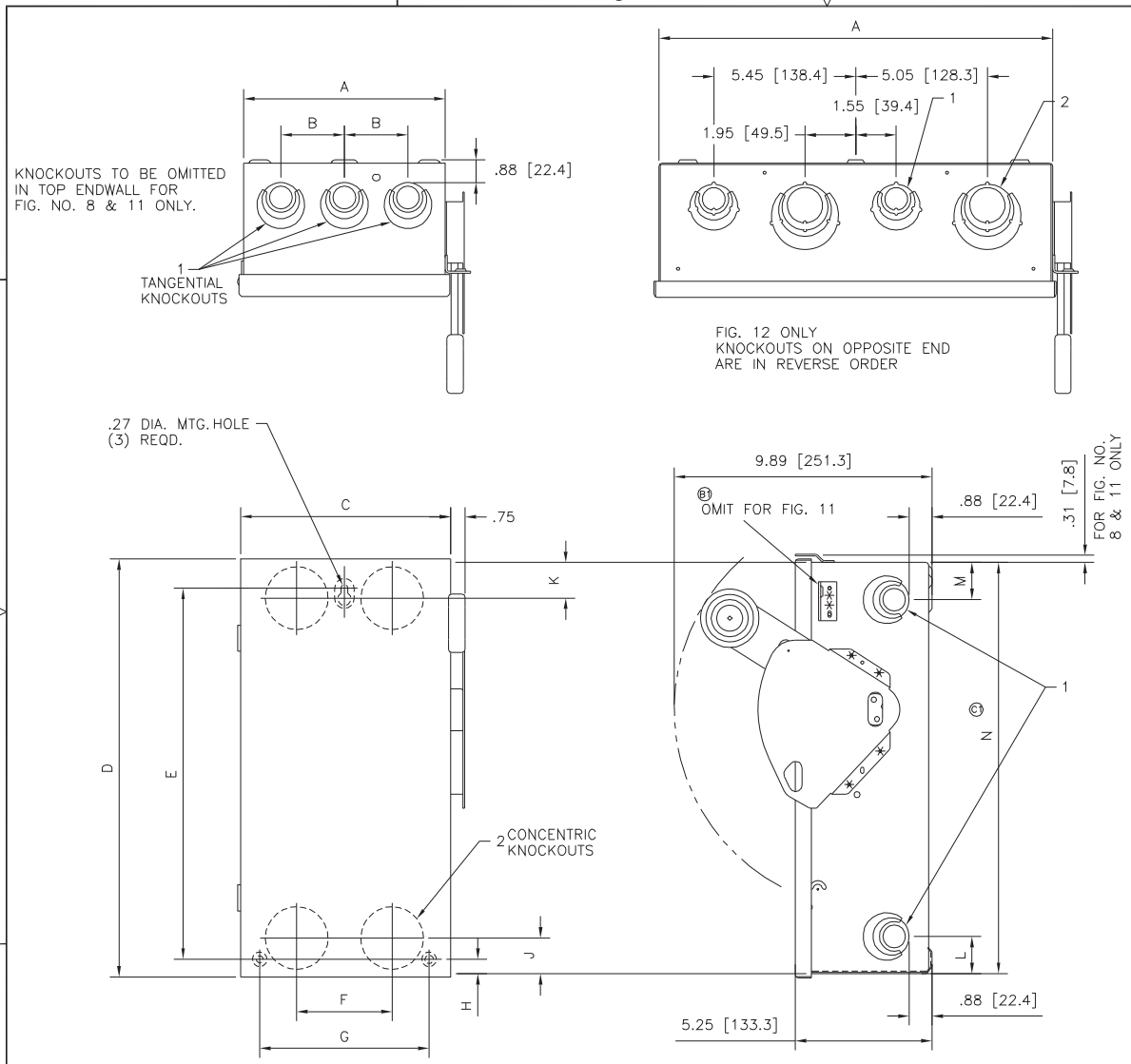

FIG. NO.	A	B	C	D	E	F	G	H	J	K	L	M	N	CONDUIT K.O. QTY. & SIZES 1	CONDUIT K.O. QTY. & SIZES 2	DESCRIPTION
12	15.12 [384.0]	—	15.43 [391.9]	21.99 [558.5]	20.00 [508]	—	12.75 [323.9]	.74 [18.8]	—	—	—	—	21.68 [550.7]	④ 3/4-1-1 1/4	④ 1/2-3/4-1-1 1/4	100 AMP 4 POLE TYPE 1
11	7.75 [196.9]	2.44 [62.0]	8.12 [206.2]	16.27 [413.3]	14.25 [362.0]	3.66 [93.0]	6.50 [165.1]	.56 [14.2]	1.38 [35.1]	—	1.44 [36.6]	—	15.81 [401.6]	⑤ 3/4-1-1 1/4	② 1/2-3/4-1-1 1/4	30 & 60 AMP 3 POLE TYPE 3R
10	7.75 [196.9]	2.44 [62.0]	8.06 [204.7]	16.00 [406.4]	14.25 [362.0]	3.66 [93.0]	6.50 [165.1]	.56 [14.2]	1.38 [35.1]	1.38 [35.1]	1.44 [36.6]	1.44 [36.6]	15.81 [401.6]	⑩ 3/4-1-1 1/4	④ 1/2-3/4-1-1 1/4	30 & 60 AMP 3 POLE TYPE 1
8	10.78 [273.8]	3.50 [88.9]	11.09 [281.7]	21.99 [558.5]	20.00 [508]	4.50 [114.3]	9.50 [241.3]	.74 [18.8]	1.88 [47.8]	—	1.88 [47.8]	—	21.68 [550.7]	⑤ 1 1/4-1 1/2-2	② 1 1/4-1 1/2-2	100 AMP 3 POLE TYPE 3R
7	10.78 [273.8]	3.50 [88.9]	11.09 [281.7]	21.99 [558.5]	20.00 [508]	4.50 [114.3]	9.50 [241.3]	.74 [18.8]	1.88 [47.8]	1.88 [47.8]	1.88 [47.8]	1.88 [47.8]	21.68 [550.7]	⑩ 1 1/4-1 1/2-2	④ 1 1/4-1 1/2-2	100 AMP 3 POLE TYPE 1
3	11.87 [310.5]	2.38 [60.5]	12.18 [309.4]	16.00 [406.4]	13.75 [349.3]	—	10.00 254	1.06 [26.9]	—	—	—	—	15.81 [401.6]	② 1/2-3/4-1	—	30 & 60 AMP 4 POLE TYPE 1

IT.	REVISION 1	REDRAWN	REVISED "CAUT" FOR FIG. 11	REDRAWN	CORRECTED "N" DIMENSION LOCATION	
		A1	B1	C1	D1	
		10/12/98	10/12/98	4/17/02	6/12/08	

THE INFORMATION ON THIS DRAWING IS THE PROPERTY OF EATON CORPORATION IT IS DISCLOSED IN CONFIDENCE AND IS NOT TO BE REPRODUCED, USED, OR DISCLOSED EXCEPT FOR THE PURPOSE FOR WHICH IT IS FURNISHED.

FILENAME 95-955.DWG
FEDERAL ID NUMBER

PRODUCT CODE BD90 | REVISION C1

DFTR. EDDIE CARSON DATE 10/5/82
APPD. J. BISCHOF DATE 10/5/82
APPD. DATE
DSPEC (PROJECT NO.) DV89-1069 | SCALE 1=3
G.O.

CUTLER-HAMMER
CLEVELAND, TENNESSEE
EATON

TITLE DIMENSION SHEET 30, 60, &100 AMP TYPE 1 & 3 3P & 4P

TYPE

SIZE C | DWG. NO. 95-955 | SHEET NO. 1 OF 1

DIMCFM REV. 5/15/98

Safety Switch General Information

Global Specifications

System Voltage	240 VAC
Switch Type	Single Throw - General Duty
Poles/Blades	3-Pole
Amperage	30
Protection	Fusible with Neutral
Enclosure Type	NEMA 1
Fuse Clips	Standard
Switch Lugs	Standard
Fungus Proof Treatment	N
Lock-On Provision	N
Fuse Pullers	N
Control Pole	N
Ground Lugs	N
Stainless Mechanism	N
Mill Duty	N

Nameplate

Safety Switch Catalog No.

DG321NGB

The information on this document is created by Eaton Corporation. It is disclosed in confidence and it is only to be used for the purpose in which it is supplied.

PREPARED BY: DAWSON AMY	DATE: 4/21/2017	**Eaton**			
APPROVED BY	DATE	JOB NAME: 2017 MENARDS STORE GEAR			
		DESIGNATION: Carpet/Vinyl Machines			
VERSION: 1.0.0.1		TYPE: Safety Switch General Information		DRAWING TYPE: Customer Appr.	
NEG-ALT Number: MP510513X6K1-0000	REVISION: 0	DWG SIZE: A	G.O.	ITEM	SHEET: 1 of 1

Date: PDF Generated:9/28/2012 Page: 1 of 1

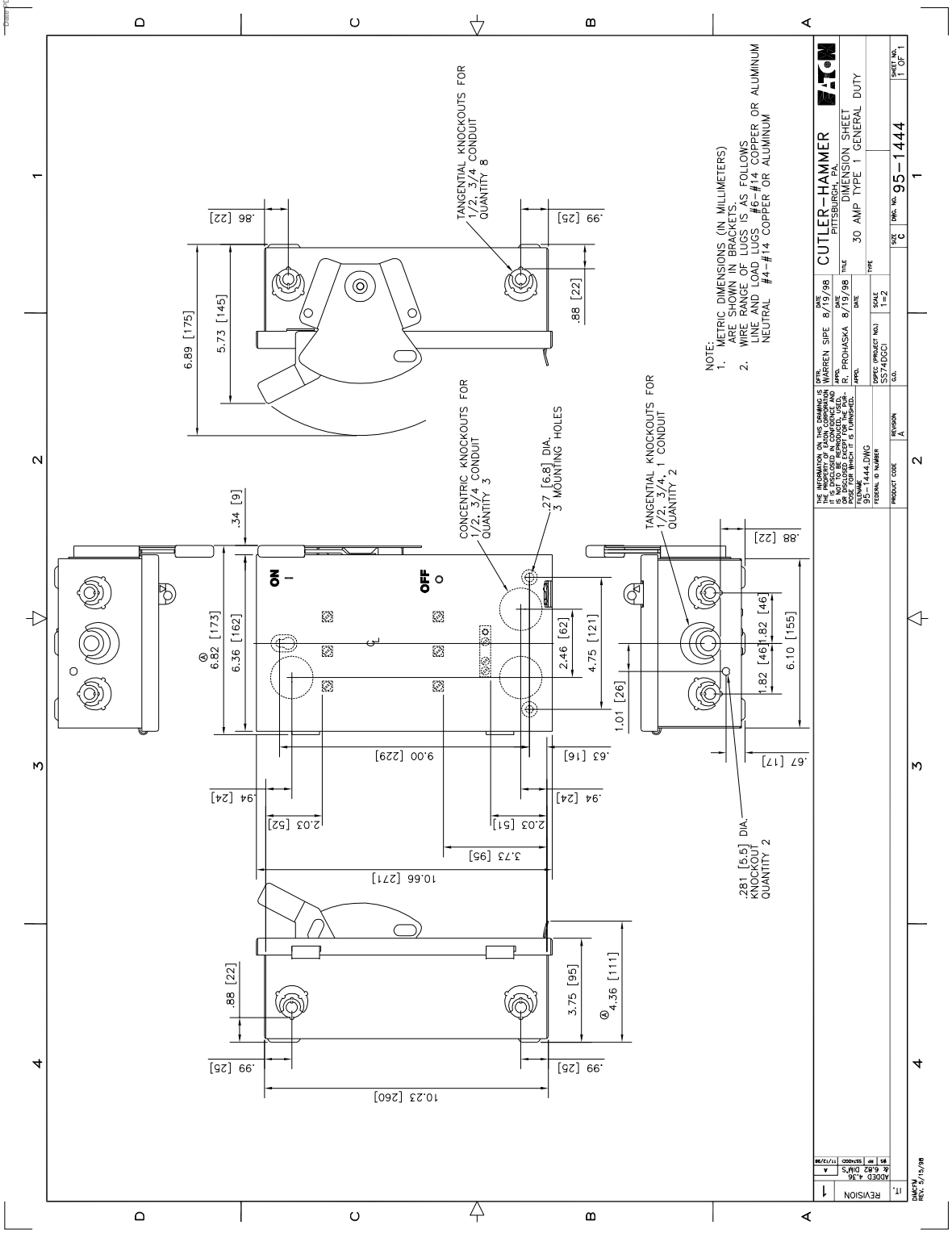

GO/NEG-Alt-Date:		Job Name:
MP510513X6K1-0000-4/21/2017		2017 MENARDS STORE GEAR
Item Number:	**Catalog Number:**	**Designation:**
	DG321NGB	Carpet/Vinyl Machines

Safety Switch General Information

Global Specifications

System Voltage	600 VAC
Switch Type	Single Throw - Heavy Duty
Poles/Blades	3-Pole
Amperage	30
Protection	Fusible with Neutral
Enclosure Type	NEMA 3R
Special Paint	ANSI-61 (Gray) Standard
Fuse Clips	Standard
Switch Lugs	Standard
Fungus Proof Treatment	N
Lock-On Provision	N
Trapped Key Interlock	None
Fuse Pullers	N
Control Pole	N
Ground Lugs	N
Stainless Mechanism	N
Mill Duty	N

Nameplate

Safety Switch Catalog No.

DH361NRK

The information on this document is created by Eaton Corporation. It is disclosed in confidence and it is only to be used for the purpose in which it is supplied.

PREPARED BY: DAWSON AMY	DATE: 4/21/2017	**Eaton**			
APPROVED BY	DATE	JOB NAME: 2017 MENARDS STORE GEAR			
		DESIGNATION: Bi-Fold Doors			
VERSION: 1.0.0.1		TYPE: Safety Switch General Information		DRAWING TYPE: Customer Appr.	
NEG-ALT Number: MP510513X6K1-0000	REVISION: 0	DWG SIZE: A	G.O.	ITEM	SHEET: 1 of 1

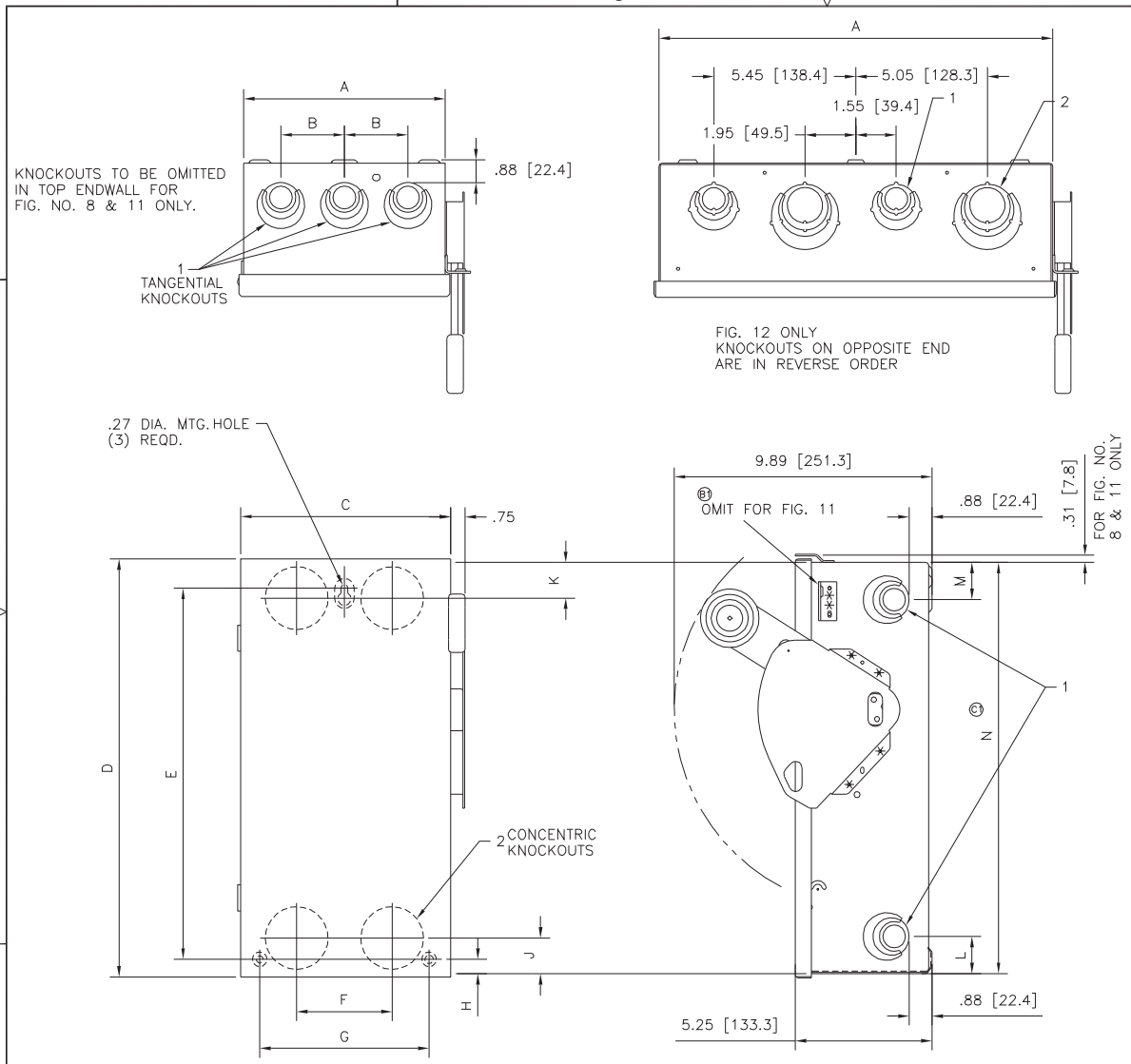

FIG. NO.	A	B	C	D	E	F	G	H	J	K	L	M	N	1 CONDUIT K.O. QTY. & SIZES	2 CONDUIT K.O. QTY. & SIZES	DESCRIPTION
12	15.12 [384.0]	—	15.43 [391.9]	21.99 [558.5]	20.00 [508]	—	12.75 [323.9]	.74 [18.8]	—	—	—	—	21.68 [550.7]	④ 3/4-1-1 1/4	④ 1/2-3/4-1-1 1/4	100 AMP 4 POLE TYPE 1
11	7.75 [196.9]	2.44 [62.0]	8.12 [206.2]	16.27 [413.3]	14.25 [362.0]	3.66 [93.0]	6.50 [165.1]	.56 [14.2]	1.38 [35.1]	—	1.44 [36.6]	—	15.81 [401.6]	⑤ 3/4-1-1 1/4	② 1/2-3/4-1-1 1/4	30 & 60 AMP 3 POLE TYPE 3R
10	7.75 [196.9]	2.44 [62.0]	8.06 [204.7]	16.00 [406.4]	14.25 [362.0]	3.66 [93.0]	6.50 [165.1]	.56 [14.2]	1.38 [35.1]	1.38 [35.1]	1.44 [36.6]	1.44 [36.6]	15.81 [401.6]	⑩ 3/4-1-1 1/4	④ 1/2-3/4-1-1 1/4	30 & 60 AMP 3 POLE TYPE 1
8	10.78 [273.8]	3.50 [88.9]	11.09 [281.7]	21.99 [558.5]	20.00 [508]	4.50 [114.3]	9.50 [241.3]	.74 [18.8]	1.88 [47.8]	—	1.88 [47.8]	—	21.68 [550.7]	⑤ 1 1/4-1 1/2-2	② 1 1/4-1 1/2-2	100 AMP 3 POLE TYPE 3R
7	10.78 [273.8]	3.50 [88.9]	11.09 [281.7]	21.99 [558.5]	20.00 [508]	4.50 [114.3]	9.50 [241.3]	.74 [18.8]	1.88 [47.8]	1.88 [47.8]	1.88 [47.8]	1.88 [47.8]	21.68 [550.7]	⑩ 1 1/4-1 1/2-2	④ 1 1/4-1 1/2-2	100 AMP 3 POLE TYPE 1
3	11.87 [310.5]	2.38 [60.5]	12.18 [309.4]	16.00 [406.4]	13.75 [349.3]	—	10.00 254	1.06 [26.9]	—	—	—	—	15.81 [401.6]	② 1/2-3/4-1	—	30 & 60 AMP 4 POLE TYPE 1

IT.	REVISION	1	
	REDRAWN	A1	10/13/98
	CH. UNIT SSB#MAIL		
	ADDED "OMIT FOR FIG. 11"	B1	5/17/02
	WS BP DS2088		
	CORRECTED "N" DIMENSION LOCATION	C1	6/12/08
	WS BP DS1516		

THE INFORMATION ON THIS DRAWING IS THE PROPERTY OF EATON CORPORATION IT IS DISCLOSED IN CONFIDENCE AND IS NOT TO BE REPRODUCED, USED, OR DISCLOSED EXCEPT FOR THE PURPOSE FOR WHICH IT IS FURNISHED.

FILENAME: 95-955.DWG
FEDERAL ID NUMBER
PRODUCT CODE: BD90 | REVISION: C1

DFTR. EDDIE CARSON DATE 10/5/82
APPD. J. BISCHOF DATE 10/5/82
APPD. DATE
DSPEC (PROJECT NO.) DV89-1069 | SCALE 1=3
G.O.

CUTLER-HAMMER
CLEVELAND, TENNESSEE
EATON
TITLE DIMENSION SHEET 30, 60, &100 AMP TYPE 1 & 3 3P & 4P
TYPE
SIZE C | DWG. NO. 95-955 | SHEET NO. 1 OF 1

DIMCFM
REV. 5/15/98

GO/NEG-Alt-Date: MP510513X6K1-0000-4/21/2017
Item Number:
Catalog Number: DH361NRK
Job Name: 2017 MENARDS STORE GEAR
Designation: Bi-Fold Doors

Safety Switch General Information

Global Specifications

System Voltage	240 VAC
Switch Type	Single Throw - General Duty
Poles/Blades	2-Pole
Amperage	30
Protection	Non-Fusible with No Neutral
Enclosure Type	NEMA 1
Switch Lugs	Standard
Fungus Proof Treatment	N
Lock-On Provision	N
Fuse Pullers	N
Control Pole	N
Ground Lugs	N
Stainless Mechanism	N
Mill Duty	N

Nameplate

Safety Switch Catalog No.

DG221UGB

The information on this document is created by Eaton Corporation. It is disclosed in confidence and it is only to be used for the purpose in which it is supplied.

PREPARED BY: DAWSON AMY	DATE: 4/21/2017		**Eaton**		
APPROVED BY	DATE		JOB NAME: 2017 MENARDS STORE GEAR DESIGNATION: Water Heater		
VERSION: 1.0.0.1			TYPE: Safety Switch General Information	DRAWING TYPE: Customer Appr.	
NEG-ALT Number: MP510513X6K1-0000	REVISION: 0	DWG SIZE: A	G.O.	ITEM	SHEET: 1 of 1

Date: PDF Generated:9/28/2012 Page: 1 of 1

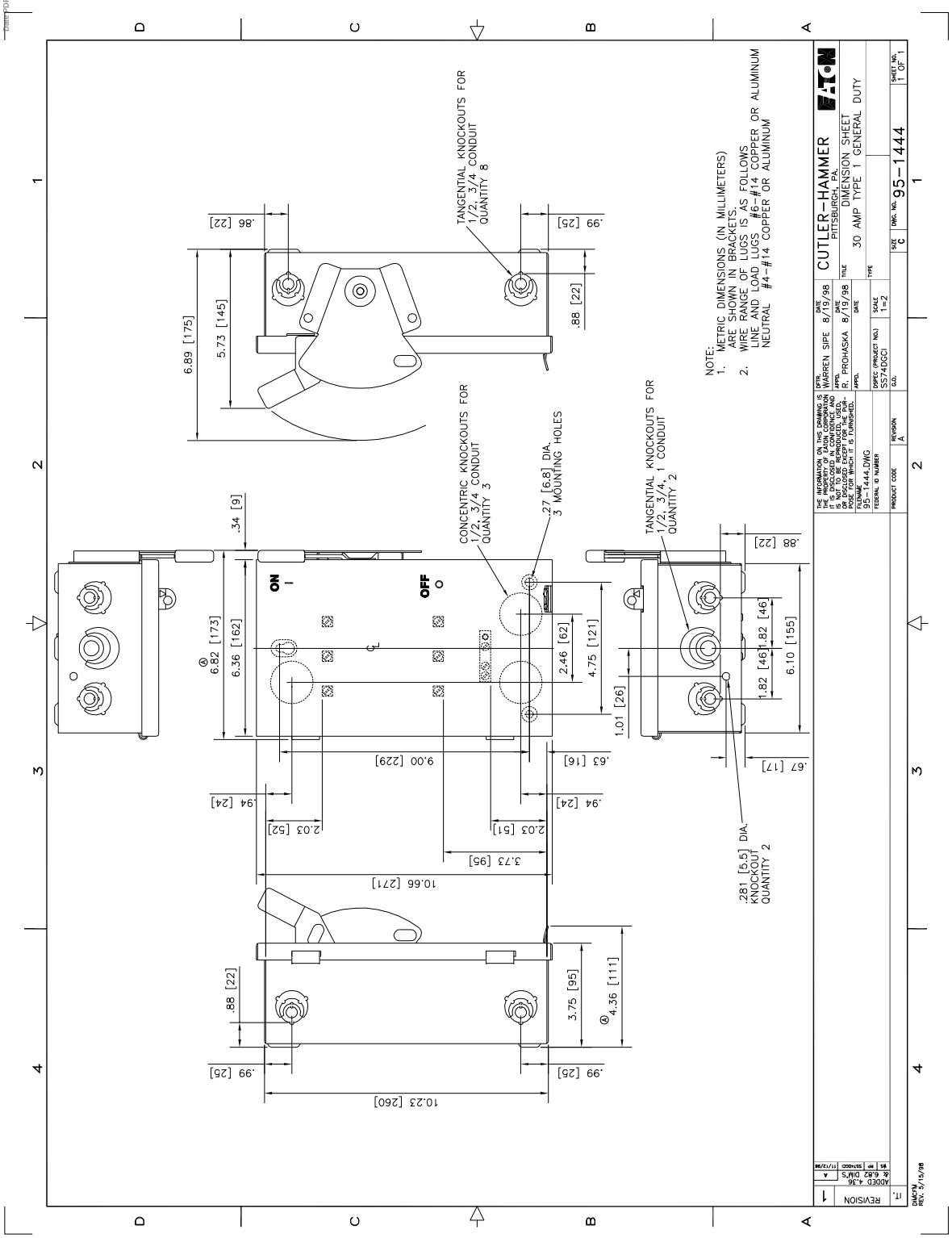

GO/NEG-Alt-Date:		Job Name:
MP510513X6K1-0000-4/21/2017		2017 MENARDS STORE GEAR
Item Number:	**Catalog Number:**	**Designation:**
	DG221UGB	Water Heater

Safety Switch General Information

Global Specifications

System Voltage	600 VAC
Switch Type	Single Throw - Heavy Duty
Poles/Blades	2-Pole
Amperage	30
Protection	Fusible with Neutral
Enclosure Type	NEMA 1
Special Paint	ANSI-61 (Gray) Standard
Fuse Clips	Standard
Switch Lugs	Standard
Fungus Proof Treatment	N
Lock-On Provision	N
Trapped Key Interlock	None
Fuse Pullers	N
Control Pole	N
Ground Lugs	N
Stainless Mechanism	N
Mill Duty	N

Nameplate

Safety Switch Catalog No.

DH261NGK

The information on this document is created by Eaton Corporation. It is disclosed in confidence and it is only to be used for the purpose in which it is supplied.

PREPARED BY: DAWSON AMY	DATE: 4/21/2017	**Eaton**			
APPROVED BY	DATE	JOB NAME: 2017 MENARDS STORE GEAR			
		DESIGNATION: Warehouse E lights			
VERSION: 1.0.0.1		TYPE: Safety Switch General Information		DRAWING TYPE: Customer Appr.	
NEG-ALT Number: MP510513X6K1-0000	REVISION: 0	DWG SIZE: A	G.O.	ITEM	SHEET: 1 of 1

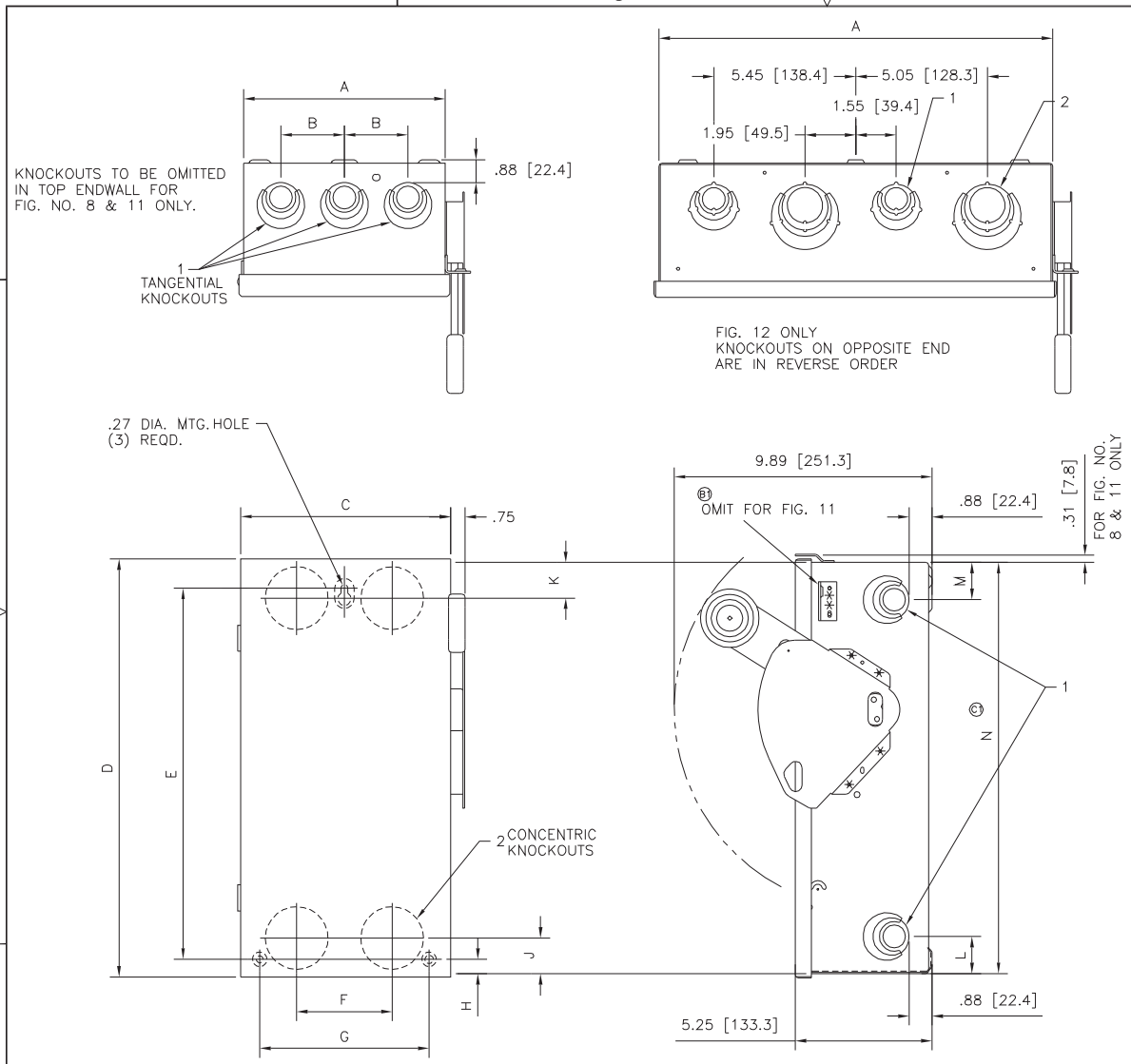

FIG. NO.	A	B	C	D	E	F	G	H	J	K	L	M	N	CONDUIT K.O. QTY. & SIZES 1	2	DESCRIPTION
12	15.12 [384.0]	—	15.43 [391.9]	21.99 [558.5]	20.00 [508]	—	12.75 [323.9]	.74 [18.8]	—	—	—	—	21.68 [550.7]	④ 3/4-1-1 1/4	④ 1/2-3/4-1-1 1/4	100 AMP 4 POLE TYPE 1
11	7.75 [196.9]	2.44 [62.0]	8.12 [206.2]	16.27 [413.3]	14.25 [362.0]	3.66 [93.0]	6.50 [165.1]	.56 [14.2]	1.38 [35.1]	—	1.44 [36.6]	—	15.81 [401.6]	⑤ 3/4-1-1 1/4	② 1/2-3/4-1-1 1/4	30 & 60 AMP 3 POLE TYPE 3R
10	7.75 [196.9]	2.44 [62.0]	8.06 [204.7]	16.00 [406.4]	14.25 [362.0]	3.66 [93.0]	6.50 [165.1]	.56 [14.2]	1.38 [35.1]	1.38 [35.1]	1.44 [36.6]	1.44 [36.6]	15.81 [401.6]	⑩ 3/4-1-1 1/4	④ 1/2-3/4-1-1 1/4	30 & 60 AMP 3 POLE TYPE 1
8	10.78 [273.8]	3.50 [88.9]	11.09 [281.7]	21.99 [558.5]	20.00 [508]	4.50 [114.3]	9.50 [241.3]	.74 [18.8]	1.88 [47.8]	—	1.88 [47.8]	—	21.68 [550.7]	⑤ 1 1/4-1 1/2-2	② 1 1/4-1 1/2-2	100 AMP 3 POLE TYPE 3R
7	10.78 [273.8]	3.50 [88.9]	11.09 [281.7]	21.99 [558.5]	20.00 [508]	4.50 [114.3]	9.50 [241.3]	.74 [18.8]	1.88 [47.8]	1.88 [47.8]	1.88 [47.8]	1.88 [47.8]	21.68 [550.7]	⑩ 1 1/4-1 1/2-2	④ 1 1/4-1 1/2-2	100 AMP 3 POLE TYPE 1
3	11.87 [310.5]	2.38 [60.5]	12.18 [309.4]	16.00 [406.4]	13.75 [349.3]	—	10.00 254	1.06 [26.9]	—	—	—	—	15.81 [401.6]	② 1/2-3/4-1	—	30 & 60 AMP 4 POLE TYPE 1

IT.	REVISION	1	
	REDRAWN	A1	10/13/98
	CH. UAT 5589MAN.		
	ADDED "OMIT FOR FIG. 11"	B1	5/17/02
	WS BP DS2089		
	CORRECTED "N" DIMENSION LOCATION	C1	6/12/08
	WS BP DS1516		

THE INFORMATION ON THIS DRAWING IS THE PROPERTY OF EATON CORPORATION IT IS DISCLOSED IN CONFIDENCE AND IS NOT TO BE REPRODUCED, USED, OR DISCLOSED EXCEPT FOR THE PURPOSE FOR WHICH IT IS FURNISHED.

FILENAME: 95-955.DWG
FEDERAL ID NUMBER
PRODUCT CODE: BD90 | REVISION: C1

DFTR. EDDIE CARSON DATE 10/5/82
APPD. J. BISCHOF DATE 10/5/82
APPD. DATE
DSPEC (PROJECT NO.) DV89-1069 | SCALE 1=3
G.O.

CUTLER-HAMMER
CLEVELAND, TENNESSEE
EATON
TITLE DIMENSION SHEET 30, 60, &100 AMP TYPE 1 & 3 3P & 4P
TYPE
SIZE C | DWG. NO. 95-955 | SHEET NO. 1 OF 1

DIMCFM
REV. 5/15/98

GO/NEG-Alt-Date: MP510513X6K1-0000-4/21/2017
Item Number:
Catalog Number: DH261NGK
Job Name: 2017 MENARDS STORE GEAR
Designation: Warehouse E lights

Safety Switch General Information

Global Specifications

System Voltage	600 VAC
Switch Type	Single Throw - Heavy Duty
Poles/Blades	3-Pole
Amperage	100
Protection	Fusible with No Neutral
Enclosure Type	NEMA 1
Special Paint	ANSI-61 (Gray) Standard
Fuse Clips	Standard
Switch Lugs	Standard
Fungus Proof Treatment	N
Lock-On Provision	N
Trapped Key Interlock	None
Fuse Pullers	N
Control Pole	N
Ground Lugs	N
Stainless Mechanism	N
Mill Duty	N

Nameplate

Safety Switch Catalog No.

DH363FGK

The information on this document is created by Eaton Corporation. It is disclosed in confidence and it is only to be used for the purpose in which it is supplied.

PREPARED BY: DAWSON AMY	DATE: 4/21/2017	**Eaton**			
APPROVED BY	DATE	JOB NAME: 2017 MENARDS STORE GEAR			
		DESIGNATION: Elv. Mech Room			
VERSION: 1.0.0.1		TYPE: Safety Switch General Information		DRAWING TYPE: Customer Appr.	
NEG-ALT Number: MP510513X6K1-0000	REVISION: 0	DWG SIZE: A	G.O.	ITEM	SHEET: 1 of 1

GO/NEG-Alt-Date:	Job Name:
MP510513X6K1-0000-4/21/2017	2017 MENARDS STORE GEAR
Item Number: / **Catalog Number:**	**Designation:**
DH363FGK	Elv. Mech Room

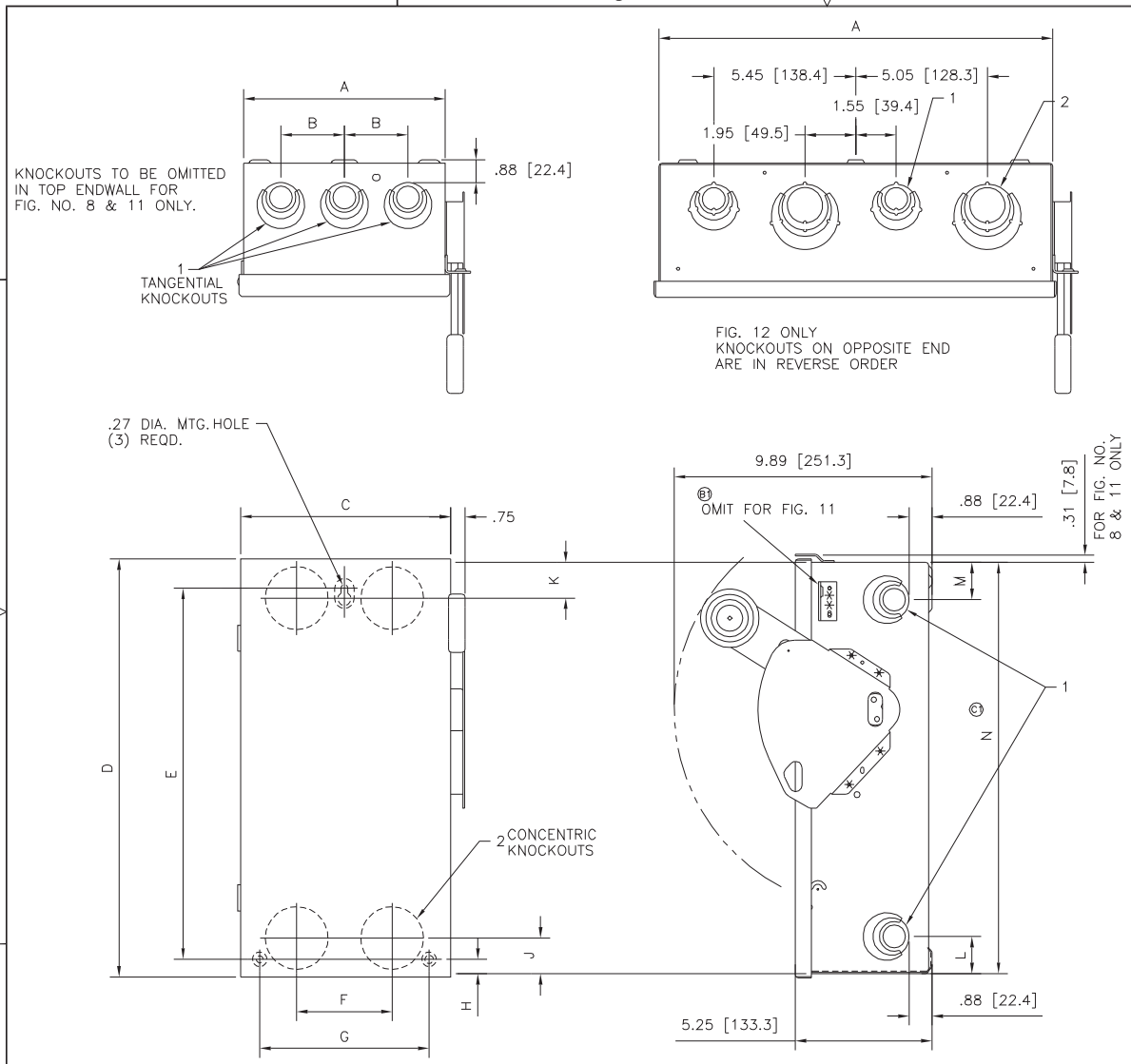

FIG. NO.	A	B	C	D	E	F	G	H	J	K	L	M	N	CONDUIT K.O. QTY. & SIZES 1	CONDUIT K.O. QTY. & SIZES 2	DESCRIPTION
12	15.12 [384.0]	—	15.43 [391.9]	21.99 [558.5]	20.00 [508]	—	12.75 [323.9]	.74 [18.8]	—	—	—	—	21.68 [550.7]	④ 3/4-1-1 1/4	④ 1/2-3/4-1-1 1/4	100 AMP 4 POLE TYPE 1
11	7.75 [196.9]	2.44 [62.0]	8.12 [206.2]	16.27 [413.3]	14.25 [362.0]	3.66 [93.0]	6.50 [165.1]	.56 [14.2]	1.38 [35.1]	—	1.44 [36.6]	—	15.81 [401.6]	⑤ 3/4-1-1 1/4	② 1/2-3/4-1-1 1/4	30 & 60 AMP 3 POLE TYPE 3R
10	7.75 [196.9]	2.44 [62.0]	8.06 [204.7]	16.00 [406.4]	14.25 [362.0]	3.66 [93.0]	6.50 [165.1]	.56 [14.2]	1.38 [35.1]	1.38 [35.1]	1.44 [36.6]	1.44 [36.6]	15.81 [401.6]	⑩ 3/4-1-1 1/4	④ 1/2-3/4-1-1 1/4	30 & 60 AMP 3 POLE TYPE 1
8	10.78 [273.8]	3.50 [88.9]	11.09 [281.7]	21.99 [558.5]	20.00 [508]	4.50 [114.3]	9.50 [241.3]	.74 [18.8]	1.88 [47.8]	—	1.88 [47.8]	—	21.68 [550.7]	⑤ 1 1/4-1 1/2-2	② 1 1/4-1 1/2-2	100 AMP 3 POLE TYPE 3R
7	10.78 [273.8]	3.50 [88.9]	11.09 [281.7]	21.99 [558.5]	20.00 [508]	4.50 [114.3]	9.50 [241.3]	.74 [18.8]	1.88 [47.8]	1.88 [47.8]	1.88 [47.8]	1.88 [47.8]	21.68 [550.7]	⑩ 1 1/4-1 1/2-2	④ 1 1/4-1 1/2-2	100 AMP 3 POLE TYPE 1
3	11.87 [310.5]	2.38 [60.5]	12.18 [309.4]	16.00 [406.4]	13.75 [349.3]	—	10.00 254	1.06 [26.9]	—	—	—	—	15.81 [401.6]	② 1/2-3/4-1	—	30 & 60 AMP 4 POLE TYPE 1

IT.	REVISION 1	REDRAWN	REVISED "CAUT" FOR FIG. 11	CORRECTED "N" DIMENSION LOCATION
	A1	B1	C1	
	10/12/98	10/12/98	4/17/02	6/12/08

THE INFORMATION ON THIS DRAWING IS THE PROPERTY OF EATON CORPORATION IT IS DISCLOSED IN CONFIDENCE AND IS NOT TO BE REPRODUCED, USED, OR DISCLOSED EXCEPT FOR THE PURPOSE FOR WHICH IT IS FURNISHED.

FILENAME 95-955.DWG

FEDERAL ID NUMBER

PRODUCT CODE BD90 | REVISION C1

DFTR. EDDIE CARSON DATE 10/5/82

APPD. J. BISCHOF DATE 10/5/82

APPD. DATE

DSPEC (PROJECT NO.) DV89-1069 | SCALE 1=3

G.O.

CUTLER-HAMMER
CLEVELAND, TENNESSEE
EATON

TITLE DIMENSION SHEET 30, 60, &100 AMP TYPE 1 & 3 3P & 4P

TYPE

SIZE C | DWG. NO. 95-955 | SHEET NO. 1 OF 1

DIMCFM REV. 5/15/98

Safety Switch General Information

Global Specifications

System Voltage	240 VAC
Switch Type	Single Throw - Heavy Duty
Poles/Blades	3-Pole
Amperage	30
Protection	Fusible with No Neutral
Enclosure Type	NEMA 1
Special Paint	ANSI-61 (Gray) Standard
Fuse Clips	Standard
Switch Lugs	Standard
Fungus Proof Treatment	N
Lock-On Provision	N
Trapped Key Interlock	None
Fuse Pullers	N
Control Pole	N
Ground Lugs	N
Stainless Mechanism	N
Mill Duty	N

Nameplate

Safety Switch Catalog No.

DH321FGK

The information on this document is created by Eaton Corporation. It is disclosed in confidence and it is only to be used for the purpose in which it is supplied.

PREPARED BY: DAWSON AMY	DATE: 4/21/2017	**Eaton**			
APPROVED BY	DATE	JOB NAME: 2017 MENARDS STORE GEAR			
		DESIGNATION: Cab Lights and Fan			
VERSION: 1.0.0.1		TYPE: Safety Switch General Information		DRAWING TYPE: Customer Appr.	
NEG-ALT Number: MP510513X6K1-0000	REVISION: 0	DWG SIZE: A	G.O.	ITEM	SHEET: 1 of 1

GO/NEG-Alt-Date:	Job Name:
MP510513X6K1-0000-4/21/2017	2017 MENARDS STORE GEAR
Item Number: / **Catalog Number:**	**Designation:**
DH321FGK	Cab Lights and Fan

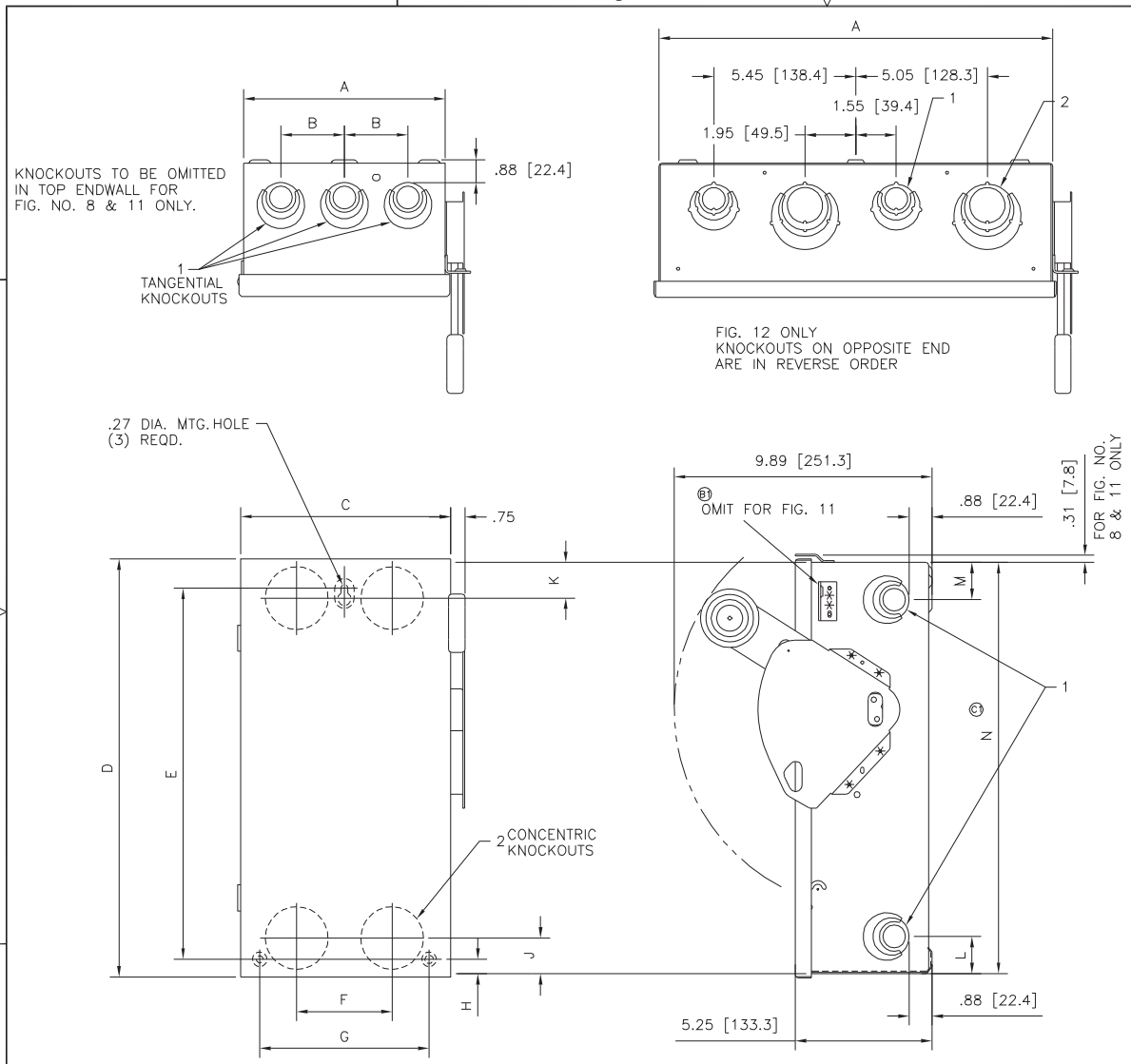

FIG. NO.	A	B	C	D	E	F	G	H	J	K	L	M	N	CONDUIT K.O. QTY. & SIZES 1	CONDUIT K.O. QTY. & SIZES 2	DESCRIPTION
12	15.12 [384.0]	—	15.43 [391.9]	21.99 [558.5]	20.00 [508]	—	12.75 [323.9]	.74 [18.8]	—	—	—	—	21.68 [550.7]	④ 3/4-1-1 1/4	④ 1/2-3/4-1-1 1/4	100 AMP 4 POLE TYPE 1
11	7.75 [196.9]	2.44 [62.0]	8.12 [206.2]	16.27 [413.3]	14.25 [362.0]	3.66 [93.0]	6.50 [165.1]	.56 [14.2]	1.38 [35.1]	—	1.44 [36.6]	—	15.81 [401.6]	⑤ 3/4-1-1 1/4	② 1/2-3/4-1-1 1/4	30 & 60 AMP 3 POLE TYPE 3R
10	7.75 [196.9]	2.44 [62.0]	8.06 [204.7]	16.00 [406.4]	14.25 [362.0]	3.66 [93.0]	6.50 [165.1]	.56 [14.2]	1.38 [35.1]	1.38 [35.1]	1.44 [36.6]	1.44 [36.6]	15.81 [401.6]	⑩ 3/4-1-1 1/4	④ 1/2-3/4-1-1 1/4	30 & 60 AMP 3 POLE TYPE 1
8	10.78 [273.8]	3.50 [88.9]	11.09 [281.7]	21.99 [558.5]	20.00 [508]	4.50 [114.3]	9.50 [241.3]	.74 [18.8]	1.88 [47.8]	—	1.88 [47.8]	—	21.68 [550.7]	⑤ 1 1/4-1 1/2-2	② 1 1/4-1 1/2-2	100 AMP 3 POLE TYPE 3R
7	10.78 [273.8]	3.50 [88.9]	11.09 [281.7]	21.99 [558.5]	20.00 [508]	4.50 [114.3]	9.50 [241.3]	.74 [18.8]	1.88 [47.8]	1.88 [47.8]	1.88 [47.8]	1.88 [47.8]	21.68 [550.7]	⑩ 1 1/4-1 1/2-2	④ 1 1/4-1 1/2-2	100 AMP 3 POLE TYPE 1
3	11.87 [310.5]	2.38 [60.5]	12.18 [309.4]	16.00 [406.4]	13.75 [349.3]	—	10.00 254	1.06 [26.9]	—	—	—	—	15.81 [401.6]	② 1/2-3/4-1	—	30 & 60 AMP 4 POLE TYPE 1

IT.	REVISION 1	REDRAWN	REVISED "CAUT. FOR FIG. 11"	CORRECTED "N" DIMENSION LOCATION
	A1	B1	C1	
	10/12/98	11/7/02	6/12/08	
	REDRAWN	REDRAWN	REDRAWN	
	JW	JW	JW/JS	

THE INFORMATION ON THIS DRAWING IS THE PROPERTY OF EATON CORPORATION IT IS DISCLOSED IN CONFIDENCE AND IS NOT TO BE REPRODUCED, USED, OR DISCLOSED EXCEPT FOR THE PURPOSE FOR WHICH IT IS FURNISHED.

FILENAME: 95-955.DWG
FEDERAL ID NUMBER:

PRODUCT CODE: BD90
REVISION: C1

DFTR. EDDIE CARSON DATE 10/5/82
APPD. J. BISCHOF DATE 10/5/82
APPD. DATE
DSPEC (PROJECT NO.) DV89-1069
SCALE 1=3
G.O.

CUTLER-HAMMER
CLEVELAND, TENNESSEE
EATON

TITLE DIMENSION SHEET 30, 60, &100 AMP TYPE 1 & 3 3P & 4P

TYPE

SIZE C | DWG. NO. 95-955 | SHEET NO. 1 OF 1

DIMCFM REV. 5/15/98

Powering Business Worldwide

TYPE BR LOADCENTER RATINGS:

Ref: 96-3500, 96-3571, 96-3579, 96-3580, 96-3471, 96-3744

Enclosure:	Indoor NEMA 1
Incoming Main:	Type BR Main Breaker
Loadcenter Electrical Rating:	120/240 VAC, Single Phase
Bus Bar Ampere:	125 Amps Max
Number of Spaces & Circuits:	*See Table on Page 2*
Incoming Wire Range:	*See Table on Page 2*
Bus Bar Material:	Tin Plated Aluminum (Standard)
Trim Type:	Combination (Standard)
Trim Paint:	ANSI 61 Light Gray
Short Circuit Rating:	*See Branch Breaker Ratings*
Box Dimensions:	14.3"W x 3.9"D x "A" *(See Table on page 2)*

FEATURES:

Steel Backpan - For reliable breaker mounting.

Single keyhole mounting - One keyhole at top and bottom for mounting and leveling.

Split Neutral Bar Assembly - For better management of load wires.

Drywall marking on Enclosure - Indicates mounting depth for flush applications

Top or bottom feed - Acceptable for either top or or bottom applications.

Warranty - 10 year limited warranty on all BR Loadcenters and Breakers.

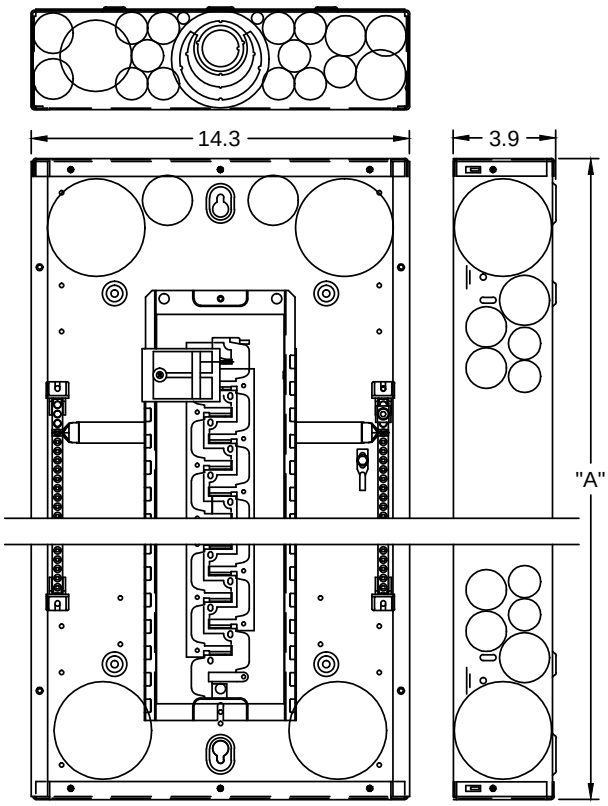

OPTIONAL ACCESSORIES:

Catalog Number	Description
GBK5	5 POS #14-4 Ground Bar
GBK10	10 POS #14-4 Ground Bar
GBK14	14 POS #14-4 Ground Bar
GBK21	21 POS #14-4 Ground Bar
NL20	Neutral/Ground Lug #2/0 max
BRFP	1" Filler Plate
BREQS125	Hold-down kit for Type BR breaker
BR230SUR	BR 2P 30A Circuit Breaker w/ Surge Protection
BRMIKBR	Generator Interlock Kit

TITLE	DRAFTER/DESIGNER	DATE (YYYY/MM/DD)
BR 1" LOADCENTER, BR MAIN BREAKER, INDOOR NEMA 1, 120/240 VAC, 1 PHASE	M. Egan	2014/06/27

EATON CORPORATION - CONFIDENTIAL AND PROPRIETARY
NOTICE TO PERSONS RECEIVING THIS DOCUMENT AND/OR TECHNICAL INFORMATION
THIS DOCUMENT, INCLUDING THE DRAWING AND INFORMATION CONTAINED THEREON, IS CONFIDENTIAL AND IS THE EXCLUSIVE PROPERTY OF EATON CORPORATION, AND IS MERELY ON LOAN AND SUBJECT TO RECALL BY EATON AT ANY TIME. BY TAKING POSSESSION OF THIS DOCUMENT, THE RECIPIENT ACKNOWLEDGES AND AGREES THAT THIS DOCUMENT CANNOT BE USED IN ANY MANNER ADVERSE TO THE INTERESTS OF EATON AND THAT NO PORTION OF THIS DOCUMENT MAY BE COPIED OR OTHERWISE REPRODUCED WITHOUT THE PRIOR WRITTEN CONSENT OF EATON. IN THE CASE OF CONFLICTING CONTRACTUAL PROVISIONS, THIS NOTICE SHALL GOVERN THE STATUS OF THIS DOCUMENT.
© 2014 Eaton Corporation, All Rights Reserved

SIZE	DRAWING NUMBER	REVISION
A	98-1080	001

UNLESS OTHERWISE SPECIFIED DIMENSIONS IN	SCALE	SHEET
INCHES	1=6	1 OF 2

DSD_AFM_PORT_ACAD_CUSTOMER.DWG

GO/NEG-Alt-Date:		Job Name:
MP510513X6K1-0000-4/21/2017		2017 MENARDS STORE GEAR
Item Number:	**Catalog Number:**	**Designation:**
	BR1220B100	Guard Shack Panel

EATON
Powering Business Worldwide

LOADCENTER DETAILS

Catalog #	Dim "A"	Main Brkr Amps	Spaces / Circuits	Bus Material	Wire Size Range Cu/Al 60°C or 75°C	Notes
BR816B100	16.75	100	8/16	Alum.	#4-1/0	
BR816B100P	16.75	100	8/16	Alum.	#4-1/0	
BR1020B100S11	16.75	100	10/20	Alum.	#4-1/0	Surface Mounted Trim
BR1020B100F11	16.75	100	10/20	Alum.	#4-1/0	
BR1020B100SRNV	16.75	100	10/20	Alum.	#4-1/0	Surface Mounted Trim
BR1020B100FRNV	16.75	100	10/20	Alum.	#4-1/0	
BR1020H100FRNWV	16.75	100	10/20	Alum.	#4-1/0	22 kAIC Rated Main Breaker
BR1020B100PKW	16.75	100	10/20	Alum.	#4-1/0	
BR1020B100PK	16.75	100	10/20	Alum.	#4-1/0	
BR1020B100GK	16.75	100	10/20	Alum.	#4-1/0	12 ground terminals included plus 2/0 lug
BR1212B100	18.75	100	12/12	Alum.	#4-1/0	
BR1212B10060	18.75	100	12/12	Alum.	#4-1/0	
BR1220B100PKW	18.75	100	12/20	Alum.	#4-1/0	
BR1220B100PK	18.75	100	12/20	Alum.	#4-1/0	
BR1220B100GK	18.75	100	12/20	Alum.	#4-1/0	12 ground terminals included plus 2/0 lug
BR1220B100P	18.75	100	12/20	Alum.	#4-1/0	
BR1220B100	18.75	100	12/20	Alum.	#4-1/0	
BR1220H100	18.75	100	12/20	Alum.	#4-1/0	22 kAIC Rated Main Breaker
BR1224B100SFG	18.75	100	12/24	Alum.	#4-1/0	Surface Mounted Trim; 14 ground terminals included plus 2/0 lug
BR1224B100PK	18.75	100	12/24	Alum.	#4-1/0	
BR1224B100PKW	18.75	100	12/24	Alum.	#4-1/0	
BR1224B100GK	18.75	100	12/24	Alum.	#4-1/0	12 ground terminals included plus 2/0 lug
BR1616B100	21	100	16/16	Alum.	#4-1/0	
BR1620B100	21	100	16/20	Alum.	#4-1/0	
BR1624H100W	21	100	16/24	Alum.	#4-1/0	22 kAIC Rated Main Breaker
BR1624B100	21	100	16/24	Alum.	#4-1/0	
BR1624B125	21	125	16/24	Alum.	#4-2/0	
BR2020B100P	23	100	20/20	Alum.	#4-1/0	
BR2020BC100	23	100	20/20	Cu.	#4-1/0	
BR2020HC100	23	100	20/20	Cu.	#4-1/0	22 kAIC Rated Main Breaker
BR2020B100	23	100	20/20	Alum.	#4-1/0	
BR2024H100	23	100	20/24	Alum.	#4-1/0	22 kAIC Rated Main Breaker
BR2024B125	23	125	20/24	Alum.	#4-2/0	
BR2040B125PKW	23	125	20/40	Alum.	#4-2/0	
BR2040B100	23	100	20/40	Alum.	#4-1/0	
BR3030BC100	29	100	30/30	Cu.	#4-1/0	
BR3030HC100	29	100	30/30	Cu.	#4-1/0	22 kAIC Rated Main Breaker
BR3030B125	29	125	30/30	Alum.	#4-2/0	
BR3030B100	29	100	30/30	Alum.	#4-1/0	

Note: Catalog Numbers may have additional characters at the end which describe alternate details, including but not limited to the following: S, F, W, G, GK, PK, PB, SF, RN, MI, V and #s. Contact sales for those specific details when necessary.

TITLE: BR 1" LOADCENTER, BR MAIN BREAKER, INDOOR NEMA 1, 120/240 VAC, 1 PHASE
DRAFTER/DESIGNER: M. Egan
DATE (YYYY/MM/DD): 2014/06/27

EATON CORPORATION - CONFIDENTIAL AND PROPRIETARY
NOTICE TO PERSONS RECEIVING THIS DOCUMENT AND/OR TECHNICAL INFORMATION
THIS DOCUMENT, INCLUDING THE DRAWING AND INFORMATION CONTAINED THEREON, IS CONFIDENTIAL AND IS THE EXCLUSIVE PROPERTY OF EATON CORPORATION, AND IS MERELY ON LOAN AND SUBJECT TO RECALL BY EATON AT ANY TIME. BY TAKING POSSESSION OF THIS DOCUMENT, THE RECIPIENT ACKNOWLEDGES AND AGREES THAT THIS DOCUMENT CANNOT BE USED IN ANY MANNER ADVERSE TO THE INTERESTS OF EATON AND THAT NO PORTION OF THIS DOCUMENT MAY BE COPIED OR OTHERWISE REPRODUCED WITHOUT THE PRIOR WRITTEN CONSENT OF EATON. IN THE CASE OF CONFLICTING CONTRACTUAL PROVISIONS, THIS NOTICE SHALL GOVERN THE STATUS OF THIS DOCUMENT.
© 2014 Eaton Corporation, All Rights Reserved

SIZE: A
DRAWING NUMBER: 98-1080
REVISION: 001
UNLESS OTHERWISE SPECIFIED DIMENSIONS IN INCHES
SCALE: 1=1
SHEET: 2 OF 2
DSD_AFM_PORT_ACAD_CUSTOMER.DWG

GO/NEG-Alt-Date:		Job Name:
MP510513X6K1-0000-4/21/2017		2017 MENARDS STORE GEAR
Item Number:	**Catalog Number:**	**Designation:**
	BR1220B100	Guard Shack Panel

Ratings

- Main Lugs
- 125 Amperes, 1-Phase, 3-Wire, 120/240V AC
- Tin-Plated Aluminum Bus Bar
- Interrupting Rating: 10 kAIC
- Spaces/Poles: 6/12
- Insulated/Bondable Neutral
- Enclosure Type: Indoor
- Trim Type: Flush no Door
- Paint Type: ANSI 61 Light Gray Finish
- Incoming Wire Range: #14 – #1, Cu/Al 60 or 75°C

Notes

1. Ground bar kits priced separately.
– For 2/4 circuit loadcenters use GBK5 or GBK520 Ground Bar.
– For 4/8, 6/12 and 8/16 circuit loadcenters use GBK10 Ground Bar.
– Ground bars mount to the left side wall of the enclosure for the 4/8, 6/12 and 8/16 circuit loadcenters.

2. Suitable for use as service equipment when a main breaker is used or when not more than six service disconnecting mains are provided and when not used as a lighting and appliance panelboard.
(see Article 384-14 of the NEC.)

Knockouts

Code	Diameter in Inches				Diameter in mm			
A	1/2	—	—	—	12.7	—	—	—
B	1/2	3/4	—	—	12.7	19.0	—	—
C	1/2	3/4	1	—	12.7	19.0	25.4	—
D	1/2	3/4	1	1-1/4	12.7	19.0	25.4	31.7
E	3/4	1	1-1/4	—	19.0	25.4	31.7	—
F	3/4	1	1-1/4	1-1/2	19.0	25.4	31.7	38.1
G	1	1-1/4	1-1/2	—	25.4	31.7	38.1	—
H	1	1-1/4	1-1/2	2	25.4	31.7	38.1	50.8
I	1-1/4	1-1/2	2	—	31.7	38.1	50.8	—

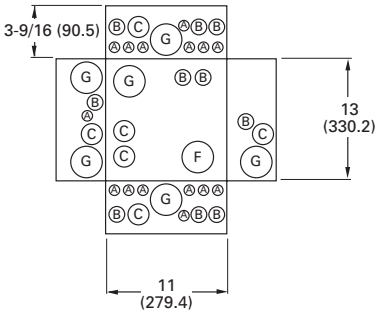

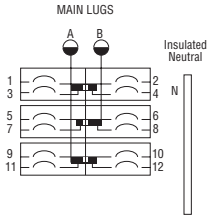

Reference DWG # 96-4781

Dimensions in Inches (mm)

THE INFORMATION ON THIS DOCUMENT IS CREATED BY CUTLER-HAMMER. IT IS DISCLOSED IN CONFIDENCE AND IS ONLY TO BE USED FOR THE PURPOSE IN WHICH IT IS SUPPLIED.	PREPARED BY DATE		Cutler-Hammer	PITTSBURGH, PA	
	APPROVED BY DATE		JOB NAME DESIGNATION		
	VERSION		TYPE BR612L125FP	DRAWING TYPE	
NEG-ALT NUMBER	REVISION	DWG SIZE	G.O.	ITEM	SHEET

GO/NEG-Alt-Date: MP510513X6K1-0000-4/21/2017		Job Name: 2017 MENARDS STORE GEAR
Item Number:	Catalog Number: BR612L125FP	Designation: Elevator Panel